INSTRUCTIONS AND PARTS LIST

SCOTCH BRAND CATALOG NO. S-609

BOX SEALER

MODEL 674

SERIAL NOS. XXXX 3001 AND ABOVE

34-7004-7019-7B

SUPPLEMENT INSTRUCTIONS AND PARTS LIST FOR "SCOTCH" BRAND CAT. NO. S-609, MODEL 674 BOX SEALER

S-609 Box Sealers, serial nos. XXXX3320 and above are now equipped with the P/N 78-8011-6860-6 Stainless Steel Bed shown at the back of this instruction manual.

The replacement parts listed below replace the standard wooden bed components in the manual parts list. Refer to the "Parts Order and Service Information" section for order information.

REPLACEMENT PARTS LIST

P/N 78-8011-6860-6 STAINLESS STEEL BED - MODEL 174

Part Number	Description
78-8011-7328-3	Bed, Center Front
78-8011-6647-7	Bed, Side
78-8011-7327-5	Bed, Center Rear
78-8011-6858-0	Studs
78-8011-6859-8	Block, Carriage Bar Mounting
18-3154-6403-4	Screw, Cap Hex. Hd. 1/2-20 x 3/4 Lg.
70-8653-9502-7	Nut, Self Locking 1/4-20
18-3174-7615-0	Screw, Cap Soc. Hd. 1/4-20 x 1-1/2 Lg.
18-3174-8015-2	Screw Cap Soc. Hd. 1/4-20 x 1-3/4 Lg.

IMPORTANT NOTICE TO PURCHASER: The only obligation of the manufacturer and seller of "SCOTCH" Brand equipment shall be to repair or replace any mechanical part proved to be defective, provided the defect occurs within 90 days after date of purchase, and the so-purchased item is returned immediately to the 3M factory or to an authorized service station designated by the manufacturer.

Neither manufacturer nor seller shall be liable for any loss or damage, direct or consequential, arising out of the use or inability to use the "SCOTCH" Brand equipment. No statement or recommendation not contained herein shall have any force or effect unless in an agreement signed by officers of seller and manufacturer.

Packaging Systems Division 3M COMPANY

34-7004-7056-9A(35.1)R2

INSTRUCTION MANUAL

S-609 Model 674

TABLE OF CONTENT — PAGE

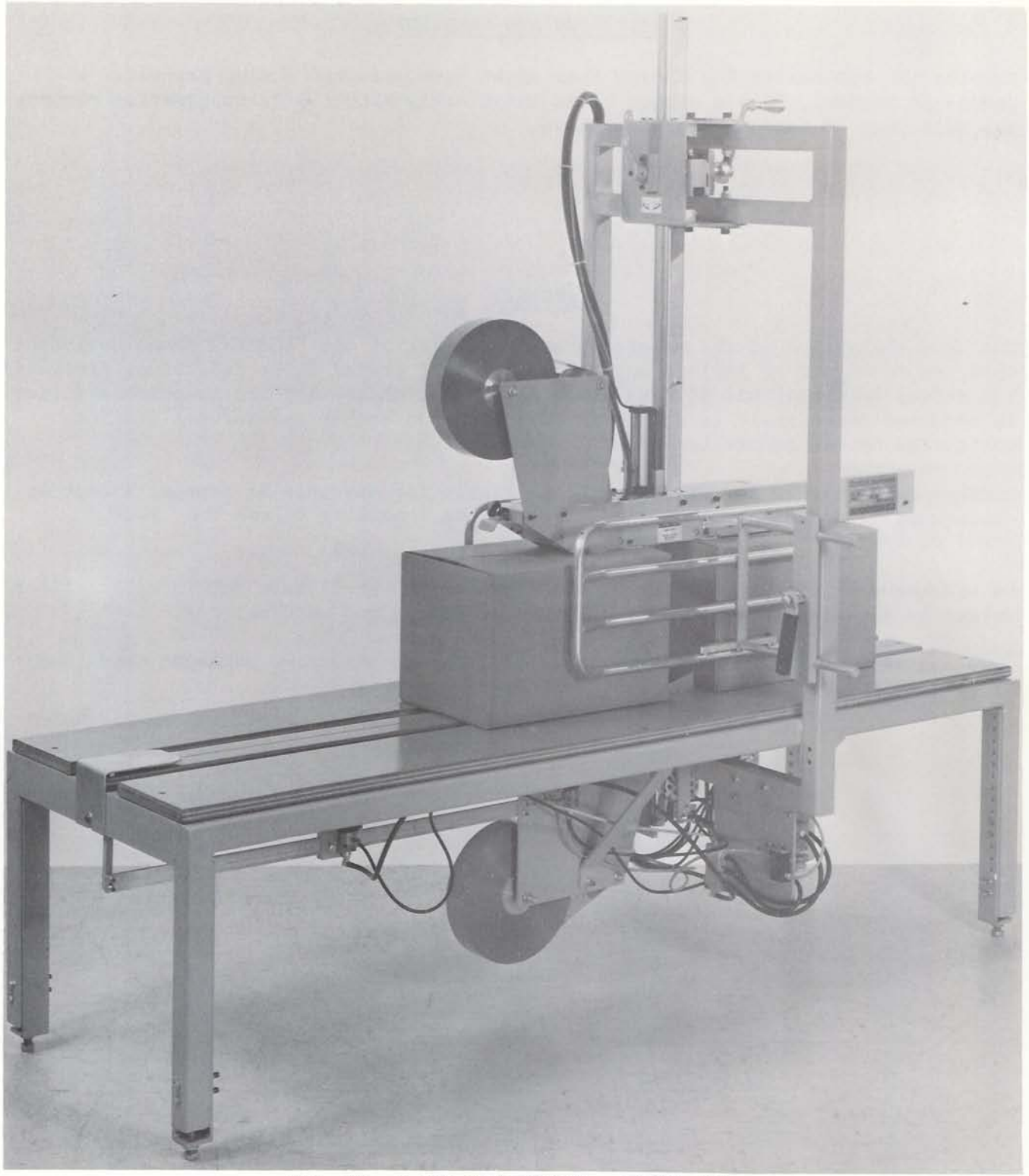

CAT. NO. S-609 BOX SEALER - MODEL 674
(Showing Typical Application)

DESCRIPTION

The Cat. No. S-609 Box Sealer is designed to apply a C-Clip of tape to the top and bottom center seam of a regular slotted container. The tape is automatically cut and buffed onto the box. The S-609 will handle a variety of box sizes with one box size per set-up. See box size specifications.

The S-609 also provides a platform area (26 inches wide x 37 inches in direction of box movement) that may be used for box filling prior to the sealing operation.

RECEIVING AND HANDLING

Examine the box sealer for damage that might have occurred during transit. If damage is evident, file a damage claim immediately with the transportation company and also your 3M Company representative.

WARRANTY

The only obligation of the manufacturer and seller of the "SCOTCH" Brand equipment shall be to repair or replace any mechanical part proved to be defective, provided the defect occurs within 90 days after date of purchase, and the so-purchased item is returned immediately to the 3M factory or to an authorized service station designated by the manufacturer.

Neither manufacturer nor seller shall be liable for any loss or damage, direct or consequential, arising out of the use of or the inability to use the "SCOTCH" Brand equipment.

No statement or recommendation not contained herein shall have any force or effect unless in an agreement signed by officers of seller and manufacturer.

"SCOTCH" is a registered trademark for the pressure-sensitive adhesive tapes and dispensers of 3M Company, St. Paul, Minnesota 55101.

SPECIFICATIONS

1. Air Requirements:

50 - 60 P.S.I.G. [446.-515.kPa], 13.0 SCFM [22.09m^3/h] at maximum cycle rate. A pressure regulator-filter-lubricator combination is included with the S-609.

2. Machine Dimensions:

	Maximum	Minimum (Shipping Size)
a. Length	79 inches [2.0 m]	79 inches [2,0 m]
b. Height	105 inches [2.7 m]	71 inches [1.8 m]
c. Width	51 inches [1.3 m]	30 inches [[762.0 mm]
d. Weight	425 pounds [193 kg] (uncrated)	
	675 pounds [307 kg] (uncrated)	

Operating Platform Height: 21 inches [533.4 mm] (without extended legs).

21-1/2 [572 mm] minimum to 36-1/2 [927.1 mm] maximum in one inch [25.4 mm] increments (with extended legs).

3. Operating Rate:

Up to 15 boxes per minute depending on box size, weight and operator capability.

4. Operating Conditions:

Use in dry, relatively clean environments at 40° to 120° F [4° to 49° C] with clean, dry boxes.

Machine should not be washed down or subject to conditions causing moisture condensation on components.

5. Tape: For use with "SCOTCH" Brand Pressure-Sensitive Box Sealing Tapes.

6. Tape Widths: 1-1/2 inch or 36 mm minimum to 2 inch or 48 mm maximum.

7. Tape Roll Diameter:

Up to 13.5 inches [343 mm] maximum on a 3 inch [76.2 mm] core. (Accommodates "SCOTCH" Brand Film Tapes - 1,000 yard rolls.)

8. Box Board: 125 - 275 pound test single wall, A, B or C flute.

9. Box Size and Weight Operational Capabilities:

Box Weight Capacity (filled)
a. Weight up to 65 lbs. [30 kg] maximum

Box Size Capacity (outside box dimensions)
b. Length 6 inches [152 mm] minimum to 26 inches [660 mm] maximum
* c. Height 5 inches [127 mm] minimum to 24 inches [610 mm] maximum
d. Width 6 inches [152 mm] minimum to 24 inches [610 mm] maximum

NOTE: The S-609 can accommodate most boxes within the size range listed above. A box length to box height ratio of .58 or greater must be observed for proper machine performance. Determine the box limitations by completing this formula:

$$\frac{\text{BOX LENGTH IN DIRECTION OF SEAL}}{\text{BOX HEIGHT}} \quad \text{MUST BE GREATER THAN} \quad .58$$

Any box ratio approaching this limitation should be test run to assure performance.

* Do not attempt to run boxes less than 5 inches [127.0 mm] in height. This may cause interference and possible damage to upper and lower cut-off blades.

10. Contact your 3M Company representative for application requirements outside the above recommended specifications.

INSTALLATION INSTRUCTIONS

PLATFORM HEIGHT: Refer to Figure 1

The S-609 is supplied with four leg extensions which provide platform height adjustment, to accommodate existing product handling equipment. Set the S-609 platform height as follows:

1. Block up the S-609 frame to obtain the desired platform height.
2. Lower each leg extension to within one inch above the floor. Tighten the leg bolts and nuts to secure the leg extensions.
3. Adjust each leg extension leveling pad as needed to level the S-609 and tighten the jam nuts to secure the pad.
4. Remove the S-609 block supports.

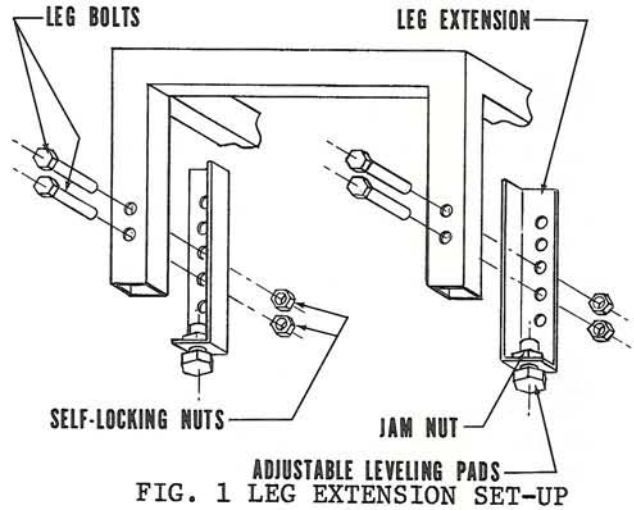

FIG. 1 LEG EXTENSION SET-UP

AIR PRESSURE LINE: (Refer to Figure 2) The air lubricator-regulator-filter, SUPPLIED WITH THE S-609, is located on L/H side connected to frame under the operating platform. The air filter has 3/8 NPT male threads for connecting up to the main air line. (The air line and fittings are to be supplied by the customer.) Before connecting the air supply, remove oil filler cap and completely fill the lubricator bowl with SAE #5 NON-DETERGENT oil or light weight spindle oil rated 100 SSU at 100°F supplied with S-609. Replace and secure oil filler cap. (For fast volume filling, use quick disconnect feature for filling directly into bowl.)

Remove all tools and hardware from the S-609 that could cause damage when the air cylinders are energized and with the ON-OFF valve (see figure 3) in "OFF" position, connect the main air supply.

Refer to the air requirements specifications for the correct air pressure and check the regulator setting. After the air hook-up is complete, disconnect the main air supply and remove the tape securing the top cut and buff assembly.

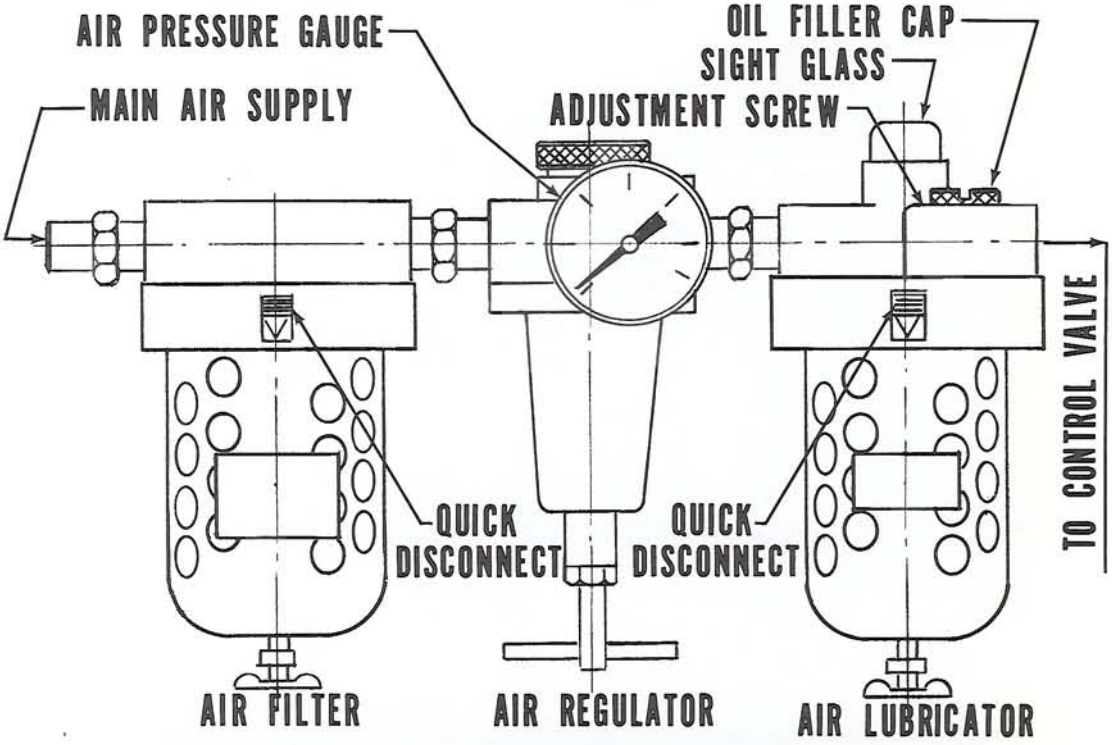

FIGURE 2 - AIR LUBRICATOR-REGULATOR-FILTER

SET-UP INSTRUCTIONS

C A U T I O N - The S-609 taping head contains extremely sharp cut-off knives. Use care in machine set-up.
Set "ON-OFF" valve in "OFF" position and disconnect main air supply.

BOX HOLDER - Refer to figure 3
The box holder (A) located at the input end of the S-609 operating platform, provides a means for holding a regular slotted container for filling, prior to the sealing operation.
If the box holder interferes with the product handling system installation, it can be removed by loosening the retaining screw (AA) and lifting up on the holder. Tighten the screw to secure the under carriage bar.

SIDE GUIDES - (Preliminary set-up)
Refer to Figure 3. Loosen, but do not remove, the clamp locking handles (B) holding each side guide (B-B). Slide the side guides apart to the maximum open position.

TOP TAPING HEAD - (Preliminary set-up)
Refer to Figure 4. Rotate the clamp handle (C) to loosen the top taping head. DO NOT REMOVE HANDLE OR LOOSEN OTHER FASTENERS ON THE CROSSBAR. Turn the crank handle (C-C) to raise the top taping head so the hold down ski (D) is about 2 inches above the proposed box height and secure the clamp handle (C).

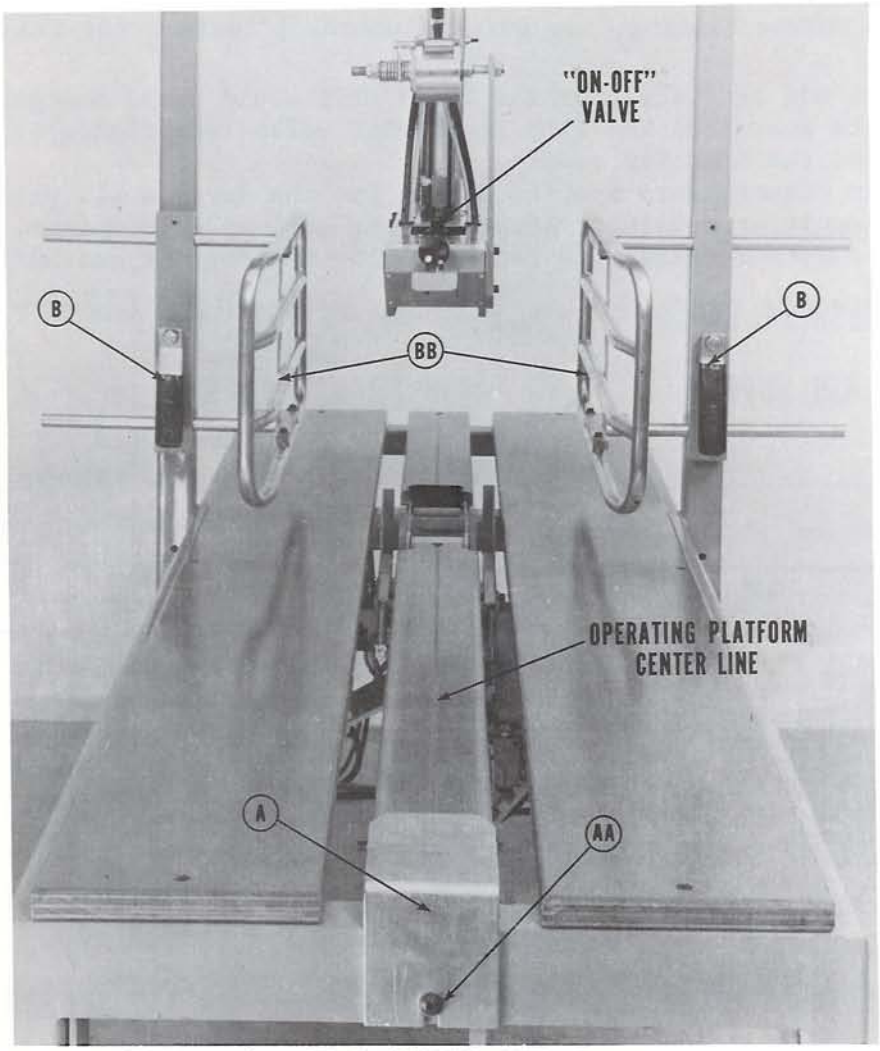

FIGURE 3 - SIDE GUIDES SET-UP - END VIEW

NOTE - Set "ON-OFF" valve in "OFF" position and disconnect main air supply. Use care in machine set-up.

BOX WEIGHT:
Refer to box overtravel section of this manual when product filled boxes weighing more than 15 lbs. are to be run.

BOX HEIGHT: (Refer to Figure 4)
Set-up and fold the flaps down on enough product filled boxes to cover the area beneath the hold down ski. Place the boxes on the platform with the box center seam in line with operating platform center line (see figure 3). Position enough boxes in line to cover the length of the hold down ski (D) as shown. Lower the top taping head to within 1/16 to 1/8 inch above the boxes and tighten the clamp handle (C) to secure the top taping head.

BOX WIDTH: (Refer to Figure 4)
With the product filled boxes centered on the operating platform center line, position and secure each side guide (B-B) to allow the boxes to move forward freely without side movement. NOTE: THE SIDE GUIDES ARE NOT INTENDED TO BE USED TO CLOSE THE FLAPS OF OVERFILLED BOXES.

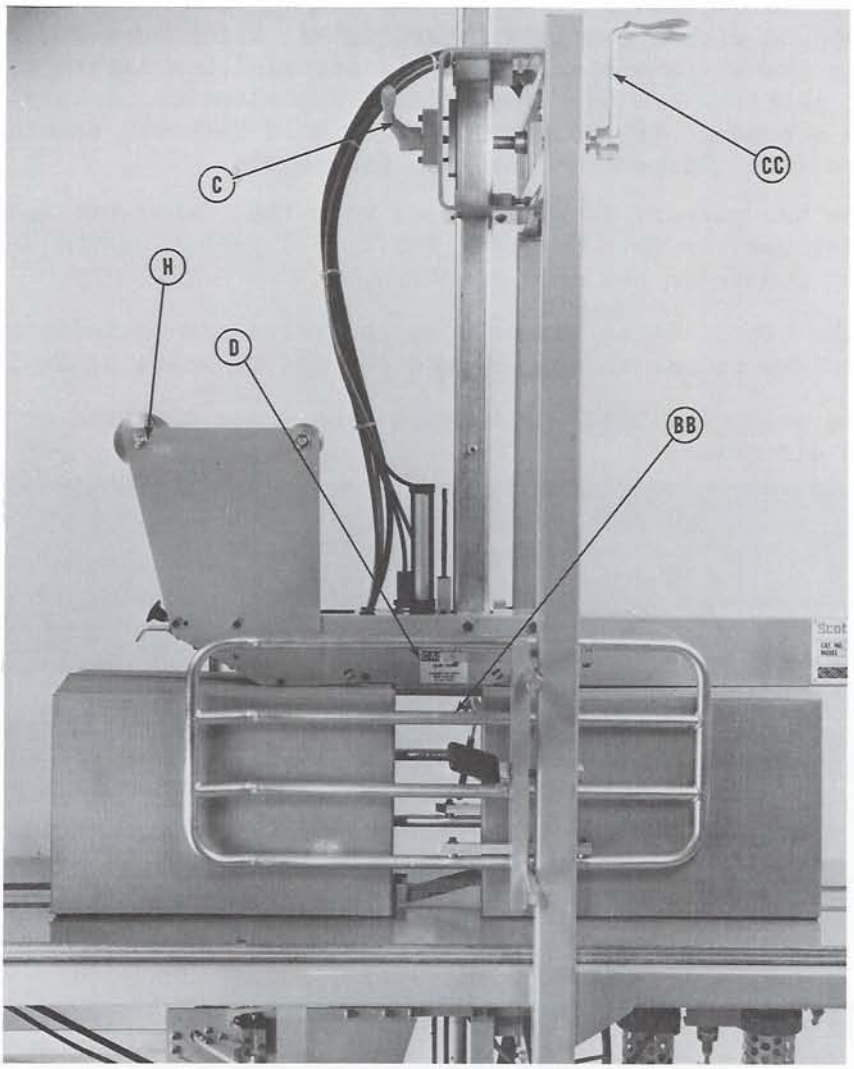

FIGURE 4 - TOP TAPING HEAD & HOLD DOWN SKI - RIGHT SIDE VIEW

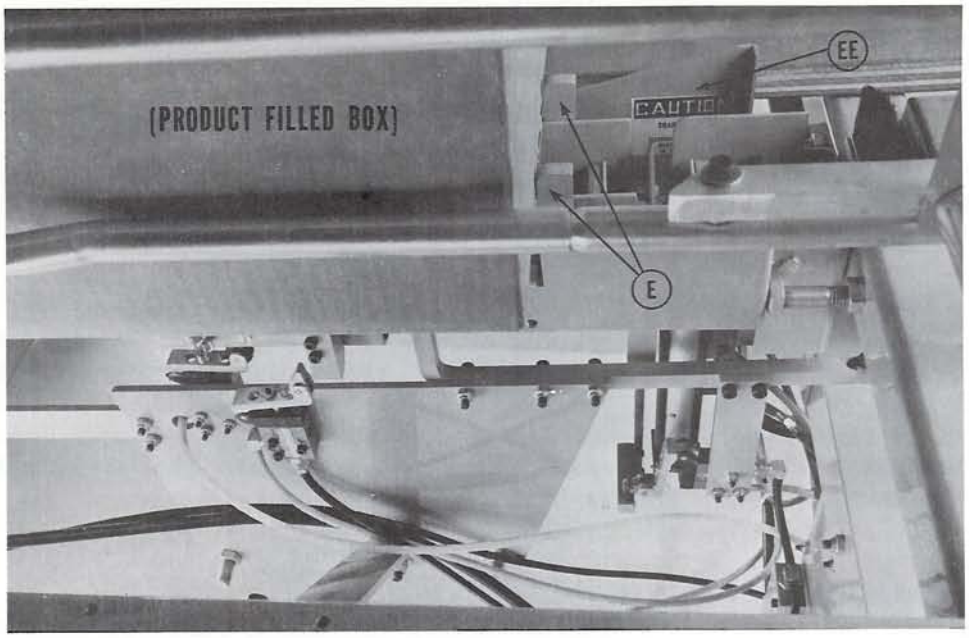

FIGURE 5 BOX STOP BOX PUSHER
(One Platform Bed Removed - Right Side View)

BOX LENGTH: Refer to figures 5 & 6.
The S-609 is equipped with a carriage return valve, which must be positioned as follows to obtain the minimum operating cycle for each box length used. (A section of the operating platform has been removed for illustration clarity.)

1. Position a product filled box under the hold down ski squarely against the box stops (E). Disconnect the main air supply.
2. Press the box pushers (E-E) down and move the undercarriage assembly backward under the box to a position 1-1/2 to 2 inches behind box as shown. (Box must remain in box stop position.)
3. Locate the return valve assembly so the valve arm is fully actuated by the undercarriage cam as shown. Secure the return valve assembly position.
4. Slide the product filled box forward from under the hold down ski. Connect the main air supply.

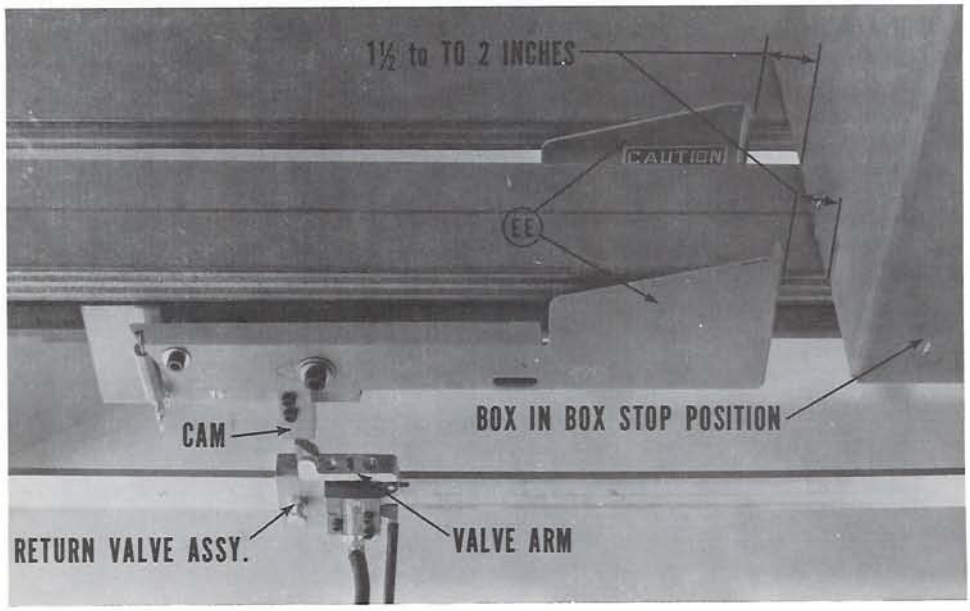

FIGURE 6 CARRIAGE RETURN VALVE
(One Platform Bed Removed - Right Side View)

NOTE: Set "ON-OFF" valve in "OFF" position and disconnect main air supply. Use care in machine set-up.

For better access to "ON-OFF" valve when the S-609 is set-up for operating from the right side, the tape roll mounting bracket assembly can be relocated on the left side of the hold down ski.

TAPE ROLL LOADING: (Refer to Figure 7.)

Turn the clamp pin, located on the upper tape drum (F-F), in against the center compression spring. Place one tape roll fully onto the upper tape drum so the tape is dispensed over the tension roller (G-G) as shown, adhesive side down. Turn the clamp pin out to secure the tape roll on the drum.

Install a tape roll onto the lower tape drum (F) in the same manner so the tape is diapensed around the tension roller (G), as shown, adhesive side up. Turn the clamp pin out, as shown, to secure the tape roll on the upper drum.

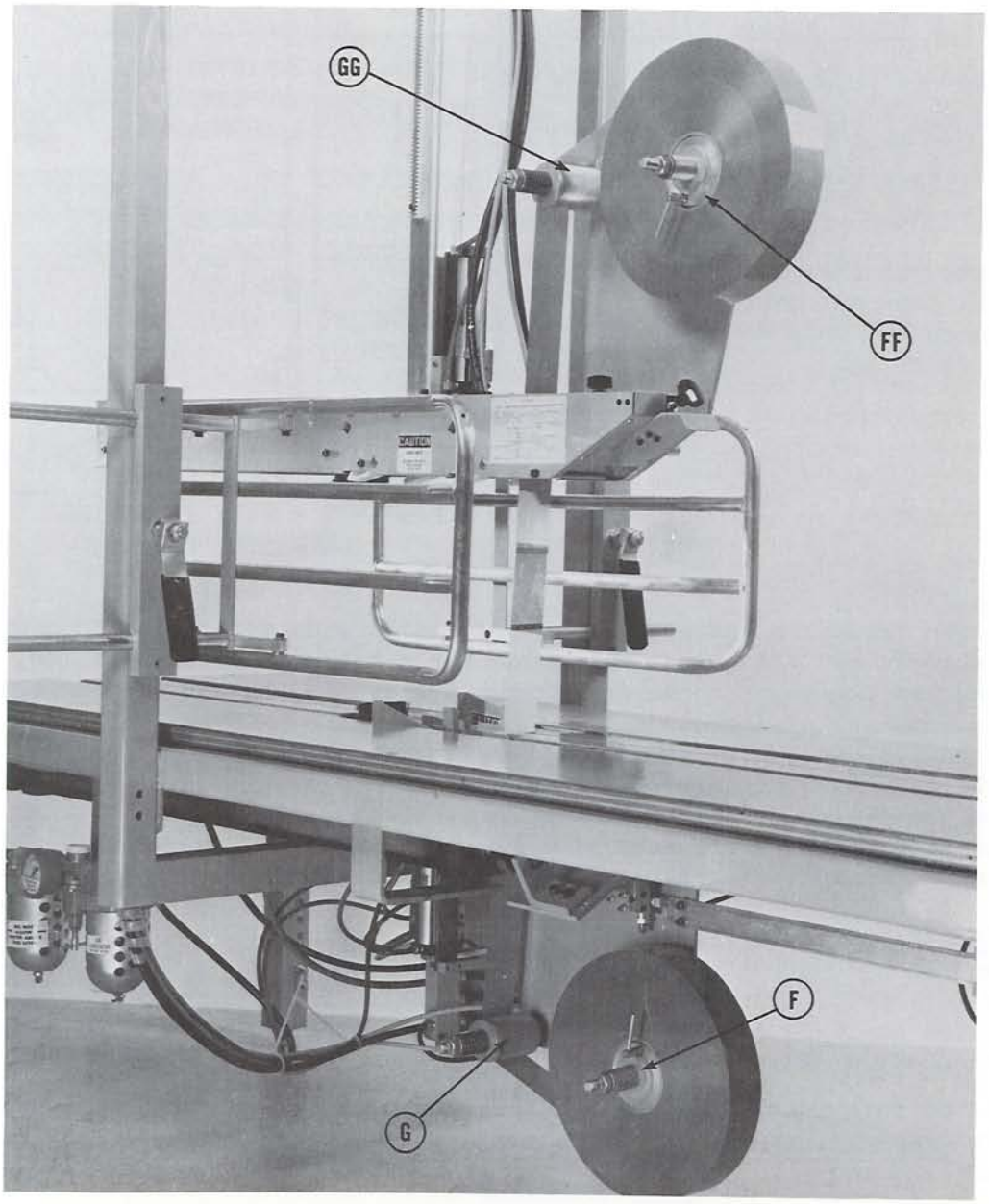

FIGURE 7 - TAPE ROLL LOADING - LEFT FRONT VIEW

SET-UP INSTRUCTIONS (CONTINUED)

NOTE - Set "ON-OFF" valve in "OFF" position, and disconnect main air supply Use care in machine set-up.

TAPE THREADING: (Refer to Figure 8)

1. Pull tape from the upper tape roll supply and around the tension roller.

2. Thread the tape downward through the hold down ski in front of guide roller to the platform.

3. Fold the tape end, adhesive side in, to form a 6 - 8 inch tab.

4. Thread the end tape tab down between the platform and lower guide roller.

5. Pull tape from the lower tape roll supply around the lower tension roller and make a 2 - 3 inch tape overlap with the upper tape tab to form a continuous tape web.

6. Rewind the tape web onto the upper tape roll until the tape web overlap is centered between the hold down ski and platform as shown.

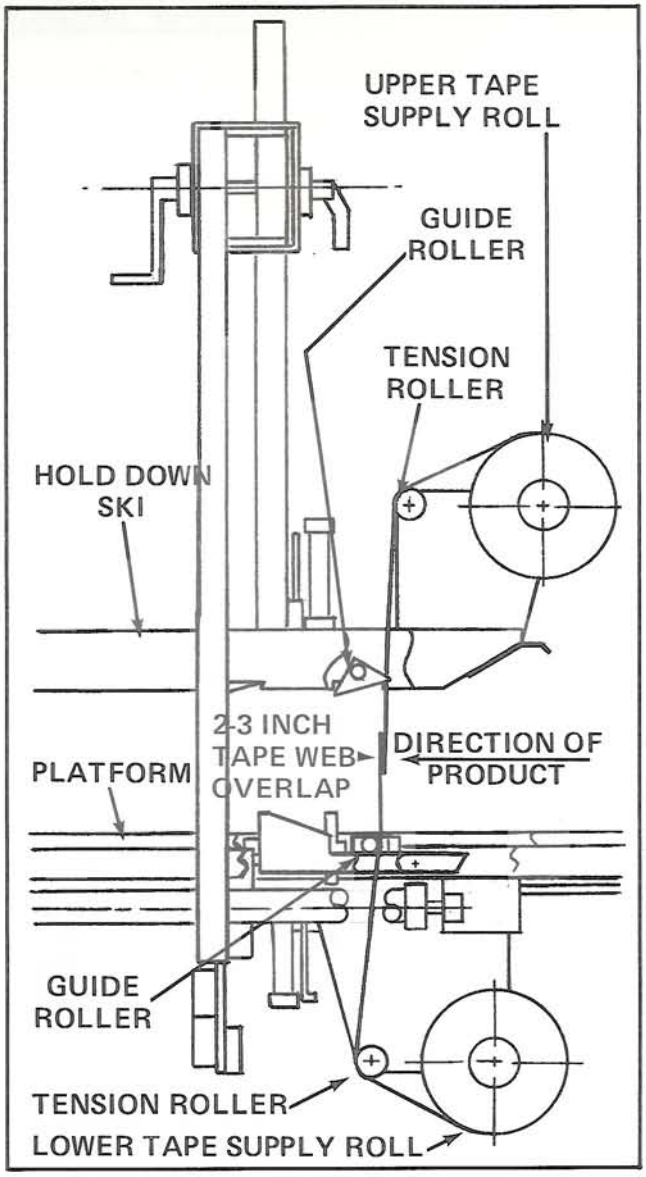

FIGURE 8 - TAPE THREADING
LEFT SIDE VIEW

TAPE WEB ALIGNMENT:
The upper and lower tape drum assemblies are pre-set to accommodate two inch wide tape and adjustable to provide proper alignment for all tape widths specified. If further adjustment is necessary to center the tape width on the box flap center seam, make the following adjustments:

1) Loosen but do not remove the tape drum jam nut (H, figure 4).
2) Turn the drum shaft to center the tape.
3) Tighten the jam nut to secure the drum assembly.

Adjust the lower tape width in the same manner.
The upper and lower tension rollers require no tape alignment adjustment.

TAPE WEB TENSION: (Refer to figure 7)
The tape web tension is controlled by the adjustment lock nut on each tension roller assembly (G & G-G). The tension has been pre-set for 2 inch wide tape to prevent tape web sag. To obtain proper tape web tension for other tape widths, make the following adjustments:

1) Adjust the lock nut, as needed, on each tape drum assembly (F & F-F) to prevent tape overtravel. DO NOT attempt to adjust the tape tension from this adjustment.

2) Adjust the lock nut as needed on each tension roller assembly to prevent tape web sag between boxes prior to the operating cycle. This setting normally will compress the spring to 1-5/8 inch length.

OPERATION

TEST RUN: Connect the main air supply and turn the "ON-OFF" valve to "ON" position to ready the S-609 for operation. Run several product filled boxes through to test the set-up. Refer to and follow the operating steps. Check the tape alighment (on top and bottom seams) and the tape web tension. Make the necessary adjustments.

STEP 1 - A box is shown in the discharge position of the machine (at right) to illustrate the fact that Polyester Box-Sealing Tape is laminated over the center seam of the box and connected to the tape roll, top and bottom. The packer sets up and fills the box in the filling position (at left).

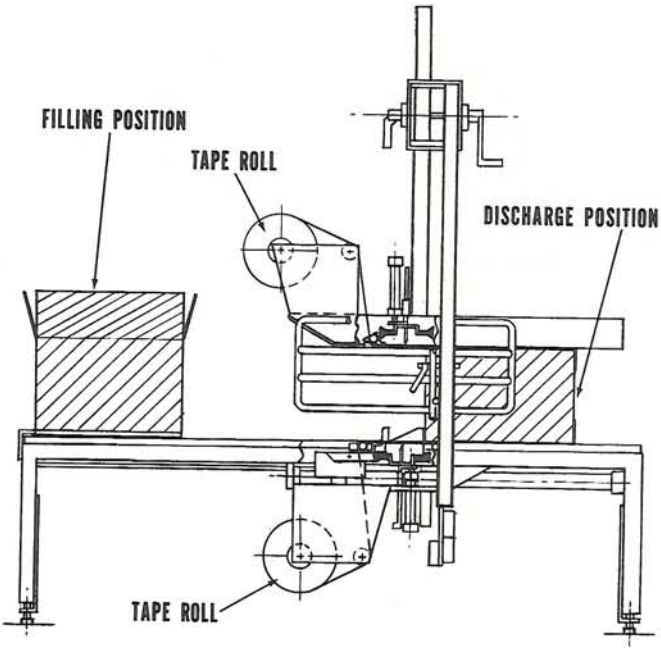

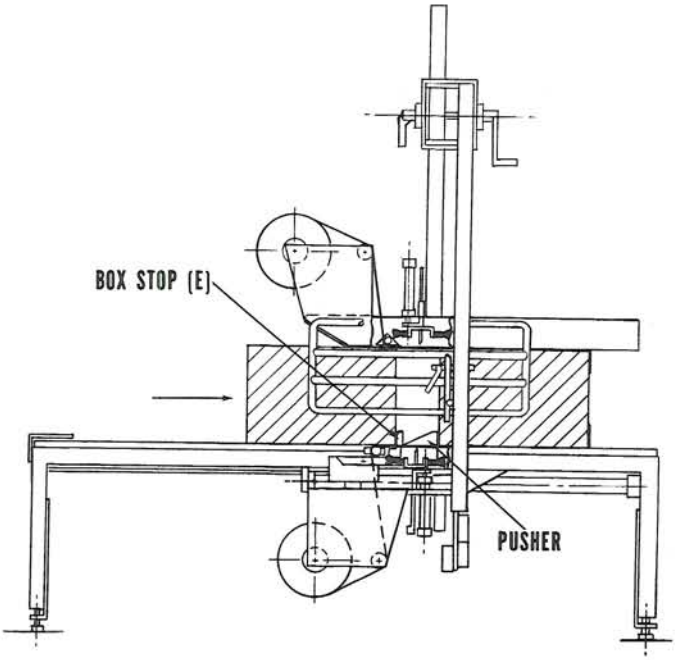

STEP 2 - After filling the box, the packer folds the flaps and slides it forward under the hold down ski until it contacts the box stop (E). Thus a bridge of tape has been established between the box in the discharge position and the box in the infeed position. The packer then actuates the cycle button (J, Figure 7) to start the sealing cycle of the S-609.

STEP 3 - When the S-609 is activated, the upper and lower air cylinders actuate in sequence, moving the cut and buff heads through the middle of the tape bridge that has been established between the two boxes. The tape is cut with one end, brush-wiped to the back of the leading box and one end to the front of the trailing box. The box feed air cylinder then cams the pusher downward under the infeed box and moves it toward the rear of the machine.

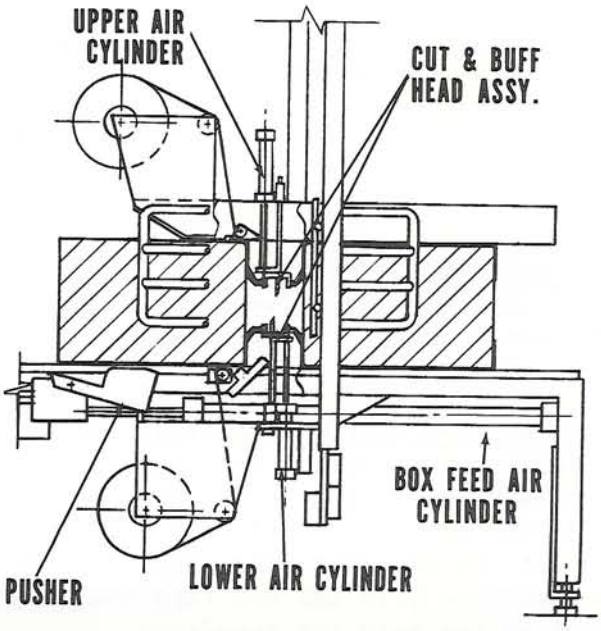

STEP 4 - When the pusher assembly reaches the return valve assembly at the input end of the S-609, it reverses its direction and pushes the infeed box through the machine. This laminates tape over the center seams of the infeed box, top and bottom, stripping it from the respective supply rolls. The taped box, which was in the discharge position, is moved out by being pushed by the infeed box.

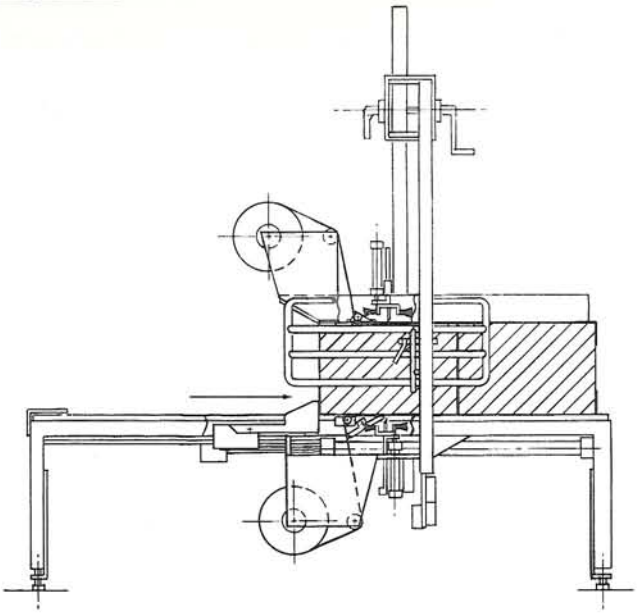

STEP 5 - The infeed box (formerly shown as STEP 2) is now the discharge box with tap laminated over the center seam, top and bottom. This re-established the bridge of tape between the discharge box and the tape roll. A new infeed box is shown and the S-609 is ready for the next cycle.

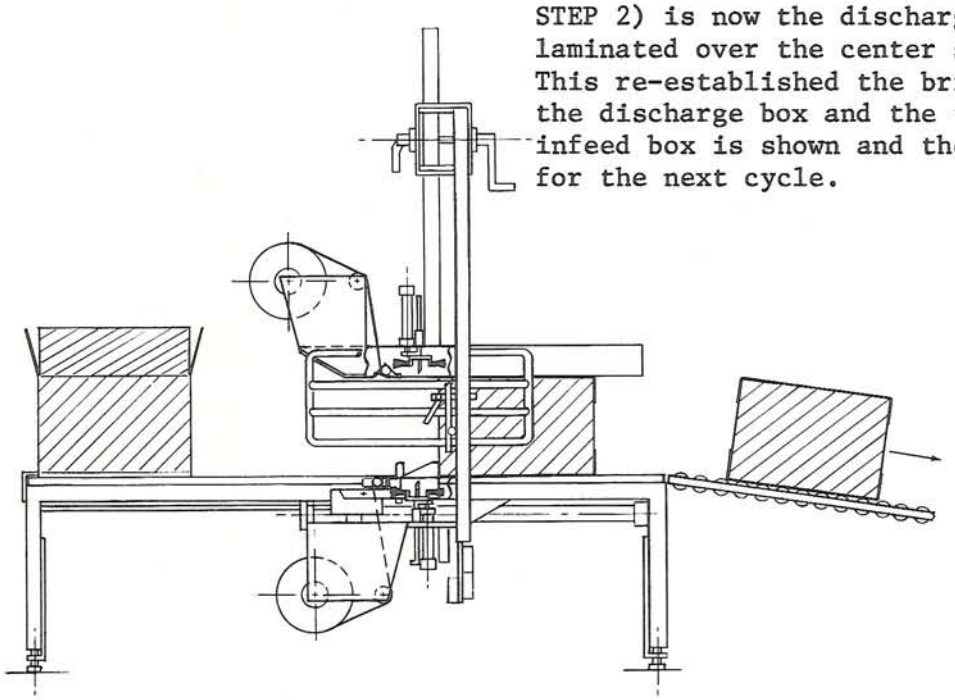

6. BOX JAM DURING THE OPERATING SEQUENCE: Turn the "ON-OFF" valve to "OFF" position and clear the jam. Cycle the S-609 once without boxes and if necessary, join the two tape ends together with a two inch overlap.

7. LAST BOX APPLICATION: Acutate the cycle button to complete the last box sealing application and clear the box from the S-609.
   Tack the lower loose tape end to the top of the platform and rewind the other tape end onto the upper tape roll.
   To run the next box size, turn off the main air supply, follow the set-up procedures, join the two tape ends together again with a 2 inch overlap and turn on the main air supply.

ADJUSTMENTS

PUSHER STOP: (Refer to Figure 9)

NOTE: DISCONNECT MAIN AIR SUPPLY.

1. Make sure the side guides and the top head are adjusted properly.

2. Bring carriage assembly forward so that pushers are against pusher stops. Adjust left pusher stop so that distance between front of left box pusher and flat side of blades is 2.50 ± .06. Repeat above procedure for right pusher stop.

3. With pushers firmly against pusher stops, adjust box stop cam on left side so that distance between front of box pushers and rear surface of box stops is 5.00 ± .06.

4. Adjust stop screw on left side so that top of box stops move .010 to .030.

5. Tighten and secure all pusher stop adjustments.

6. Remove all tools and connect the main air supply.

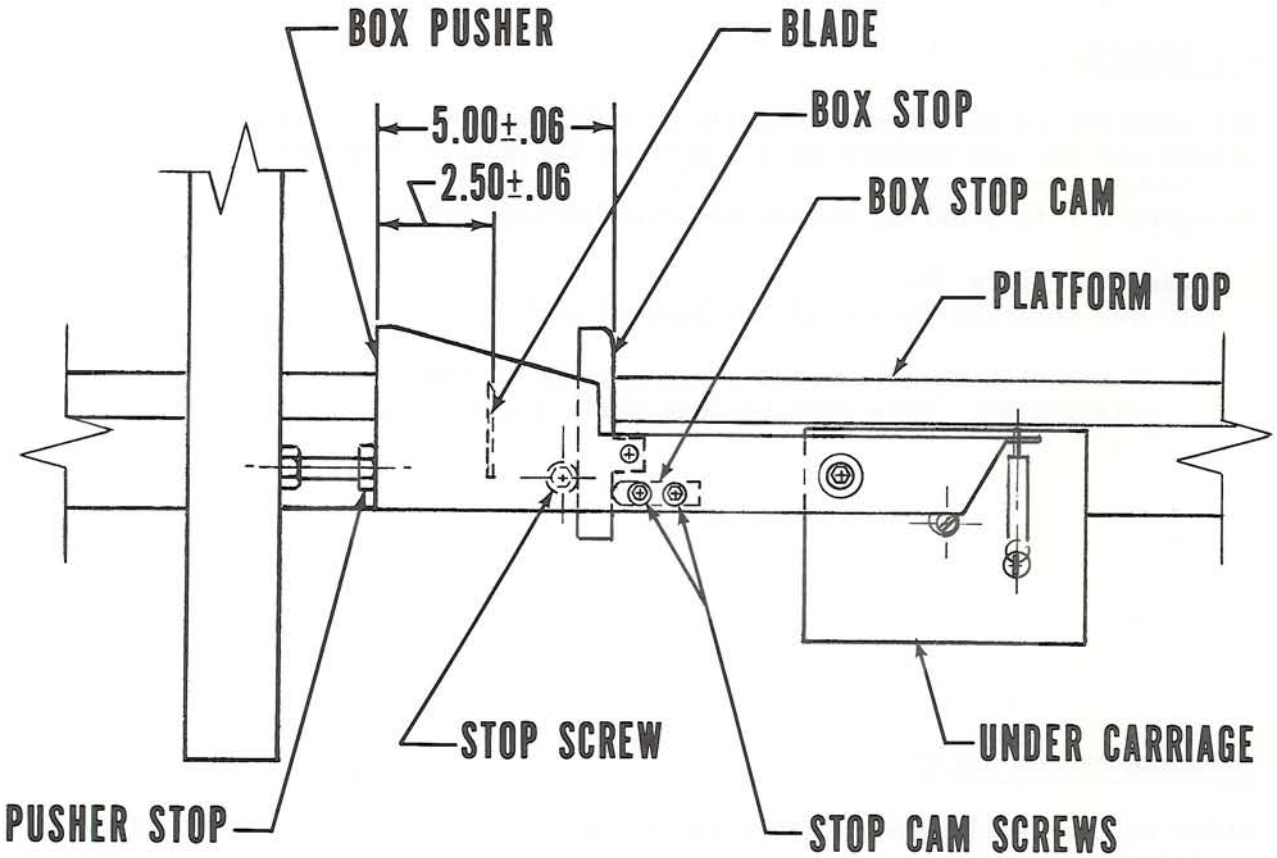

FIGURE 9 PUSHER STOP ADJUSTMENT - LEFT SIDE VIEW.

BOX OVERTRAVEL:

Box overtravel may occur during the tape applications to product filled boxes weighing more than 15 lbs. Overtravel can be recognized when a gap exists between the flat side of the pusher ends and the box after it has been pushed through the S-609.

To correct this problem, follow the instructions below.

Refer to Figure 10.

1. The metering device (1) is located on V-3 valve.

2. Adjust metering device one notch clockwise until box overtravel is eliminated. This must be done while running product filled boxes.

BOX UNDERTRAVEL:

Box undertravel occurs when the pusher cylinder does not complete the return stroke and the box pushers do not contact the pusher stops to complete the cycle.

To correct this problem, follow the instructions below.

Refer to Figure 10.

1. The metering device (1) is located on V-3 valve.

2. Turn metering device one notch counter clockwise until box undertravel is eliminated. This must be done while running product filled boxes.

CARRIAGE RETURN VALVE:

Refer to Section I Set-Up Instructions - Box Lengths and follow the adjustment procedure.

AIR CYLINDER CONTROL VALVES:

The air cylinder control valves are equipped with metering devices to control the air cylinder speed. The metering devices have been pre-set and require no further adjustment.
Should a cylinder or valve be replaced, the air flow must be adjusted to obtain:
12 - 14 cycles/minute operation with carriage return valve positioned for the maximum operating cycle.

REFER TO FIGURE 10 AND ADJUST THE METERING DEVICES AS NEEDED TO OBTAIN PROPER PERFORMANCE.

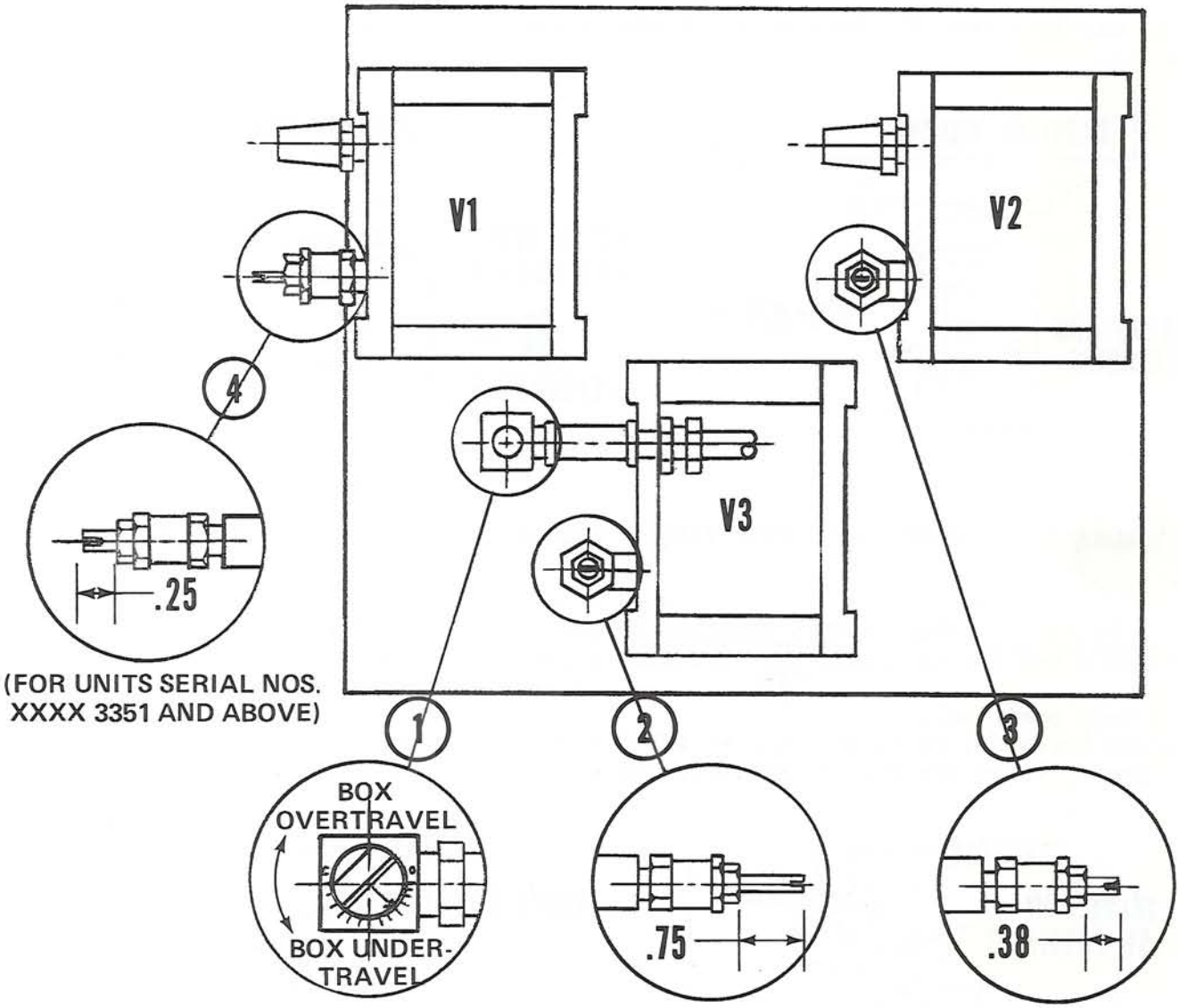

FIGURE 10 - AIR VALVE CONTROL PANEL - OUTPUT END VIEW

FLOW CONTROL ADJUSTMENTS

1. Controls pusher cylinder cushion - Box Overtravel - Box Undertravel.

2. Controls outward stroke of pusher cylinder.

3. Controls extension of lower cut and buff cylinder.

4. Controls extension of upper cut and buff cylinder.

REFER TO FIGURE 14 FOR S-609, MODEL 674, PNEUMATIC CIRCUIT.

The cushion, reset carriage return and pusher cylinder valves have been pre-set and require no further adjustment. Should a replacement be required, make adjustments as noted below. DISCONNECT THE MAIN AIR SUPPLY TO S-609 BEFORE REPLACEMENT.

CUSHION VALVE - Refer to Figures 11 & 11A

1. Adjust screw (M) to obtain .035 ± .025 dimension between top of valve roller and bottom of carriage.
2. Adjust screw (N) to obtain $\frac{.000}{.030}$ clearance between adjusting screw (M) and plunger on valve.
3. Pull carriage assembly over valve to assure valve arm is bottoming valve plunger.

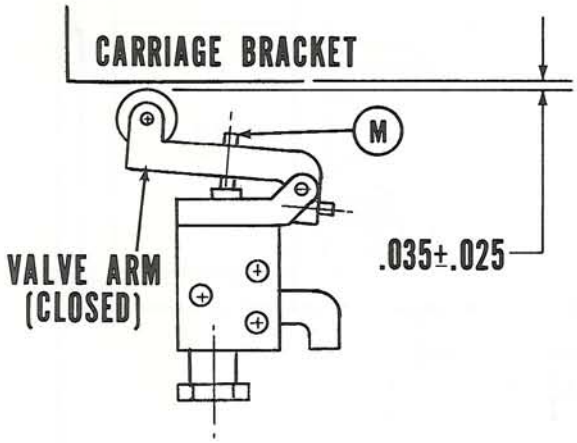

FIGURE 11 - CUSHION VALVE-SIDE VIEW

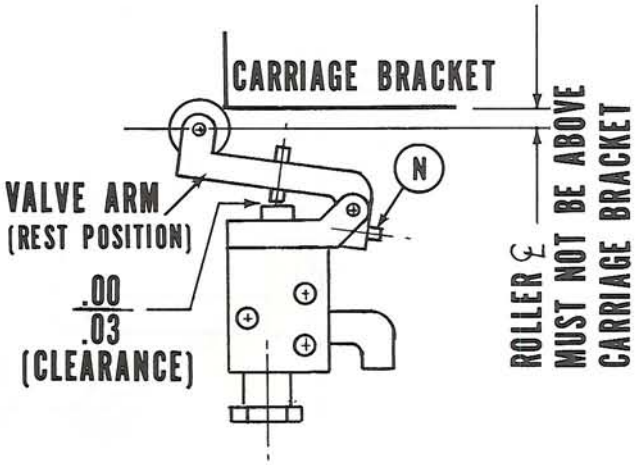

FIGURE 11A - CUSHION VALVE-SIDE VIEW

RESET & PUSHER CYLINDER VALVE & CARRIAGE RETURN VALVE: Refer to Figures 11B & 11C.

1. Adjust screw (N) to obtain $\frac{.12}{.18}$ dimension between actuator and valve flipper (in rest position).
2. Adjust screw (M) to obtain .035 ± .025 dimension between actuator and top of valve flipper. Valve arm must be bottoming valve plunger when adjustment is made.

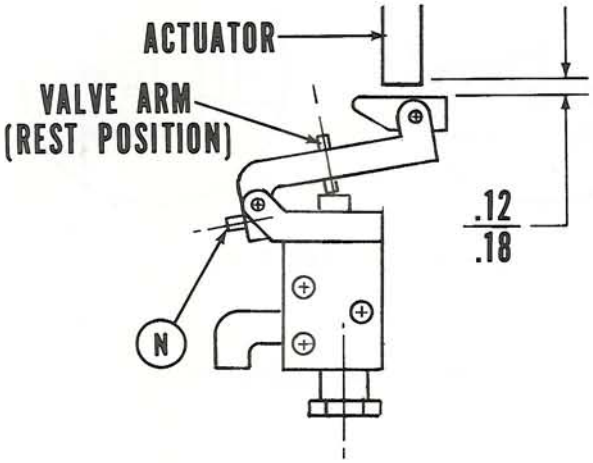

FIGURE 11B - RESET VALVE, PUSHER CYLINDER VALVE, CARRIAGE RETURN VALVE - SIDE VIEW

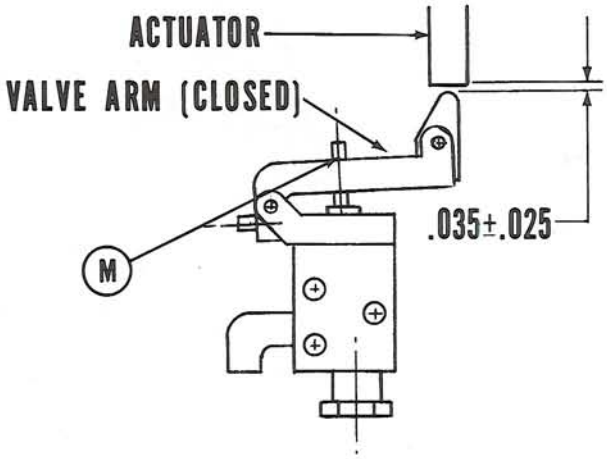

FIGURE 11C - RESET VALVE, PUSHER CYLINDER VALVE, CARRIAGE RETURN VALVE - SIDE VIEW

BRUSH REPLACEMENT:

Disconnect the main air supply to the S-609 before starting the replacement. For best performance, replace all six brushes at one time.

P/N 70-8000-2580-4 Brush Pack consists of:

Five - with 1-1/2 inch lg. bristle.
One - with 1-1/4 inch lg. bristle.

VERTICAL BRUSHES - Refer to Figure 12.

1. Manually outstroke the cut and buff heads, as shown, one at a time.
2. Remove and retain the two brush screws (K) and nuts. Discard the old brush.
3. Place the new brush (1-1/2 inch lg.) on the bracket, as shown.
4. Assemble and tighten the screws and nuts to secure the brush.

HORIZONTAL BRUSHES - Refer to Figure 12.

1. Remove and retain the two screws (K-K). Discard the old brush.
2. Install the new brush (lower - 1-1/2 inch lg.), (upper - 1-1/4 inch lg.).
3. Assemble and tighten the screws to secure the brush.

The same steps are followed in the upper and lower brush replacement. Connect the main air supply.

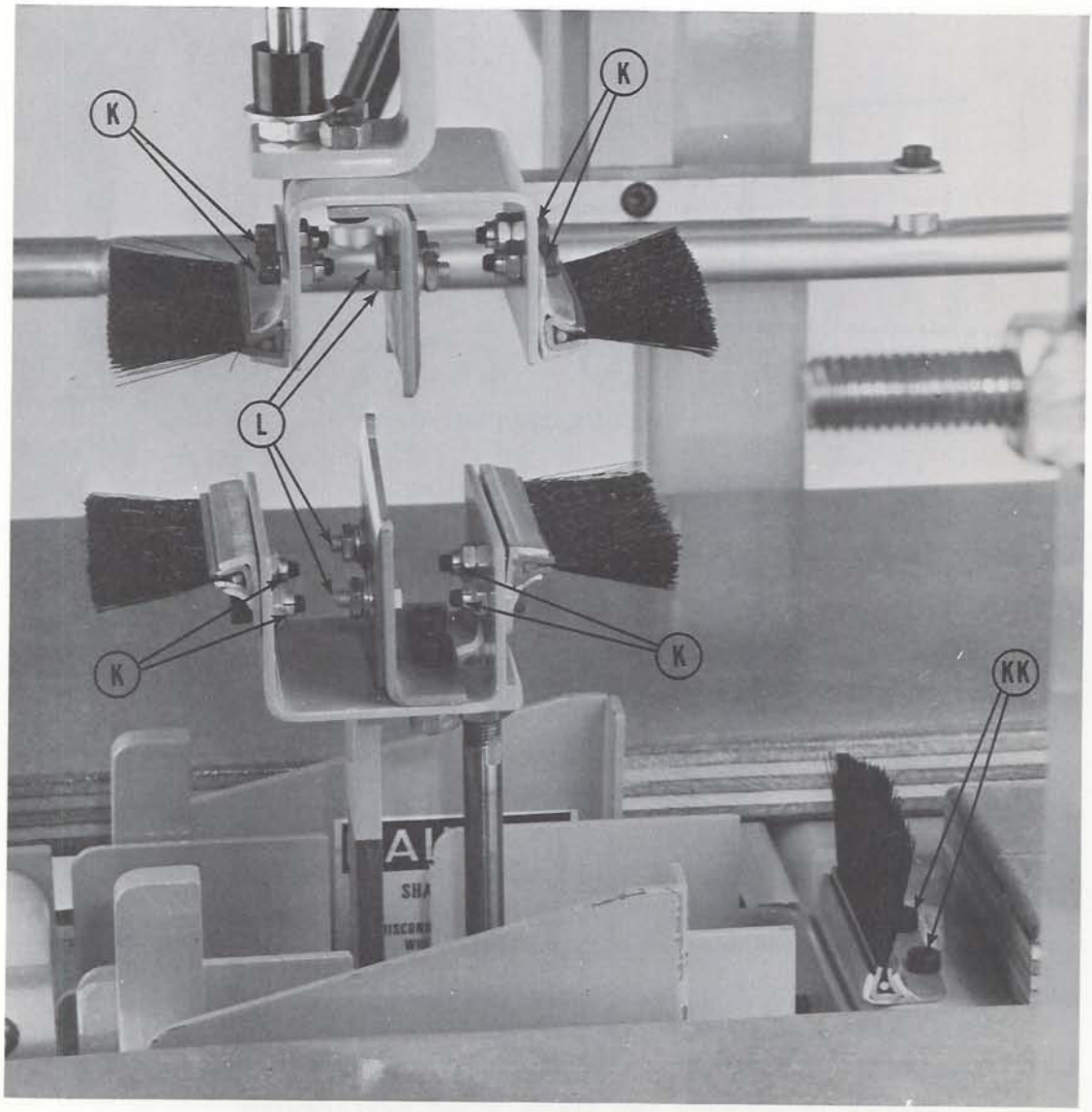

FIGURE 12 - CUT AND BUFF HEADS -RIGHT SIDE VIEW

CUT-OFF BLADE:
The cut-off blades used on all S-609 Box Sealers normally clean themselves. Should tape adhesive build-up occur, carefully wipe clean with oily cloth.

C A U T I O N - Blades are extremely sharp.

BLADE REPLACEMENT: (Refer to Figures 12 and 13.)
NOTE: The S-609, Model 674 is supplied with two extra cut-off blades (Item 45 Parts List).
Disconnect the main air supply to the S-609 before starting the replacement.

1. Manually outstroke the cut and buff heads, as shown in Figure 12, one at a time.
2. Remove and retain the blade screw (L), nut and washer from each blade. Remove the old blades.
3. Postion the new blades with the flat side against the blade holder as shown in Figure 13. Assemble the blade screws (L) with the washers next to the nut.

The same steps are followed in the upper and lower blade replacement. Connect the main air supply.

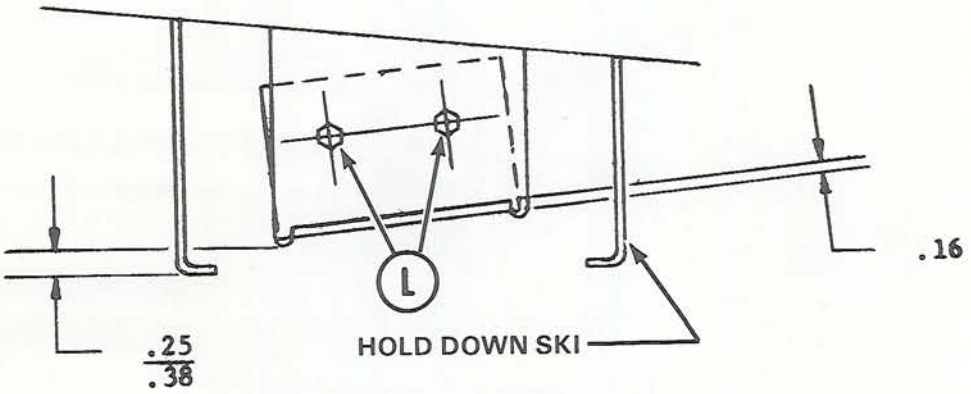

UPPER CUT-OFF BLADES

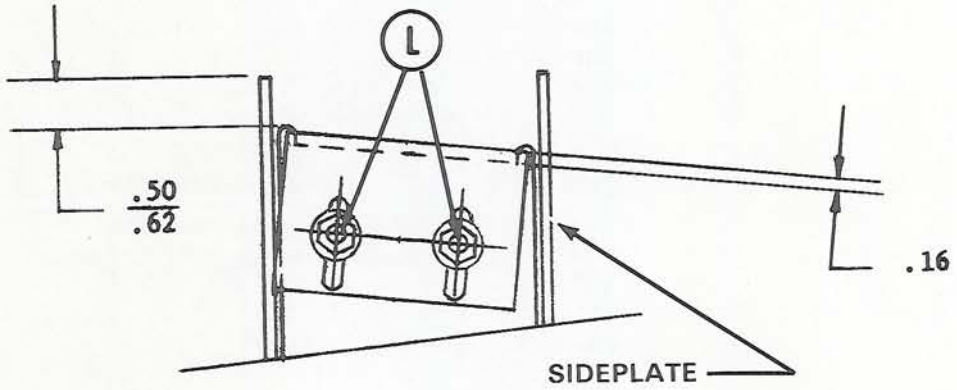

LOWER CUT-OFF BLADES

FIGURE 13 - UPPER AND LOWER BLADE REPLACEMENT
REAR END VIEW

MAINTENANCE

AIRLINE FILTER

Occasionally drain the water from the air filter. Use the quick disconnect (Figure 2) to remove and clean the bowl. DO NOT allow the water to go above the baffle.

LUBRICATION

Box Pusher Carriage - Cam followers (60, Figure 21) need no lubrication.

Carriage Bar (65, Figure 21) - requires no additional oil or grease.

NOTE: The carriage bar comes prelubricated from the factory to prevent rusting.

Taping Head Slides (17, 40, Figure 20)
Upper and Lower - Texaco Marfex All Purpose Grease or equivalent. Lubricate once every two months or 150,000 applications.

Box Stop - Lightly coat with Texaco Marfex All Purpose Grease or equivalent once every two months or 150,000 applications.

Air Line Lubricator - Use SAE #5 oil or lightweight spindle oil (rated 100SSU at 100° F). Maintain proper oil level in lubricator bowl. Set adjustment screw (Figure 2) for 1 drop per 12-18 machine cycles. Oil bowl has enough capacity for 2 months running when machine is run at full capacity.

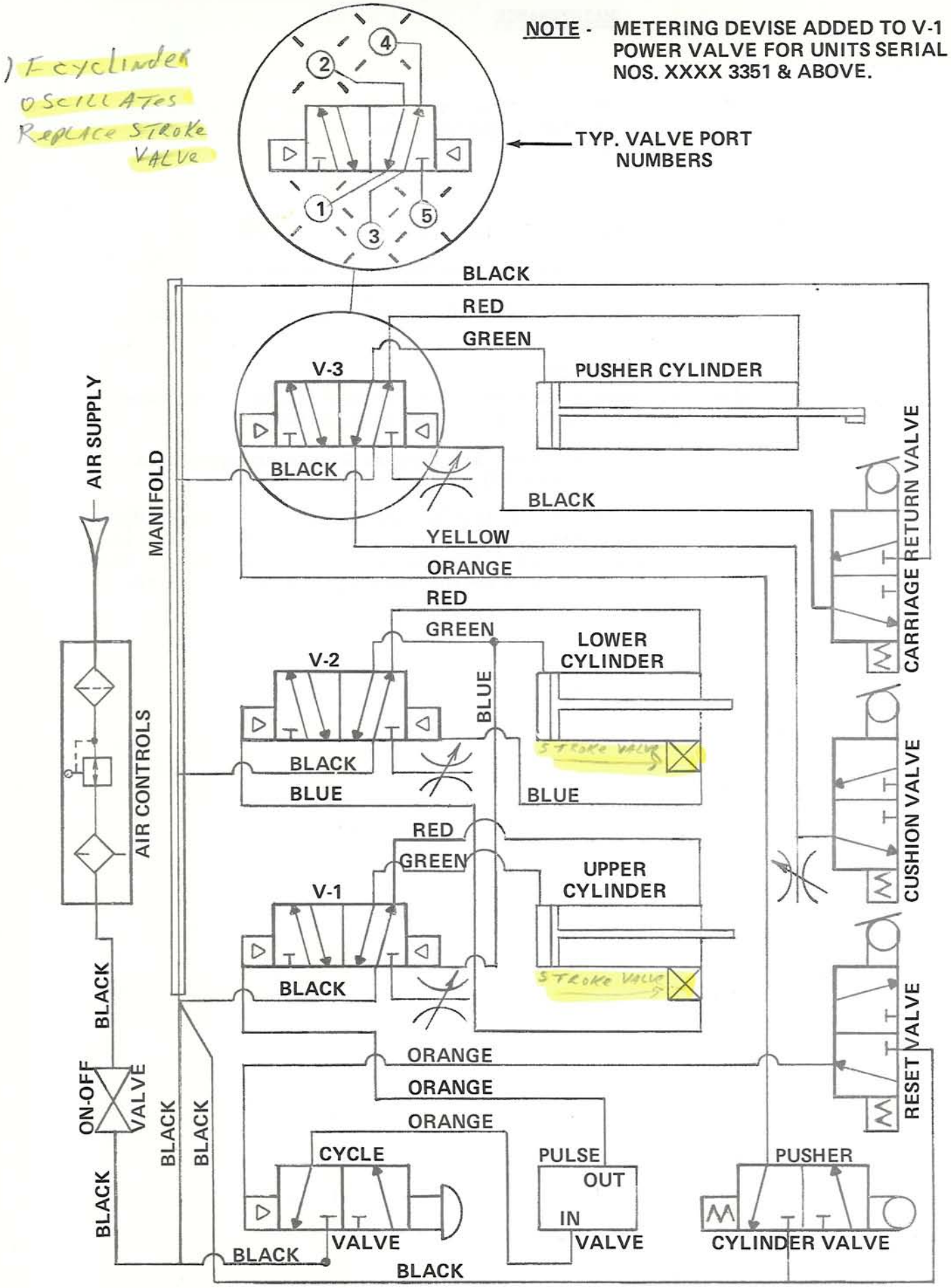

FIGURE 14 PNEUMATIC CIRCUIT DIAGRAM

PROBLEM	PROBABLE CAUSE	STEPS TO CORRECT
Tape not cutting or ragged cutting.	1. Dull cut-off blades.	1. Replace blades. Refer to Blade Replacement Section
	2. Blades at wrong angle.	2. Correctly adjust blades. Refer to Blade Replacement Section.
	3. Improper tape tension.	3. Adjust tape tension. Refer to Tape Web Tension Section.
	4. Low air pressure.	4. Adjust air pressure to 50 - 60 P.S.I.
Excess tape wrinkling on end of box.	1. Box flaps not positioned straight.	1. Correct position of box flaps. See sketch below.
	2. Box overfilled.	2. Repack boxes.
	3. Brushes worn.	3. Replace brushes. Refer to Brush Replacement Section.
Tape not sealing box.	1. Brushes worn.	1. Replace brushes. Refer to Brush Replacement Section.
	2. Box surface treated or dusty.	2. Provide clean box surface.
	3. Box overfilled.	3. Repack box.
	4. Box Flaps not positioned straight.	4. Correct position of box flaps, see above sketch.

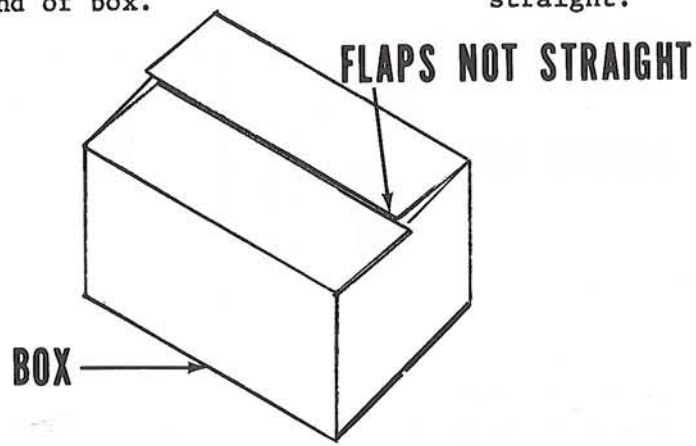

INCORRECT BOX FLAPS

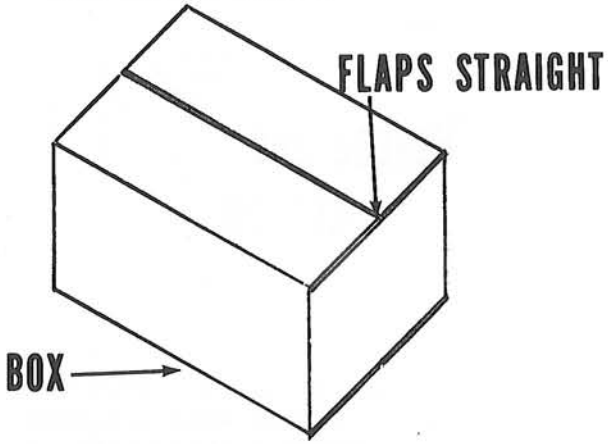

CORRECT BOX FLAPS

PROBLEM	PROBABLE CAUSE	STEPS TO CORRECT
Box moves slowly through machine.	1. Low air pressure. 2. Side guides and/or top head adjusted too tight. 3. Box overfilled. 4. Air valves out of adjustment. 5. Tape tension too high.	1. Adjust air pressure to 50 - 60 P.S.I. 2. Readjust side guides and/or top head. Refer to Set-Up Section. 3. Repack box. 4. Readjust air valves. Refer to Adjustment Section. 5. Adjust tape tension. Refer to Set-up Section.
Box overtravels pusher stop. (See sketch below)	1. Pusher cylinder cushion not adjusted correctly. 2. Side guides and/or top head adjusted too loose.	1. Readjust cushion valve. Refer to Adjustment Section. 2. Readjust side guides and/or top head. Refer to Set-up Section.

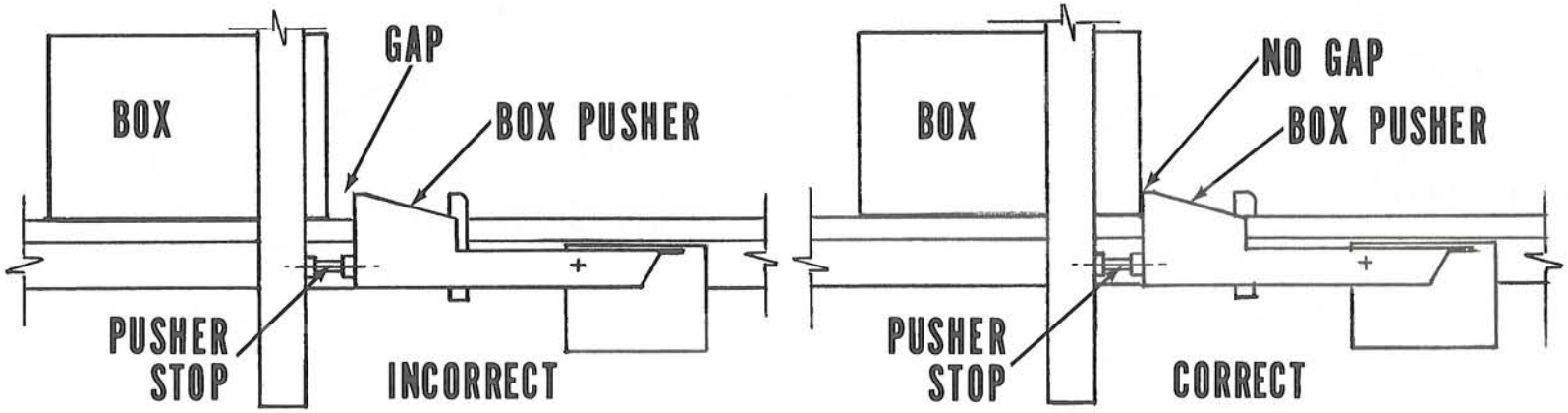

Back of box crushed by pushers.	1. Top head and/or side guides adjusted too tight. 2. Box overfilled.	1. Readjust top head and/or side guides. Refer to Set-Up Section. 2. Repack box or readjust top head and/or side guides. Refer to Set-Up Section.

PROBLEM	PROBABLE CAUSE	STEPS TO CORRECT
Unequal tape leg lengths.	1. Box not being pushed in far enough.	1. Position box correctly. See sketch below.

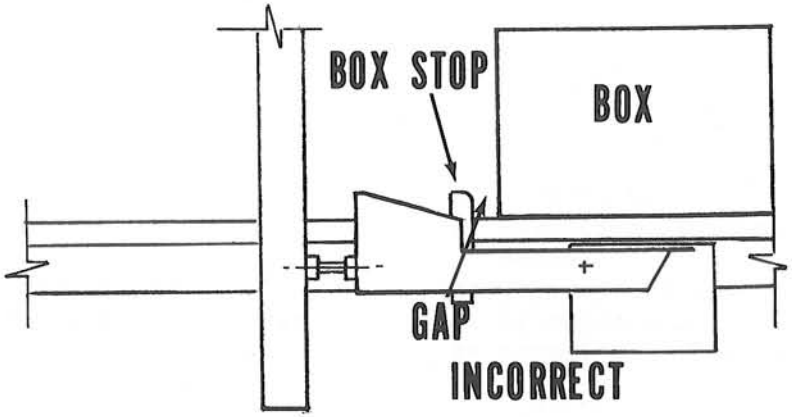

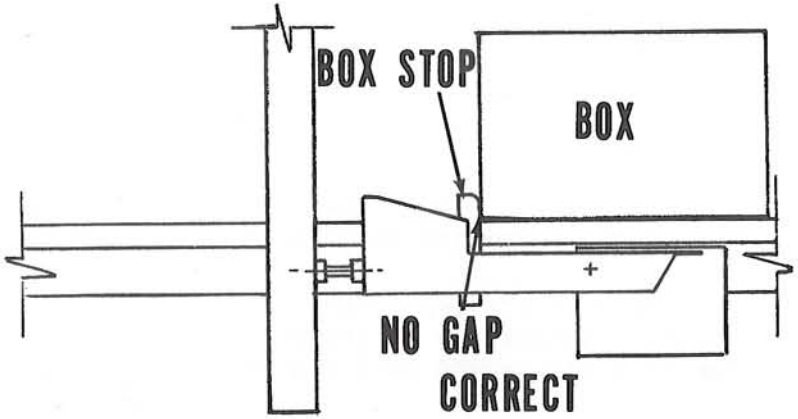

	2. Pushers not centered on lower cut & buff blades.	2. Adjust pusher stops to center pushers on lower cut & buff blades.
Box undertravels pusher stop. See sketch below.	1. Pusher cylinder cushion not adjusted correctly. 2. Pusher stops not adjusted properly.	1. Readjust cushion valve. Refer to Adjustment Section. 2. Adjust pusher stops to center pushers on lower cut & buff blades.

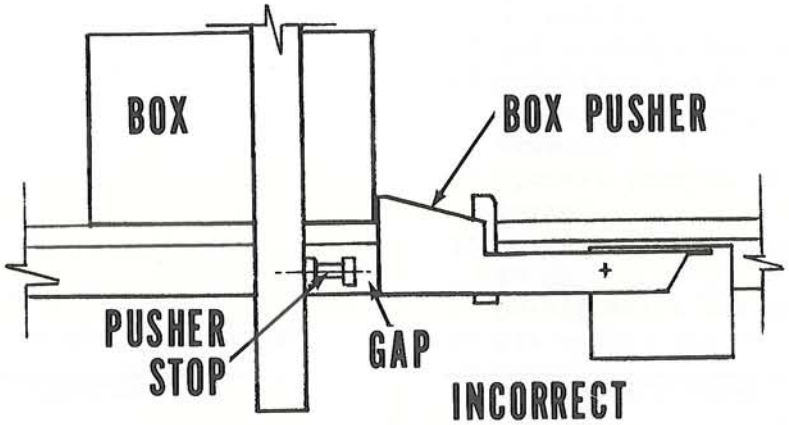

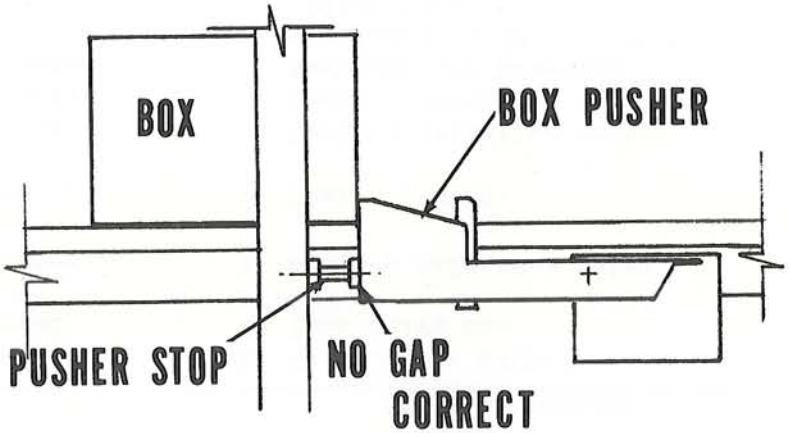

PROBLEM	PROBABLE CAUSE	STEPS TO CORRECT
Machine does not cycle.	1. Air supply not connected.	1. Connect air supply.
	2. On/Off valve not turned to ON.	2. Turn valve on.
	3. Defective cycle actuator valve.	3. Replace defective valve.
	4. Blocked impulse valve exhaust.	4. Clear exhaust.
	5. Defective impulse valve.	5. Replace defective valve.
	6. Defective V-1 power valve.	6. Replace defective valve.
	7. Air pressure not adjusted correctly.	7. Readjust air pressure regulator to 50 - 60 P.S.I.
	8. Plugged or kinked air line.	8. Clear line
Top cylinder extends, does not retract. Machine continues to cycle.	1. Blocked impulse valve exhaust.	1. Clear exhaust.
	2. Defective impulse valve.	2. Replace defective valve.
	3. Defective V-1 power valve.	3. Replace defective valve.
	4. Plugged air line.	4. Clear line.
Cut & buff cylinders cycle. Pusher cylinder does not cycle.	1. Pusher cycle valve out of adjustment	1. Readjust pusher cycle valve. Refer to Adjustment Section.
	2. Defective pusher cycle valve.	2. Replace defective valve.
	3. Defective V-3 power valve.	3. Replace defective valve.
	4. Plugged air line.	4. Clear line.

PROBLEM	PROBABLE CAUSE	STEPS TO CORRECT
Any cylinder extends, does not retract. Machine does not continue cycle.	1. Defective stroke signal valve.	1. Replace defective valve.
	2. Defective power valve.	2. Replace defective valve.
	3. Air pressure too low.	3. Readjust air pressure to 50 - 60 P.S.I.
	4. Plugged air line.	4. Clear line.
Cycle actuator valve does not reset.	1. Reset valve out of adjustment.	1. Pull cycle actuator knob up. Readjust reset valve. Refer to Adjustment Section.
	2. Defective cycle actuator valve.	2. Replace defective valve.
	3. Defective reset valve.	3. Replace defective valve.
	4. Low air pressure.	4. Readjust air pressure to 50 - 60 P.S.I.
	5. Plugged air line.	5. Clear line.

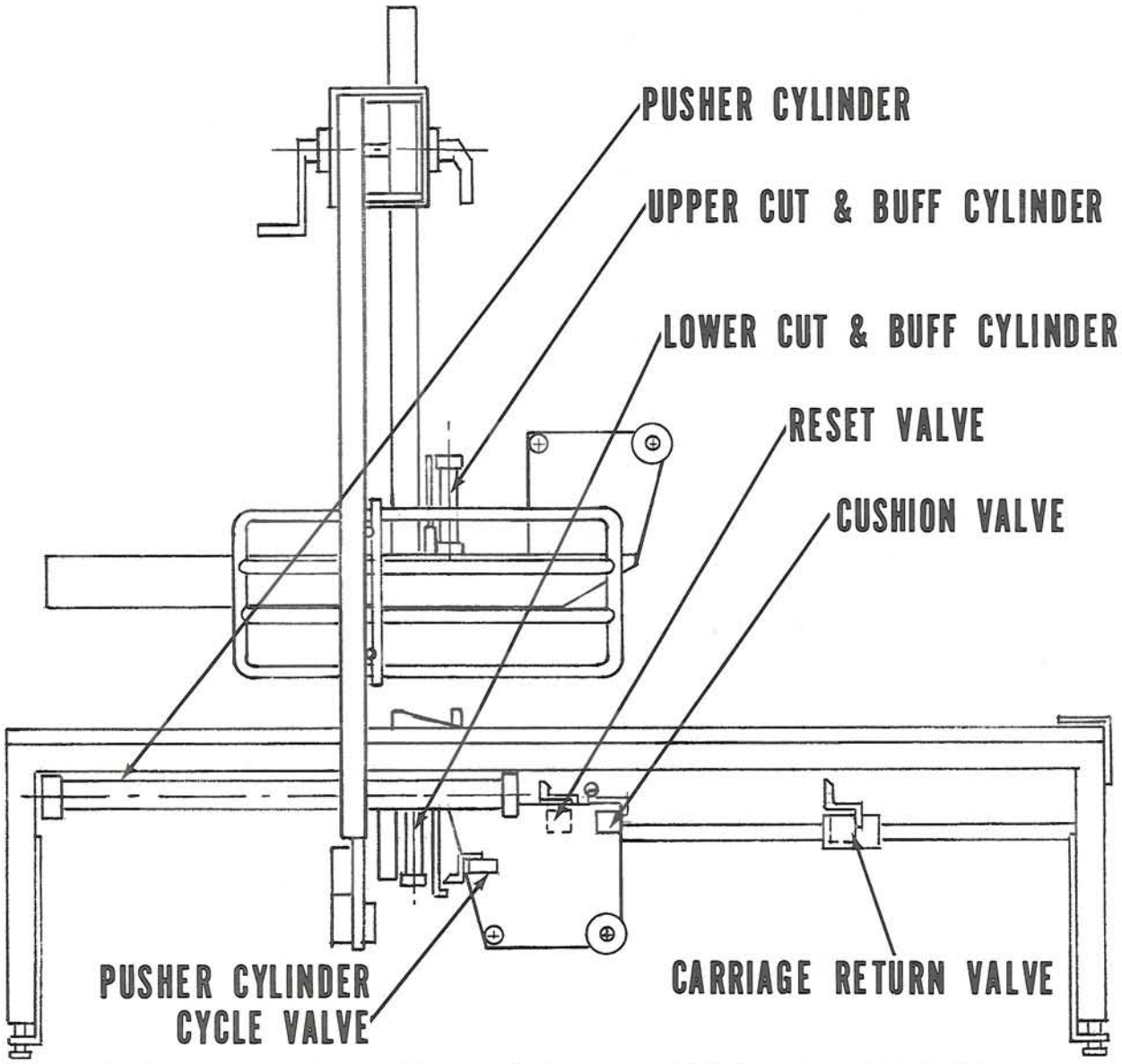

FIGURE 15 - LIMIT VALVE AND CYLINDER LOCATION - LEFT SIDE VIEW

VALVE OUT OF ADJUSTMENT	PROBLEM OCCURRING - Refer to Figure 15
Cushion valve	Box over or under coasting.
Reset valve	Cycle actuator knob does not reset-machine cannot be cycled.
Pusher cylinder cycle valve	Machine does not complete cycle - pusher cylinder does not extend.
Carriage Return Valve OR STOKE SIGNAL VALVE	Machine does not complete cycle - pusher cylinder extends but does not return.

STEPS TO CORRECT

To correct any of above problems, refer to Adjustment Section and check valve adjustment where problem occurred. If problem is not corrected, valve may be defective. Replace defective part.

SUGGESTED SPARE PARTS LIST

It is suggested that the following minimum list of spare parts be maintained:
NOTE: Refer to the replacement parts list for full part description.

QTY.	REF. NO.	PART NUMBER	DESCRIPTION
4	45	78-8015-6605-6	Blade, Crush Ground (2 1/2 Inch)
1	88	70-8000-4532-3	Valve, Stroke Signal (for use on item 33)
1	46	70-8000-2580-4	Brush Pack
1	-	70-8000-4977-0	Tiny Tim Seal Kit #CK-124
1	-	78-8005-9927-2	Air Serve Seal Kit #CK-20-J-5/8
1	84	70-8000-4450-8	Valve, Pulse, Mead #414

HOW TO ORDER REPLACEMENT PARTS

1. Refer to Figures 16 thru 27 to determine individual part and reference number. Refer to replacement parts list for part number and part name.

   NOTE: The complete description has been included for the standard fasteners and commercially available components. This has been done to allow the customer to obtain these standard parts locally, should they elect to do so.

2. Order parts by part number, part name, catalog number, model number and part quantity required. (Order form attached to back section of manual.)

   $2.00 handling charge for all parts orders under $5.00
   Replacement part prices available on request.

3. Replacement parts and part prices available direct from:

   3M Company, Service Parts & Reconditioning Service (TDP)
   P. O. Box 33900, St. Paul, Minnesota 55133

4. Repair service available direct from 3M Branch offices.

   Refer to the front of the instruction manual for branch service information.

CONSUMER BLADE DISCOUNT

Consumer orders for 100 - 199 blades (one blade per quantity) will receive a 10% discount. Consumer orders for 200 or more blades (one blade per quantity) will receive a 25% discount.

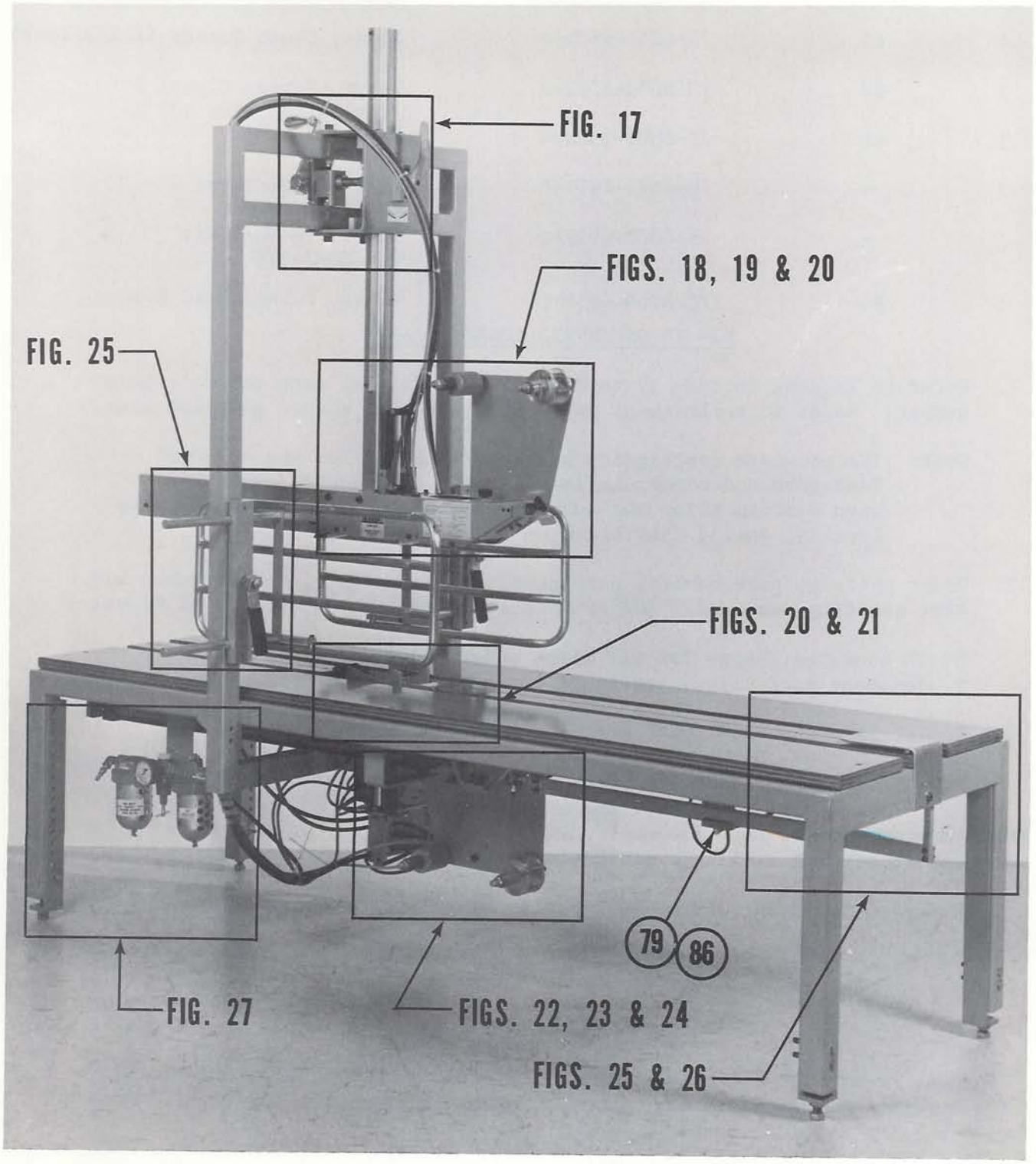

FIGURE 16 REPLACEMENT PART LOCATION

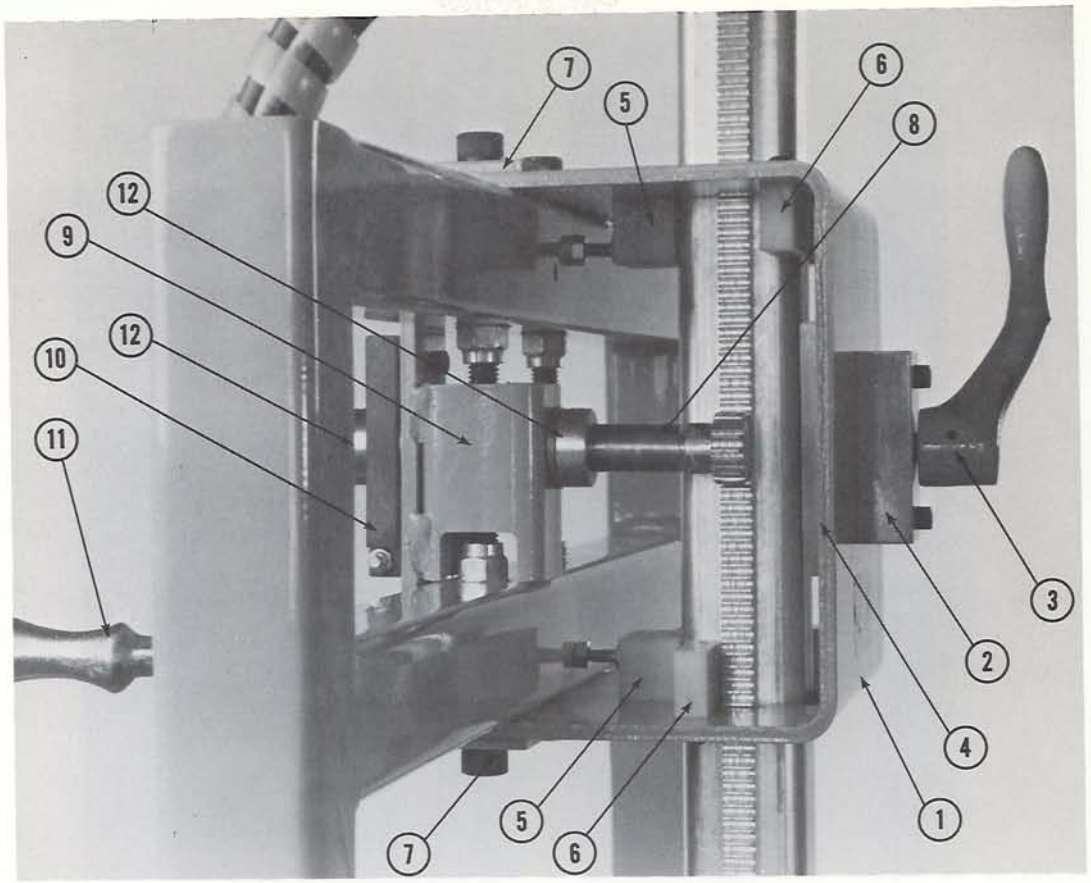

FIGURE 17 HOLDDOWN CLAMP

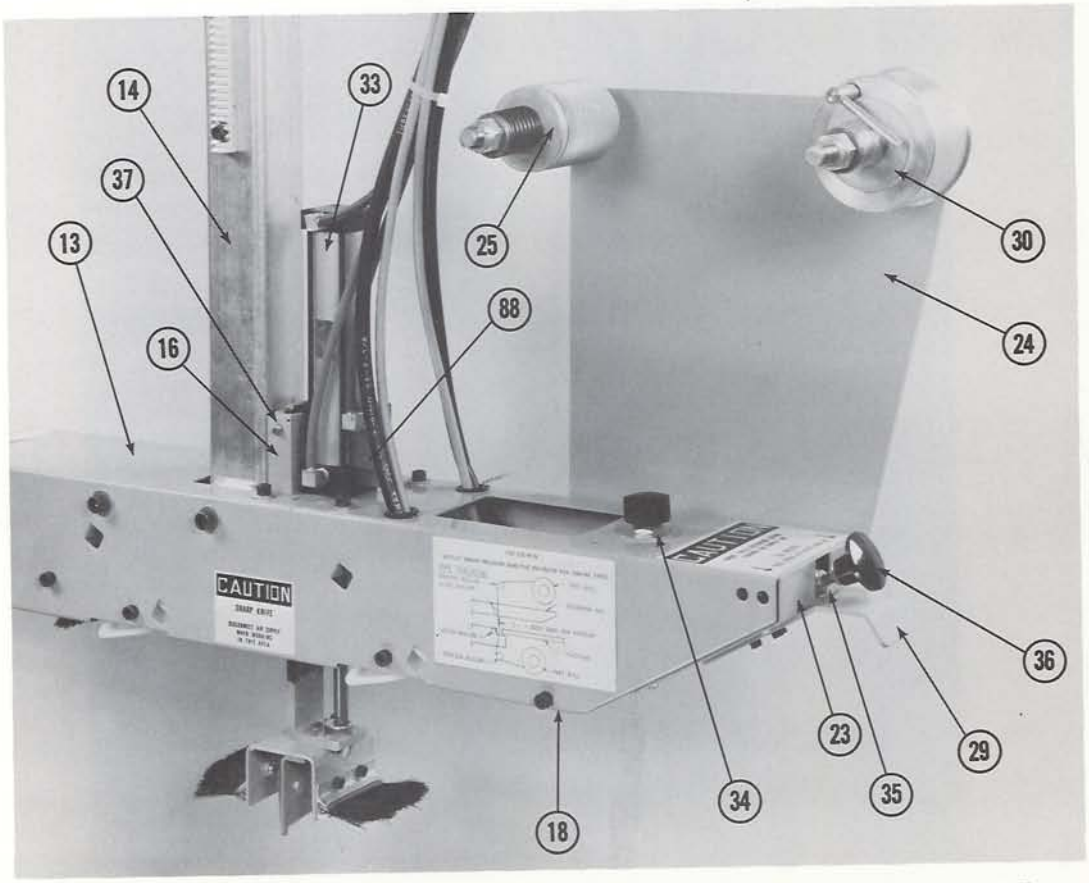

FIGURE 18 UPPER TAPE ROLL BRACKET & HOLDDOWN SKI

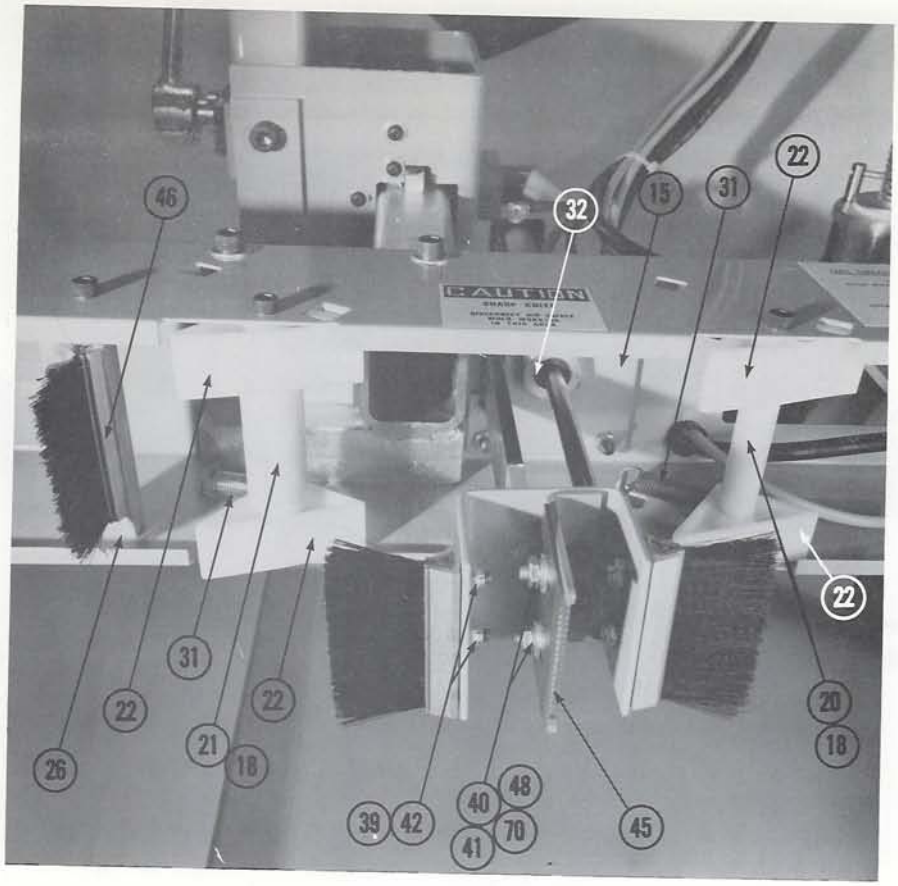

FIGURE 19 HOLDDOWN SKI

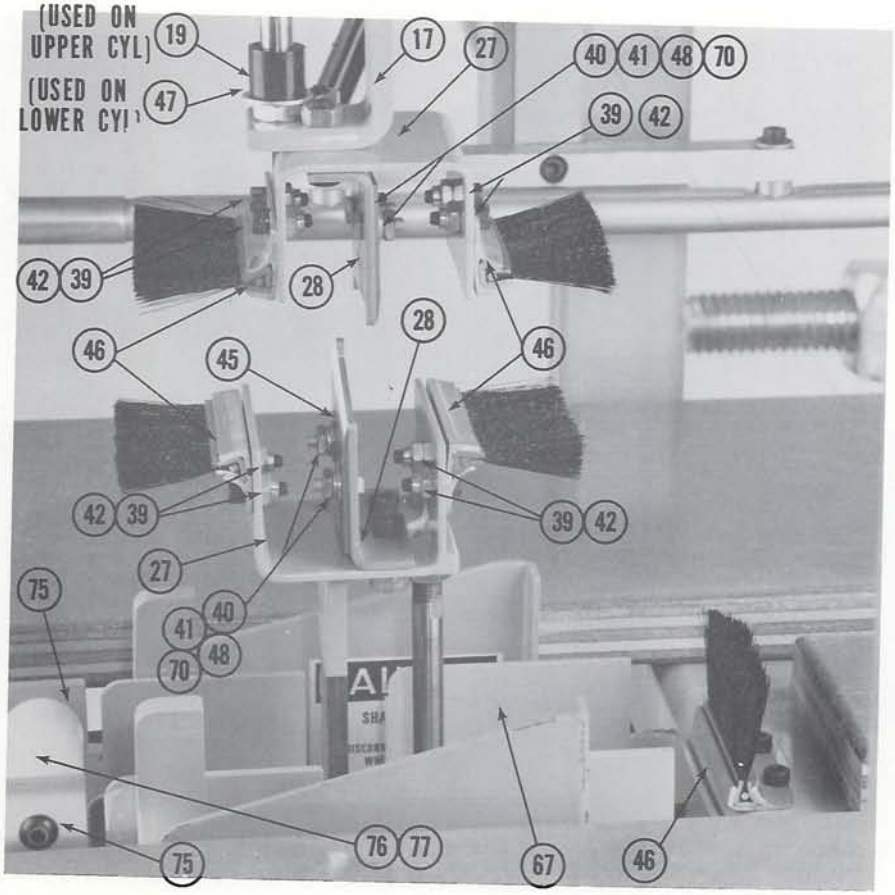

FIGURE 20 CUT & BUFF ASSEMBLY

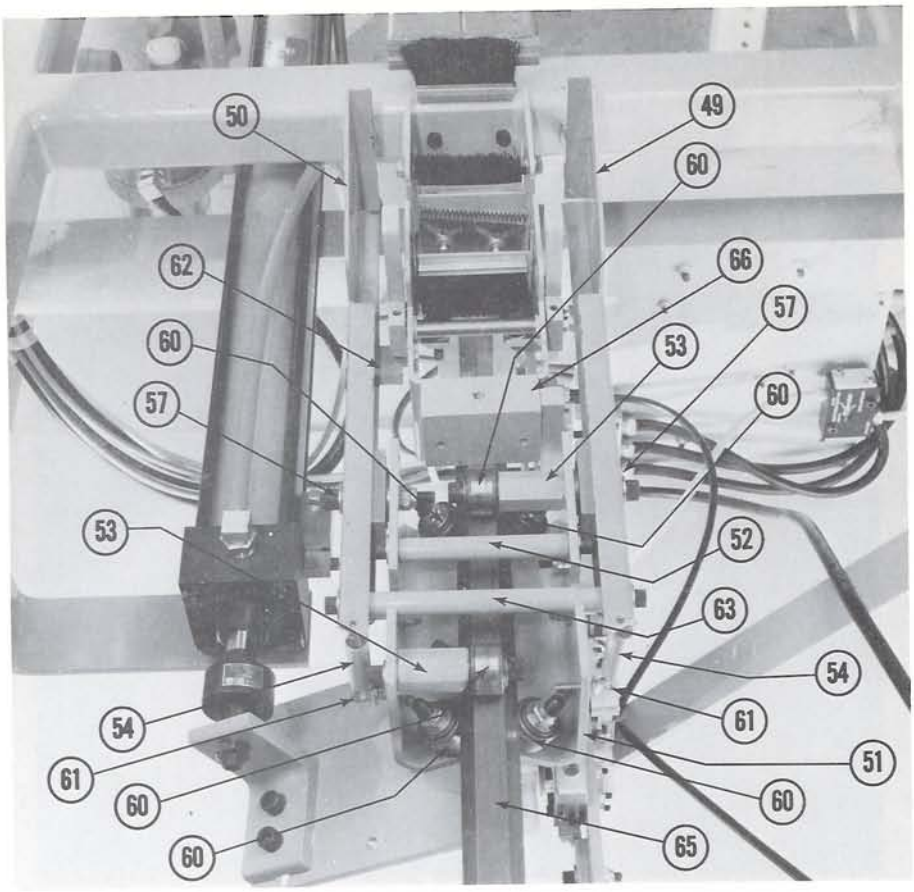

FIGURE 21 UNDER CARRIAGE ASSEMBLY

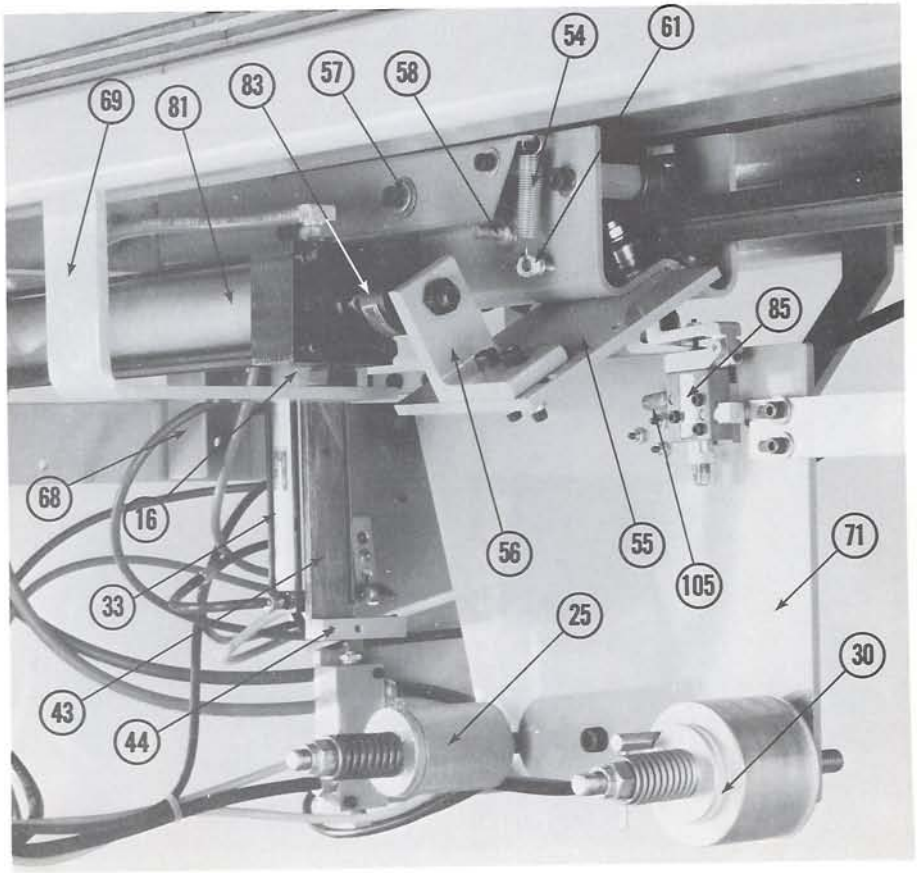

FIGURE 22 LOWER TAPE ROLL BRACKET

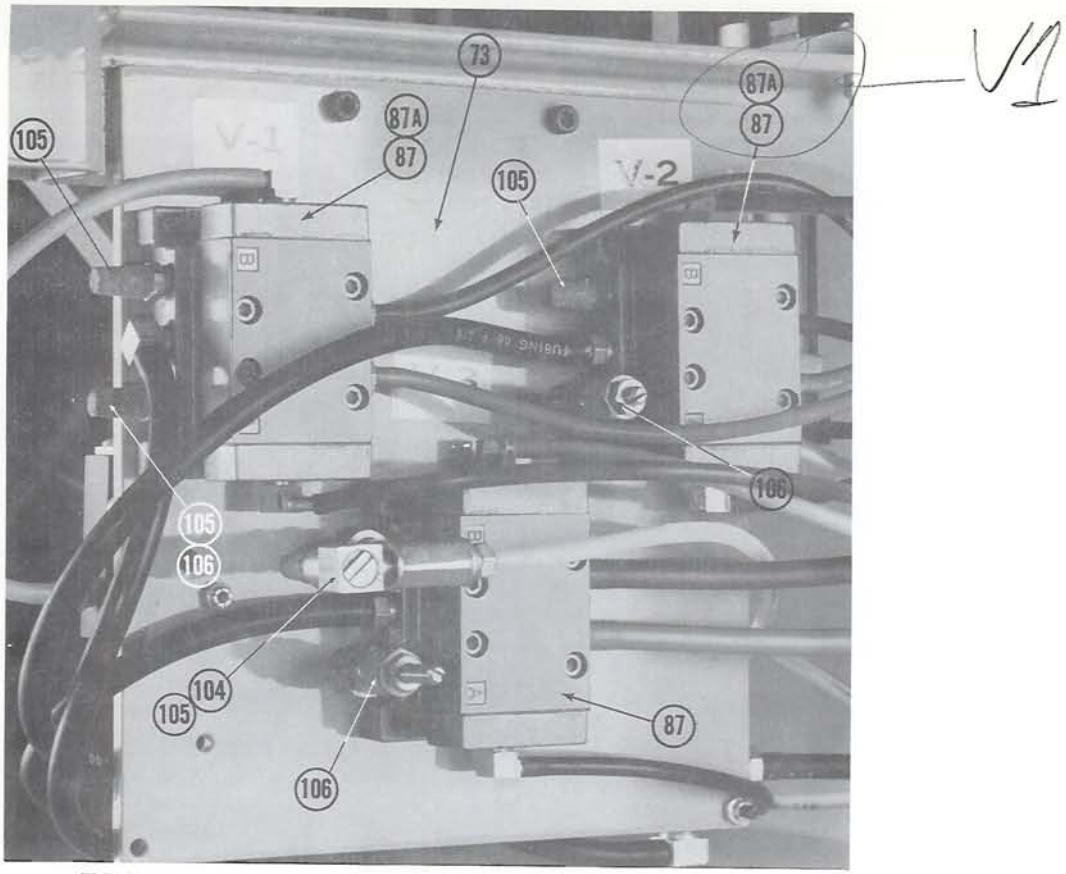

FIGURE 23 AIR CONTROL PANEL

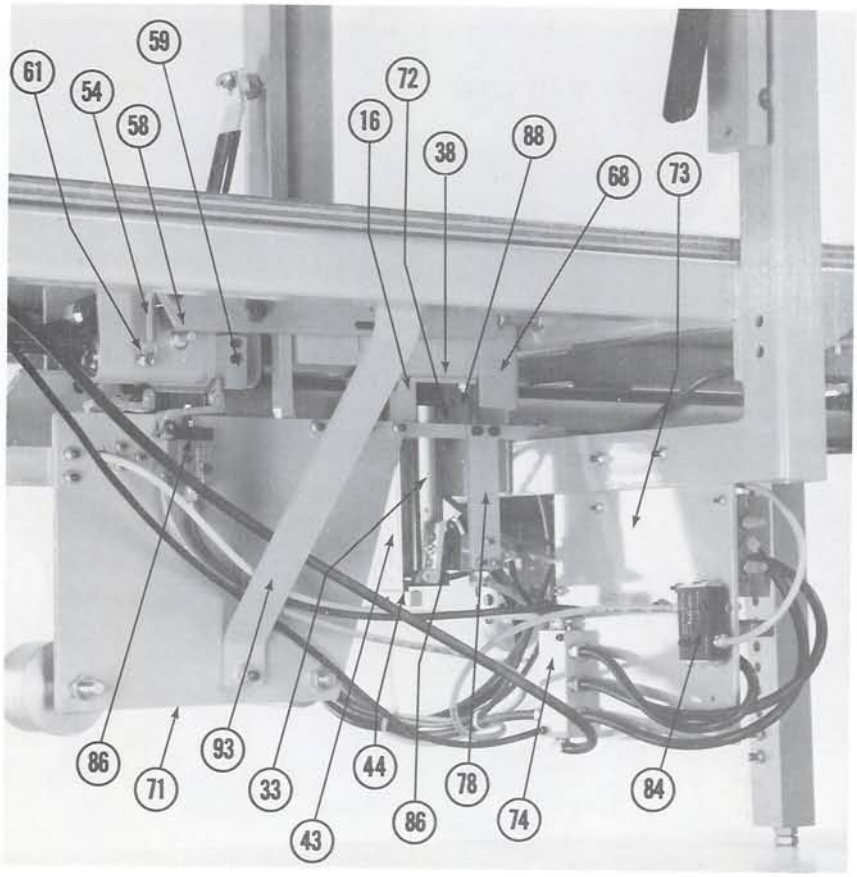

FIGURE 24 CONTROL PANEL & LIMIT VALVES

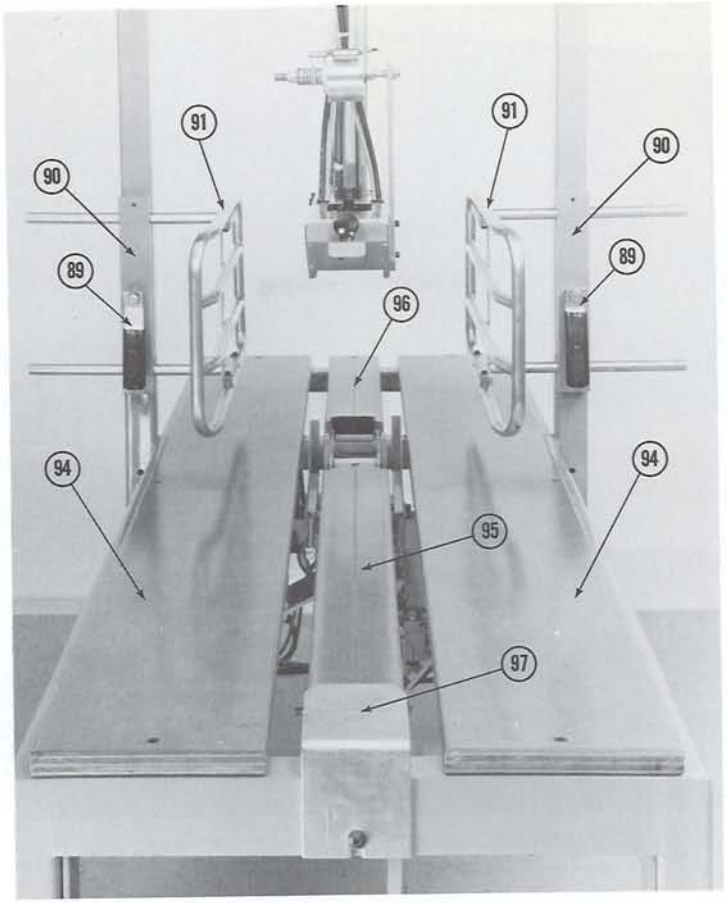

FIGURE 25 SIDE GUIDES & OPERATING PLATFORM

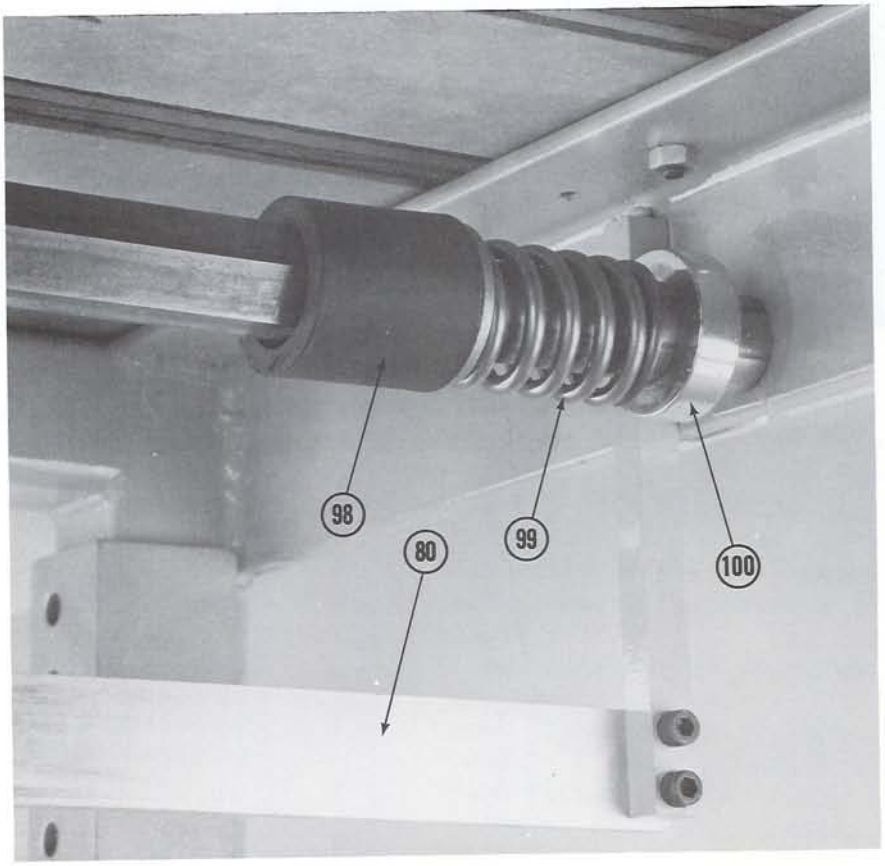

FIGURE 26 UNDERCARRIAGE CUSHION

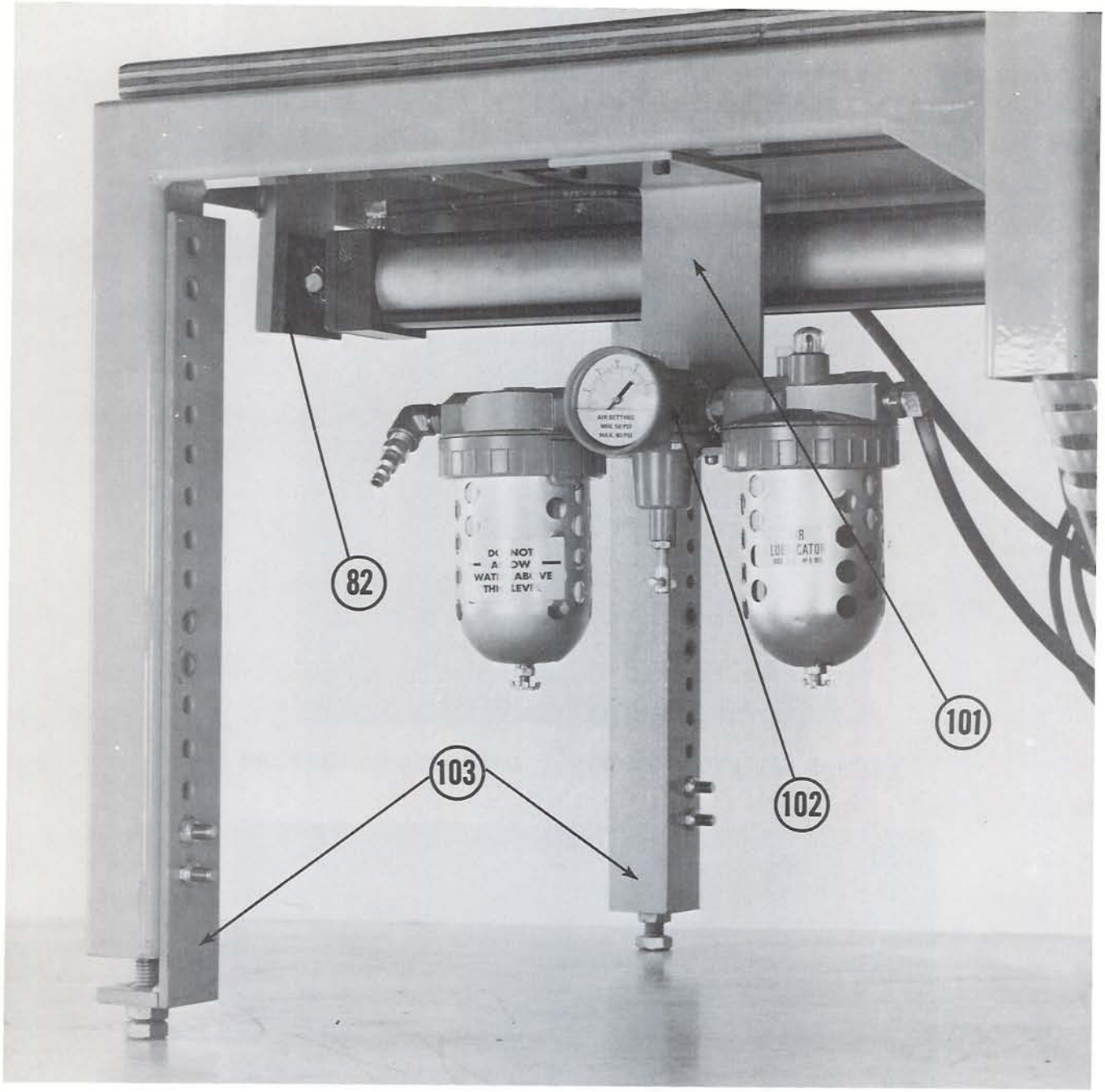

FIGURE 27 AIR LUBRICATOR-REGULATOR-FILTER & LEG EXTENSIONS

REPLACEMENT PARTS LIST

CAT. NO. S-609 BOX SEALER MODEL 674

NOTE - Replacement parts are common to units with serial nos. XXXX3001 and above except as noted.

REF.NO.	PART NUMBER	DESCRIPTION
1	70-8000-5595-9	Bracket, Mast
2	70-8000-5565-2	Block, Handle
3	70-8000-3246-1	Handle, Clamping Assy.
4	70-8000-5568-6	Plate, Mast Clamp
5	70-8000-5570-2	Slide, Large Mast
6	70-8000-5569-4	Slide, Small Mast
7	70-8000-3244-6	Plate, Frame Clamping
8	70-8000-5577-7	Gear Assy.
9	70-8000-5573-6	Holder Assy., Bearing
10	70-8000-5574-4	Brake
11	70-8000-5576-9	Crank, Lift
12	70-8000-3416-0	Collar - 3/4 I.D. x 1 1/4 O.D. x 9/16 Wide, Stl., Cad. Pl. w/Set Screw
13	70-8000-5640-3	Ski, Main
14	70-8000-5631-2	Mast, Rack Assy.
15	70-8000-3979-7	Plate, Reinforcing
16	70-8000-3978-9	Guide
17	70-8000-3977-1	Slide
18	70-8000-3968-0	Shaft
19	70-8000-4290-5	Cushion
20	70-8000-4746-9	Roller, Front
21	70-8000-4747-7	Roller, Rear
22	70-8000-5642-9	Ski
23	70-8000-4452-4	Mount, Hand Valve
24	78-8011-6635-2	Bracket Tape Roll Mounting
25	70-8000-2582-0	Tension Assy., Tape
26	70-8000-3967-2	Block, Brush Mounting
27	70-8000-3963-1	Mount, Brush
28	70-8000-3964-9	Mount, Blade
29	70-8000-4501-8	Guard, Switch
30	70-8000-3142-2	Cam Actuated, Adjustable Tension, Friction Tape Drum Assy.
31	70-8000-4008-4	Spring
32	70-8000-4057-1	Nut, Altered (Use with item 33)
33	70-8000-4006-8	Cylinder, Air, Tiny Tim Model VTSR, 1-1/8 Inch Bore x 5 Inch Stroke, Single Rod End. 3/8 Dia. Rod, w/Block V-Seals, Stroke Signal Valve at Rod End, 90° CCW From Ports When Viewed From Cap End.
34	70-8000-4970-5	Valve, Shut-Off, Generant 4000 Series #QE,44
35	70-8000-4485-4	Valve, Schrader #41495-1000, 3-Way, Push Pull Pilot Return
36	70-8000-4486-2	Knob, Dimco-Gray #237, 1/4-28 Thd.
37	70-8000-4967-1	Plunger, Stubby Spring, 1/4-20 NC Thrd., Nylon Plunger, .316 to 10 1/2 lb. Pressure, Vlier Engineering Corp. #NM54-N

REPLACEMENT PARTS LIST
CAT. NO. S-609 BOX SEALER MODEL 674
(CONTINUED)

REF. NO.	PART NUMBER	DESCRIPTION
38	70-8000-4177-7	Plate, Lower Reinforcing
39	70-7023-3850-3	Screw, Cap Soc. Hd. 10-32 x 1/2, Stl.Blk.Ox.
40	70-8000-4527-3	Screw, Mach. Hex. Hd. Trimmed, 10-32 x 1/2, Stl. Cad. Pl.
41	18-1728-2203-5	Nut, Mach. Screw Hex. 10-32, Stl. Cad. Pl.
42	70-7023-7470-6	Nut, SPS #21FC-1032, Flexloc, Light Hex Full Ht. 10-32, Stl. Cad. Pl.
43	70-8000-4525-7	Slide, Lower
44	70-8000-4524-0	Actuator, Slide
45	78-8015-6605-6	Blade - Crush Ground (2 1/2 Inch)
46	70-8000-2580-4	Brush Pack
47	70-8000-4498-7	Cushion
48	70-7023-4390-9	Washer, Plain, SAE #10, Stl., Cad. Pl.
49	70-8000-5492-9	Pusher Assy., Right
50	70-8000-5489-5	Pusher Assy., Left
51	70-8000-5496-0	Bracket, Carriage
52	70-8000-3607-4	Spacer, Round
53	70-8000-3442-6	Spacer, Cam
54	70-8000-3692-6	Spring
55	70-8000-5703-9	Plate, Air Cylinder Adjusting
56	70-8000-3608-2	Bracket, Air Cylinder
57	70-8000-4205-6	Shaft, Bearing
58	70-7003-0140-4	Stop, Eccentric
59	70-8000-5797-1	Block, Valve Actuating
60	70-8000-1206-7	Cam Follower, Smith #CTY-31X
61	70-8000-2977-2	Screw, Eye, 1/4-20 x 3/4, Ohio #ES-2112, Nickel Pl., Ohio Nut & Bolt Co.
62	70-8000-5488-7	Cam, Box Stop
63	70-8000-5487-9	Spacer, Pusher
64	70-8000-5704-7	Carriage Assy. (Items 49 thru 63)
65	70-8000-5628-8	Bar, Carriage
66	70-8000-5614-8	Block, Carriage Bar Mounting
67	70-8000-5498-6	Mount, Air Cylinder Assy.
68	70-8000-4160-3	Brace for Air Cylinder Mount
69	70-8000-4241-1	Support, Air Cylinder Assy.
70	70-7023-8540-5	Washer, Lock Spring, ASA Med. #10 Stl.Cac.Pl.
71	78-8011-6638-6	Bracket, Tape Roll Mounting, Lower
72	70-8000-4162-9	Brace
73	70-8000-4163-7	Plate, Valve Mounting
74	70-8000-4154-6	Manifold, Air
75	70-8000-4153-8	Roller, Slide Bar
76	70-8000-2694-3	Shaft
77	70-8000-2647-1	Roller, Tape Guide
78	70-8000-4526-5	Mount, Pusher Cylinder Valve
79	70-8000-5730-2	Guide, Valve
80	70-8000-5729-4	Slide, Valve
81	78-8032-0221-3	Cylinder, Air, 2 Inch Bore, 32 Inch Stroke, Single Rod End, Detachable Clevis Mounting, Buna-N Seals, No Cushion, Airserve Model J2, J. E. Braas Co.

REPLACEMENT PARTS LIST
CAT. NO. S-609 BOX SEALER MODEL 674
(CONTINUED)

REF.NO.	PART NUMBER	DESCRIPTION
82	78-8005-9924-9	Bracket, Eye - Airserve #40281
83	70-8000-1203-4	Aligner, Cylinder Rod, Airserve Model RA 44
84	70-8000-4450-8	Valve, Pulse, Mead #414
85	78-8032-0010-0	Valve, Schrader #40421-1000, 3-Way, Roller Actuated, W/Jam Nut on Adjusting Screws
86	70-8000-4451-6	Valve, Schrader #40431-1000, One Way Tripper Operated W/Jam Nut on Adjusting Screws
87	70-8000-4254-4 (Serial Nos. XXXX3001 thru XXXX3350)	Valve, 1/8 Inch, 4-Way, 5 Ports, Double Air Pilot Actuated, Detented Numatics Inc. #IDPA4 J. E. Braas Co.
87A	78-8032-2337-5 (Serial Nos. XXXX3351 and above)	Valve Numatics #11DPA4410 4-Way Double Detented
88	70-8000-4532-3	Valve, STroke Signal, Mosier Ind. #90A SMALL CYLinder
89	70-8000-4457-3	Wrench Assy.
90	70-8000-4252-8	Clamp, Side Guides, Assy.
91	70-8000-3433-5	Tubular Side Guide Assy.
92	70-8000-5300-4	Stud (Used with Item 75)
93	70-8000-5564-5	Bar, Support
94	70-8000-5615-5	Bed, Side
95	70-8000-5617-1	Bed, Center Front
96	70-8000-5616-3	Bed, Center Rear
* 97	70-8000-4591-9	Box Holder Ass'y.
98	70-8000-5643-7	Rod, Cushion
99	70-8000-5638-7	Spring, Compression
100	70-8000-1439-4	Collar, R.D. Maxwell #16L, Clamptite, 1 Inch I.D. x 1 3/4 O.D. x 1/2 Wide, Stl., Chrome Pl.
101	70-8000-5613-0	Mount, Air Control
102	70-8000-2461-7	Air Control Assy., Combination Filter, Oiler, Regulator, Wilkerson #61390E-3 J. E. Braas Co.
* 103	70-8000-3012-7	Leg, Extension For S-609 (Set of 4)
104	70-8000-3263-6	Control, Flow, Tiny Tim #FCL-1
105	78-8002-2322-0	Muffler, Exhaust, Tiny Tim #EM-1
106	70-8000-4196-7	Muffler, Speed Control, Tiny Tim #SCN-1
-	78-8005-8869-7	Lubricant - Oil, Sta-Vis Spindle, lightweight, Rated 100 SSU at 100° F, 1 Qt.
-	70-8000-4977-0	Tiny Tim Seal Kit #CK-124 for 1 1/8 Inch Bore Cylinder, 3/8 Dia. Rod, Mosier Ind.
-	78-8005-9927-2	Airserve Seal Kit #CK-20-J-5/8 For 2 Inch Bore, Model J-2 Cylinder

* Contact your 3M representative for order information.

ATTACHMENTS

NOTE: The attachments listed below, when ordered with the standard S-609, are not assembled to the unit for shipping purposes.

70-8000-4972-1	Adjustment Side Guide Clamp Kit for S-609, Models 470, 572 & 674.
78-8011-6860-6	Stainless Steel Bed Model 174 for S-609, Model 674.
78-8011-7023-0	Caster Attachment - Model 174 for S-609, Model 674.

"SCOTCH" BRAND P/N 70-8000-4972-1 ADJUSTABLE SIDE GUIDE CLAMP KIT

FOR USE WITH
"Scotch" Brand Cat. No. S-609 Box Sealer
Model 470 (serial nos. 556 and above)
Model 572 (serial nos. 1000 and above)
Model 674 (serial nos. 3001 and above)

DESCRIPTION - The P/N 70-8000-4972-1 adjustable side guide Clamp Kit permits 3 position vertical adjustment of the side guides. This allows additional support of various size boxes and is not intended as a box flap closure.

Kit Consists of: (2) Side guide clamp assy. Packaged weight: 14 lbs.

INSTALLATION INSTRUCTIONS

Refer to Figure 1 and install the adjustable side guide clamps, one at a time, as follows:

1. Loosen the side guide clamp handle (A). Remove and retain the side guide (B).
2. Remove and retain the retainer nut (C), clamp handle (A) and locking nut (D). (Clamp knob and washer on Model 470)
3. Replace the standard clamp with the adjustable clamp (E). The pin locations are the same.
4. Assemble the lock nut, clamp handle and retainer nut. (Washer and clamp knob on Model 470)
5. Replace the side guide in the desired mounting (three positions) location and secure the clamp and side guide.

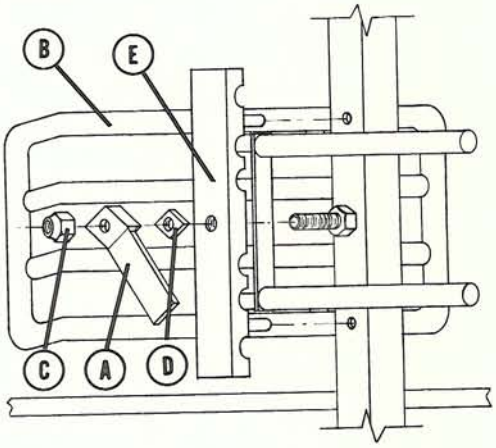

FIGURE 1 Side guide clamp right side view.

The side guide adjustment procedure remains the same.
Refer to the S-609 manual - set-up section - for the correct instructions.

IMPORTANT NOTICE TO PURCHASER:

The only obligation of the manufacturer and seller of "SCOTCH" Brand equipment shall be to repair or replace any mechanical part proved to be defective, provided the defect occurs within 90 days after date of purchase, and the so purchased item is returned immediately to the 3M factory or to an authorized service station designated by the manufacturer.

Neither manufacturer nor seller shall be liable for any loss or damage, direct or consequential, arising out of the use or inability to use the "SCOTCH" Brand equipment. No statement or recommendation not contained herein shall have any force or effect unless in an agreement signed by officers of seller and manufacturer.

Packaging Systems Division 3M COMPANY

LITHO IN U.S.A.

PS-ISGCR(54.25)R2

INSTALLATION AND SET-UP INSTRUCTIONS
"SCOTCH" BRAND P/N 78-8011-6860-6
STAINLESS STEEL BED - MODEL 174
FOR USE ON "SCOTCH" BRAND CAT. NO. S-609, MODEL 674

Attachment Consists Of:

Qty.	Description
1	Bed, Center Front
2	Bed, Side
1	Bed, Center Rear
2	Studs
1	Block, Carriage Bar Mounting
11	Screw, Cap Hex. Hd. 1/4-20 x 3/4 Lg.
11	Nut, Self Locking 1/4-20
2	Screw Cap Soc. Hd. 1/4-20 x 1 1/2 Lg.
2	Screw Cap Soc. Hd. 1/4-20 x 1 3/4 Lg.

Packaged Weight: 50 Lbs.

NOTE: Read the instructions through completely before starting the installation. Disconnect the main air supply to the S-609.

INSTALLATION INSTRUCTIONS

Wood Bed - Refer to Figure 1

1) Remove and retain box holder by loosening box holder screw.
2) Remove and discard screws, nuts and wood bed from frame.

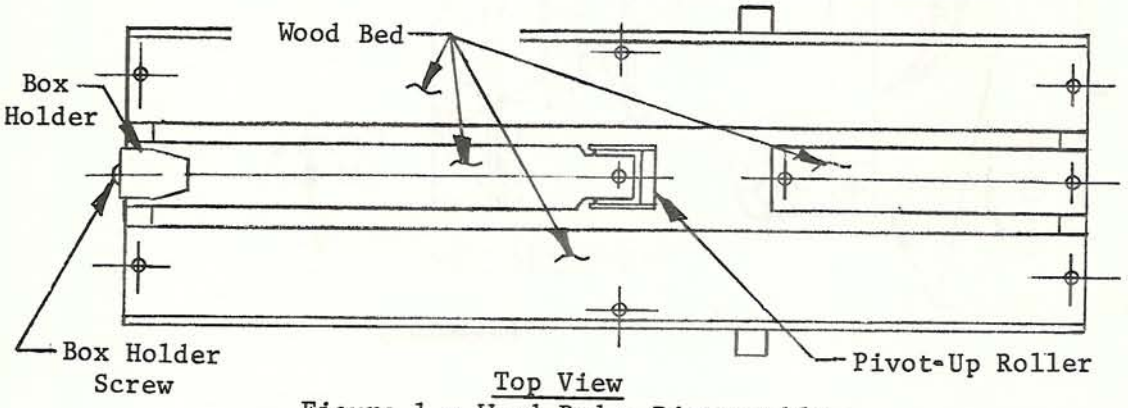

Figure 1 - Wood Bed - Disassembly

Pivot Up Roller - Refer to Figure 2

3) Remove and retain pivot up roller screw.
4) Remove and retain pivot up roller from center bed.

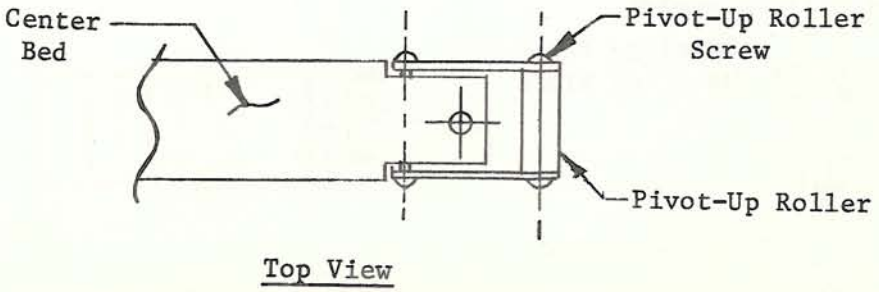

Figure 2 - Center Bed - Disassembly

Carriage Bar and Tape Bracket - Refer To Figure 3

5) Support Carriage bar and tape bracket at points shown.
6) Remove and retain carriage screw & washer.
7) Remove and retain support screw.
8) Remove and discard carriage bar mounting block and screws.

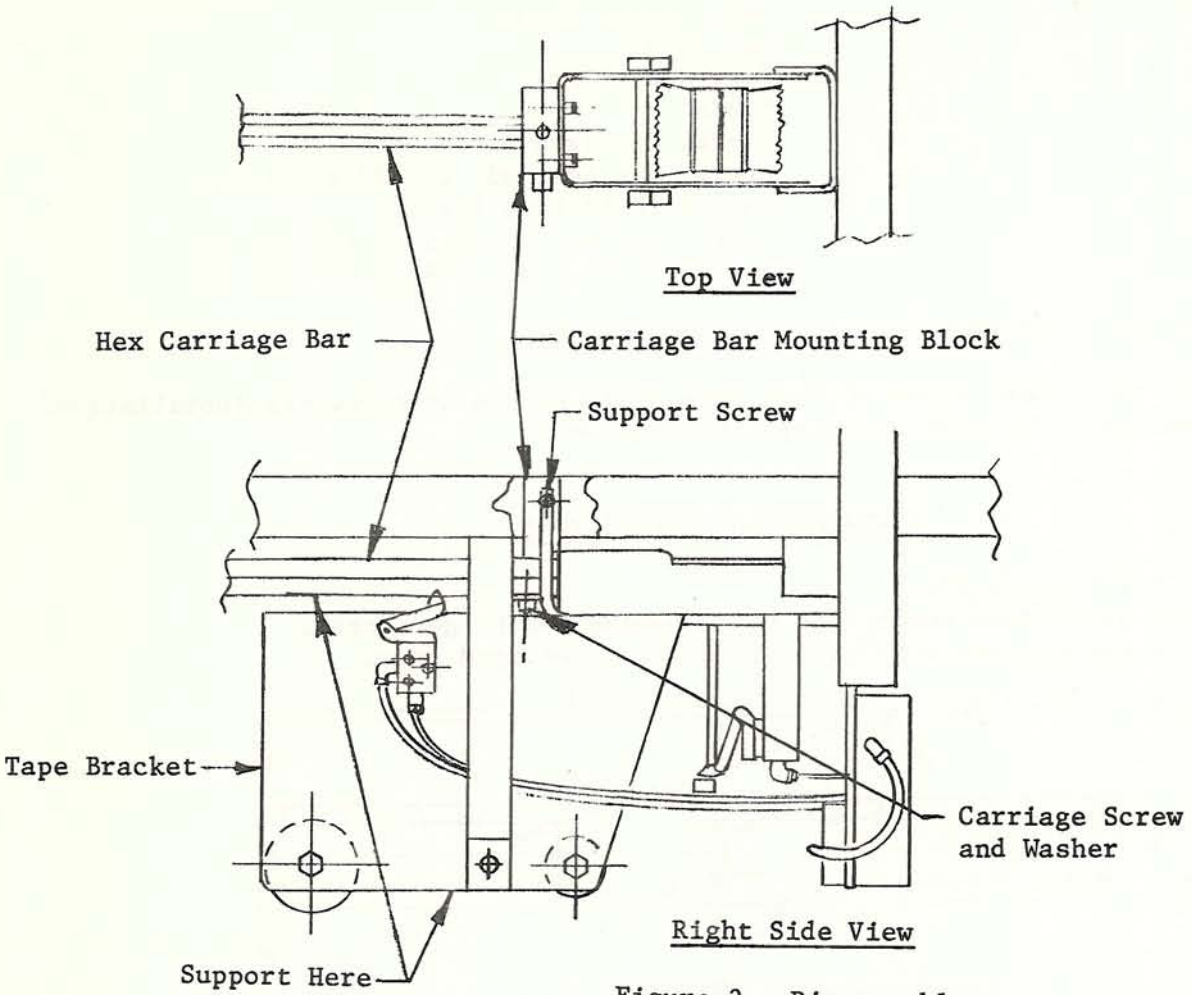

Figure 3 - Disassembly

Carriage Bar Mounting Block - Refer to Figure 4

1) Install carriage bar mounting block with two 1/4-20 x 1 3/4 screws, and two 1/4-20 self-locking nuts supplied with attachment.
2) Replace carriage screw and washer.
3) Replace support screw.

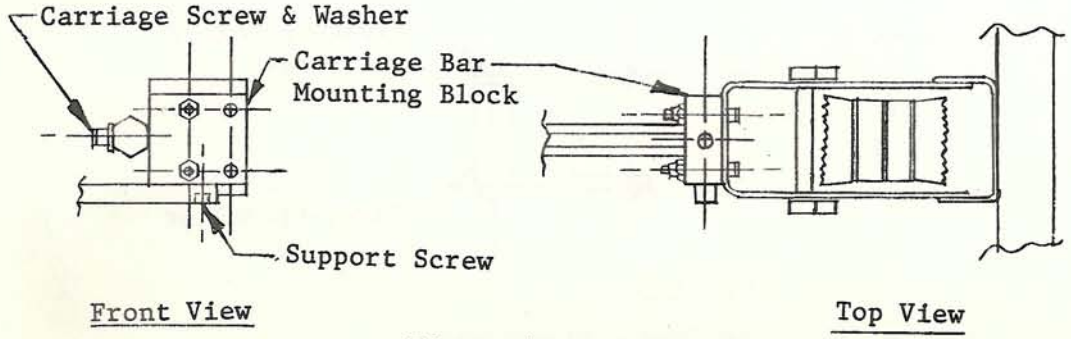

Figure 4 - Assembly

Pivot-Up Roller - Refer to Figure 5

4) Remove and discard studs from pivot-up roller, retain screws.
5) Install studs with screws in place of discarded studs. New studs supplied with attachment.
6) Replace pivot-up roller to carriage bar mounting block and tighten screw.

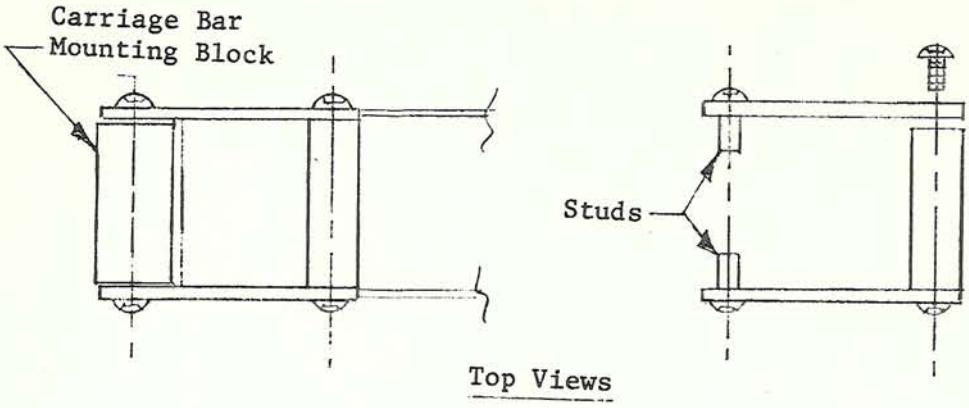

Figure 5 - Pivot-Up Roller Assembly

Stainless Steel Bed - Refer to Figure 6

7) Install center bed with one 1/4-20 x 3/4 Lg. screw, two 1/4-20 x 1 1/2 Lg. screws and three 1/4-20 self locking nuts supplied with attachment.
8) Install center rear and side beds with ten 1/4-20 x 3/4 Lg. screws and six self locking nuts supplied with attachment.
9) Replace box holder and tighten screw.

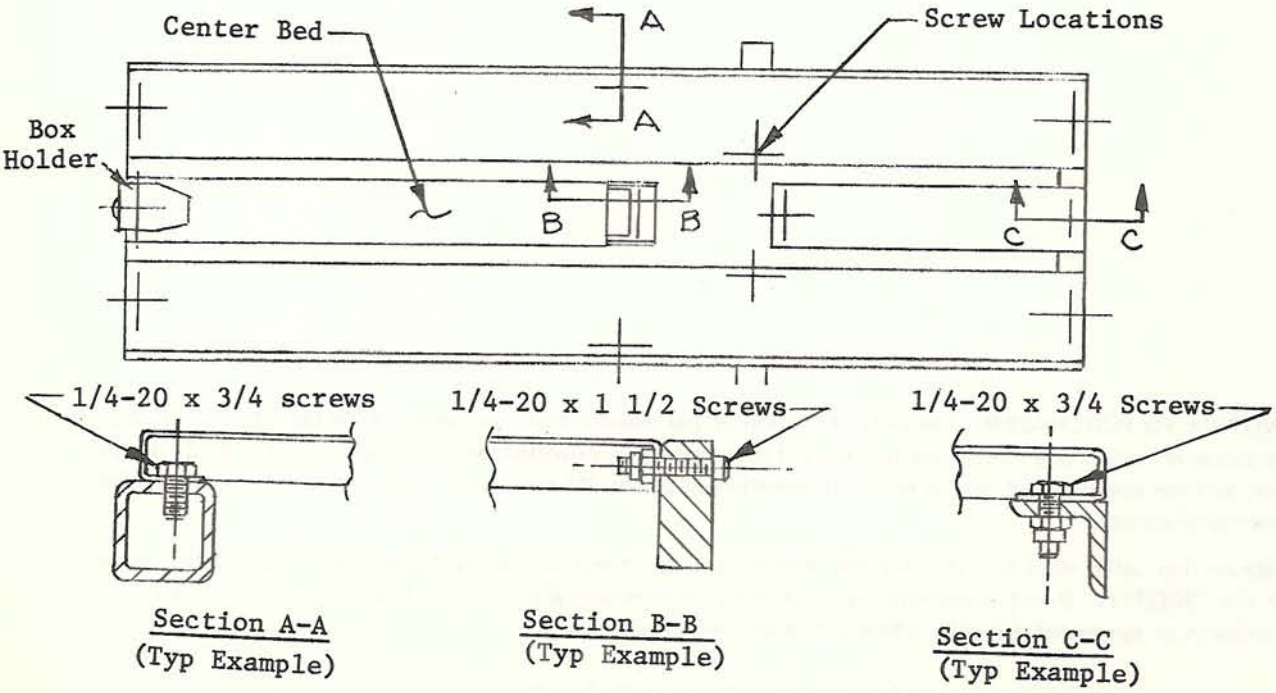

Figure 6 - Stainless Bed Assembly

10) Remove all tools and discarded parts.
11) Connect the main air supply.

IMPORTANT NOTICE TO PURCHASER: The only obligation of the manufacturer and seller of "SCOTCH" Brand equipment shall be to repair or replace any mechanical part proved to be defective, provided the defect occurs within 90 days after date or purchase, and the so-purchased item is returned immediately to the 3M factory or to an authorized service station designated by the manufacturer.

Neither manufacturer nor seller shall be liable for any loss or damage, direct or consequential, arising out of the use or inability to use the "SCOTCH" Brand equipment. No statement or recommendation not contained herein shall have any force or effect unless in an agreement signed by officers of seller and manufacturer.

Packaging Systems Division 3M COMPANY

34-7004-7016-3(94.05)R