3M

Instructions and Parts List

3M-Matic™

800r3 Type 19500

Random

Case Sealer

with

AccuGlide™ II

Taping Heads

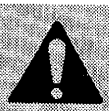

Important Safeguards

Read "Safety Labels", pages 3-5 and also operating "Warnings", page 17 BEFORE INSTALLING OR OPERATING THIS EQUIPMENT.

Important

It is recommended you immediately order the spare parts listed on page 33. These parts are expected to wear through normal use and should be kept on hand to minimize production delays.

Serial No. _____

For Reference, record taping head(s) serial number(s) here.

3M Masking and Packaging Systems Division
3M Center Bldg. 220-8W-01
St. Paul, MN 55144-1000

"3M-Matic" and "AccuGlide" are Trademarks of 3M, St. Paul, MN 55144-1000

Litho in U.S.A.

© 3M 1995 44-0009-1875-3(B107.0)

To Our Customers:

This is the 3M-Matic™/AccuGlide™/Scotch™ brand equipment you ordered. It has been set up and tested in the factory with "Scotch" brand tapes. If technical assistance or replacement parts are needed, call or Fax the appropriate number listed below.

Included with each machine is an Instructions and Parts List manual.

Technical Assistance:

3M-Matic™ Helpline – 1-800/328 1390. Please provide the customer support coordinator with the machine number, machine type/model and serial number. If you have a technical question that does not require an immediate response, you may Fax it to 715/381 0248.

Replacement Parts and Additional Manuals

Order parts by part number, part description and quantity required. Also, when ordering parts and/or additional manuals, include machine name, number and type. A parts order form is provided at the back of this manual.

3M/Tape Dispenser Parts
241 Venture Drive
Amery, WI 54001-1325

1-800/344 9883
FAX# 715/268 8153

Minimum billing on parts orders will be $25.00. Replacement part prices available on request.

$10.00 restocking charge per invoice on returned parts.

Note : Outside the U.S., contact the local 3M subsidiary for parts ordering information.

3M

3M Packaging Systems Division
3M Center, Building 220-8W-01
St. Paul, MN 55144-1000

"3M-Matic", "AccuGlide" and "Scotch" are trademarks of 3M, St. Paul, Minnesota 55144-1000

Printed in U.S.A.

© 3M 1999 44-0009-1851-4(E79.0)

To Our Customers:

This is the 3M-Matic™/AccuGlide™/Scotch™ brand equipment you ordered. It has been set up and tested in the factory with "Scotch" brand tapes. If any problems occur when operating this equipment, and you desire a service call, or phone consultation, call, write or Fax the appropriate number listed below.

Included with each machine is an Instructions and Parts List manual.

SERVICE, REPLACEMENT PARTS AND ADDITIONAL MANUALS AVAILABLE DIRECT FROM:

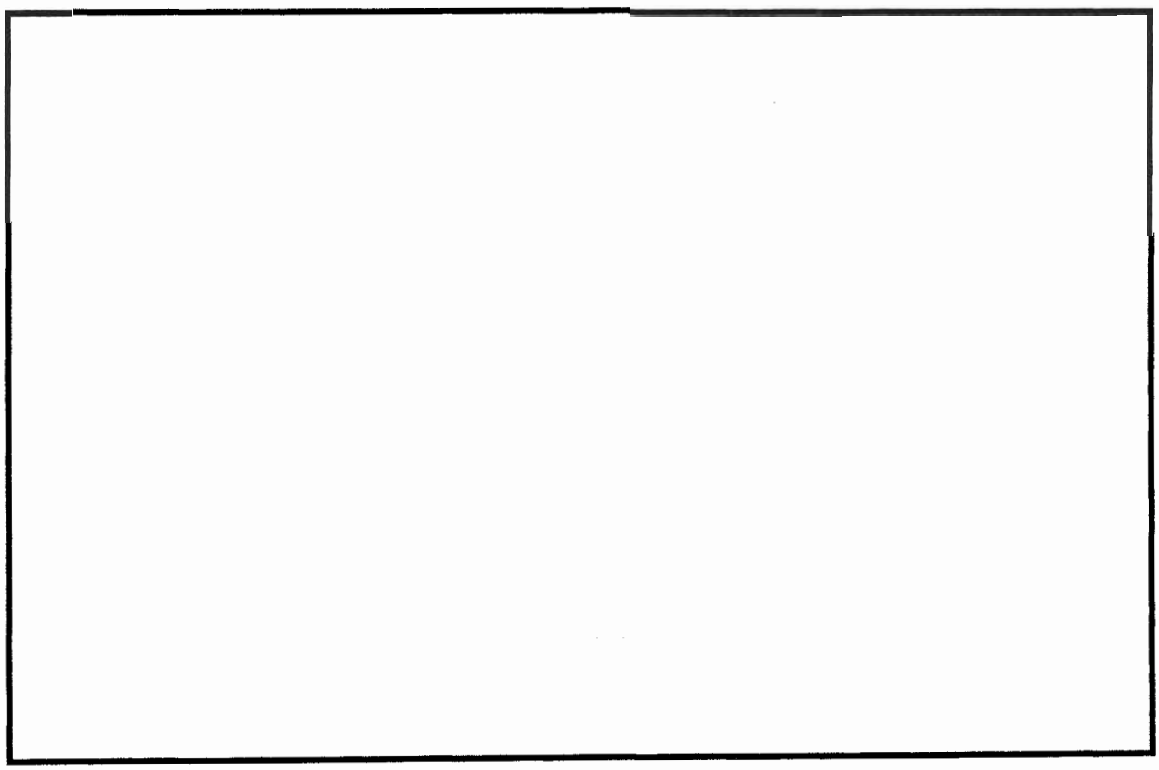

Order parts by part number, part description and quantity required. Also, when ordering parts and/or additional manuals, include machine name, number and type.

3M

3M Packaging Systems Division

3M Center, Building 220-8W-01
St. Paul, MN 55144-1000
1-800/328 1390

"3M-Matic", "AccuGlide" and "Scotch" are trademarks of 3M, St. Paul, Minnesota 55144-1000

Printed in U.S.A.

© 3M 1999 44-0009-1852-2(D79.0)

Instruction Manual

800r3 Random Case Sealer, Type 19500

This instruction manual is divided into two sections as follows:

Section I Includes all information related to installation, operation and parts for the case sealer.
Section II Includes specific information regarding the AccuGlide™ II STD 3 Inch Taping Heads.

Table of Contents

Page

Section I – 800r3 Random Case Sealer

Description 1

Equipment Warranty and Limited Remedy 2

800r3 Contents 2

Safety Labels ..... 3 - 5

Specifications ..... 7 - 9

Installation and Set-Up ..... 10 - 12
- Receiving and Handling 10
- Machine Set-Up ..... 10 - 12
  - Packaging and Separate Parts 10
  - Tape Drum Bracket 10
  - Conveyor Bed Height 10
  - Tape Leg Length 10
  - Box Size Capacity of Case Sealer 11
  - Pneumatic Connection 11
  - Electrical Connection and Controls 12
  - Initial Start-Up of Case Sealer 12

Operation ..... 13 - 18
- Tape Loading/Threading 17
- Box Sealing 18

Maintenance ..... 19 - 21
- Cleaning 19
- Lubrication 19
- Circuit Breaker 20
- Blade Replacement, Taping Head 20
- Drive Belts 20

Adjustments 23
- Drive Belt Tension 23
- Taping Head Adjustments 23

(Table of Content continued on next page)

Table of Contents (Continued)

		Page
Special Set-Up Procedure		24 - 25
Changing Tape Leg Length		24
Box Height Range		24 - 25
Troubleshooting		27 - 30
Electrical Diagram		31
Pneumatic Diagram		32
Parts and Service Information		33
Options/Accessories		34
Replacement Parts Illustrations and Parts Lists	Yellow Section	35 - 65

Section II – AccuGlide™ II STD 3-Inch Taping Head

Description

The **3M-Matic™ 800r3 Random Case Sealer** with **AccuGlide™ II** Taping Heads is designed to apply a "C" clip of **Scotch™** brand pressure-sensitive film box sealing tape to the top and bottom center seam of regular slotted containers. The case sealer automatically adjusts to a wide range of box sizes (see "Specifications – Box Weight and Size Capacities", page 8).

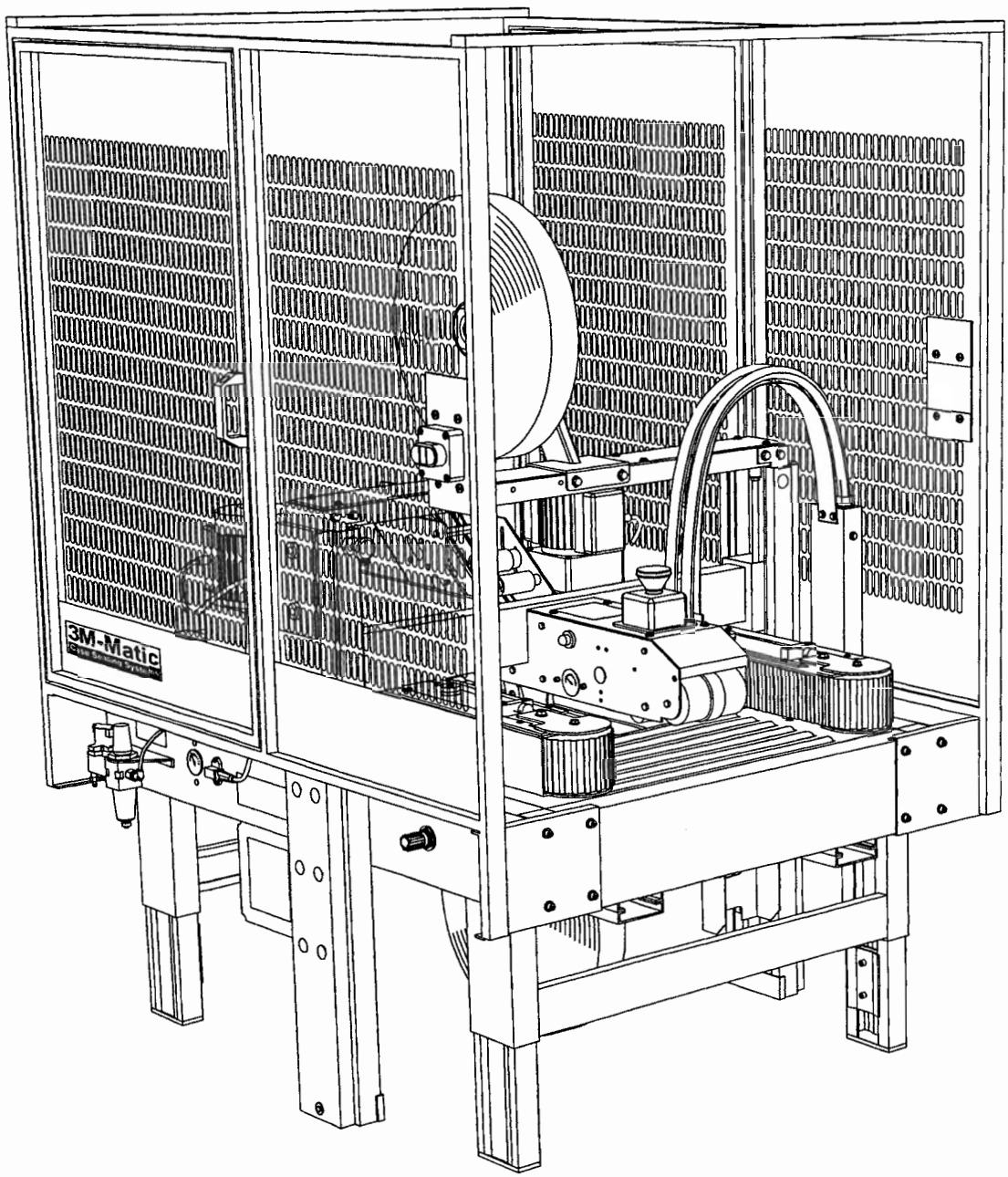

3M-Matic™ 800r3 Random Case Sealer, Type 19500

Equipment Warranty and Limited Remedy: THE FOLLOWING WARRANTY IS MADE IN LIEU OF ALL OTHER WARRANTIES, EXPRESS OR IMPLIED, INCLUDING, BUT NOT LIMITED TO, THE IMPLIED WARRANTY OF MERCHANTABILITY, THE IMPLIED WARRANTY OF FITNESS FOR A PARTICULAR PURPOSE AND ANY IMPLIED WARRANTY ARISING OUT OF A COURSE OF DEALING, A CUSTOM OR USAGE OF TRADE:

3M sells its **3M-Matic™ 800r3 Random Case Sealer, Type 19500** with the following warranties:

1. The Taping Head knife blades, springs and rollers will be free from all defects for ninety (90) days after delivery.
2. All other Taping Head parts will be free from all defects for three (3) years after delivery.
3. The gearmotor will be free from all defects for one (1) year after delivery.
4. All other parts will be free from all defects for ninety (90) days after delivery.

If any part is proved to be defective within its warranty period, then the exclusive remedy and 3M's and seller's sole obligation shall be, at 3M's option, to repair or replace the part, provided the defective part is returned immediately to 3M's factory or an authorized service station designated by 3M. A part will be presumed to have become defective after its warranty period unless the part is received or 3M is notified of the problem no later than five (5) calendar days after the warranty period. If 3M is unable to repair or replace the part within a reasonable time, then 3M, at its option, will replace the equipment or refund the purchase price. 3M shall have no obligation to provide or pay for the labor required to install the repaired or replacement part. 3M shall have no obligation to repair or replace (1) those parts failing due to operator misuse, carelessness, or due to any accidental cause other than equipment failure, or (2) parts failing due to non-lubrication, inadequate cleaning, improper operating environment, improper utilities or operator error.

Limitation of Liability: 3M and seller shall not be liable for direct, indirect, special, incidental or consequential damages based upon breach of warranty, breach of contract, negligence, strict liability or any other legal theory.

The foregoing Equipment Warranty and Limited Remedy and Limitation of Liability may be changed only by a written agreement signed by authorized officers of 3M and seller.

800r3 Contents

800r3 – (1) 800r3 Random Case Sealer, Type 19500
(1) Upper Tape Drum/Bracket
(1) Tool Kit

Scotch™, **AccuGlide™**, and **3M-Matic™** are Trademarks of 3M, St. Paul, Minnesota 55144-1000

Safety Labels

Important – In the event the following safety labels are damaged or destroyed, **they must be replaced to ensure operator safety**. A label kit, part number 78-8098-8903-9 is available as a stock item or individual labels can be ordered. See Parts Illustration/List, Section I, pages 64 and 65.

The **"Warning - Hazardous Voltage"** label, shown in **Figure 1-2**, is attached to the frame next to the on/off switch. The label warns service personnel to unplug the power supply before attempting any service work on the case sealer.

Figure 1-2 – Electrical Warning Label

Two **"Warning Sharp Knife"** labels, shown in **Figure 1-1**, are attached to both sides of the upper frame at the location of the cut-off blade on the upper taping head. The labels warn operators and service personnel of the very sharp knife used to cut the tape at the end of the tape application.

Figure 1-1 – Knife Warning Label

The two **"Warning – Keep Away From Moving Belts"** labels, shown in **Figure 1-3**, are located on each side of the top surface of the machine bed at the infeed end. These labels warn operators and service personnel to keep hands away from this area when the drive belts are running.

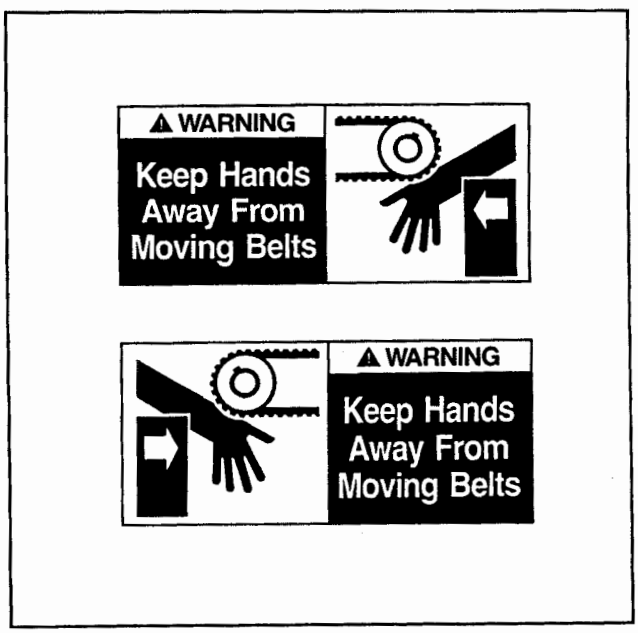

Figure 1-3 – Hands Warning Label

Safety Labels (Continued)

The **"Caution - Keep Hands Out Of This Area"** label, shown in **Figure 1-4**, is attached to the rear of the upper frame. It warns the operator to keep hands out of this area when the upper taping head mechanism is in operation.

Figure 1-4 – Hands Caution Label

800r3 case sealers are equipped with a push-button **Stop Switch** located on the upper taping head frame at the infeed end.

The **"Stop"** label, shown in **Figure 1-5**, reminds operators and casual personnel of the function of this switch.

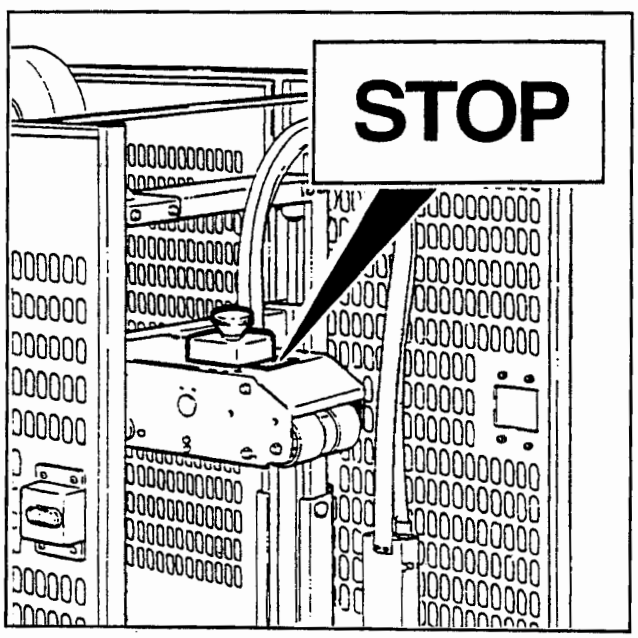

Figure 1-5 – Stop Switch Label

The **"Safety Instructions"** label, shown in **Figure 1-6,** is attached to the left side of the machine frame next to the main air regulator. It alerts the operator of minimum/maximum air pressure required to operate the case sealer.

Figure 1-6 – Safety Instructions Label

The **"Safety Instructions"** label, shown in **Figure 1-7**, is attached to the front of the upper frame. The label provides convenient safeguard instructions for the operator and service personnel.

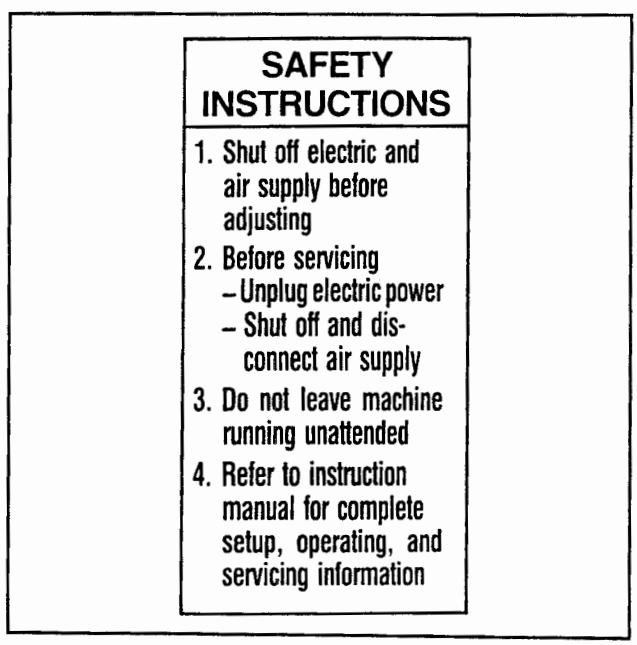

Figure 1-7 – Safety Instructions Label

Safety Labels (Continued)

The following two labels are located on the upper and lower taping heads. Replacement part numbers for these labels are listed below each label.

The **"Warning-Sharp Knife"** label warns operators and service personnel of the extremely sharp knife used to cut the tape at the end of the box sealing operation. The label, shown in **Figure 1-8**, is located on the orange blade guard between the applying roller assembly and the buffing roller assembly. **Never operate taping heads with blade guard removed.**

Before working with the taping heads or loading/threading tape, refer to Figures 3-1 and 3-2 in Section II to identify the knife blade location. **Keep hands out of these areas except as necessary to service the upper taping heads or to load/thread tape.**

Part Number 78-8070-1335-0

Figure 1-8 – Knife Warning Label

The **"Tape Threading Label"**, shown in **Figure 1-9,** is attached to the left side of both the upper and lower taping heads. This label provides a convenient tape threading diagram. More detailed tape loading and threading information is provided in this manual in the set-up procedure section.

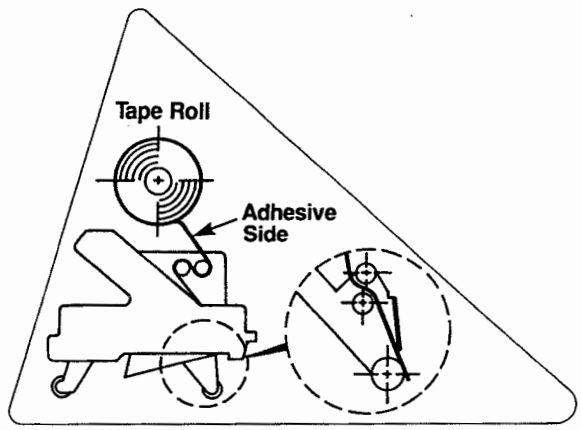

Part Number 78-8070-1365-7 (Upper Head)
Part Number 78-8070-1364-0 (Lower Head)

Figure 1-9 – Tape Threading Label

⚠ THIS SAFETY ALERT SYMBOL IDENTIFIES IMPORTANT SAFETY MESSAGES IN THIS MANUAL. READ AND UNDERSTAND THEM BEFORE INSTALLING OR OPERATING THIS EQUIPMENT.

THIS PAGE IS BLANK

Specifications

1. **Power Requirements:**

   Electrical – 115 VAC, 60 Hz, 3.8 A (440 watts)
   Pneumatic – 5 bar gauge pressure [70 PSIG]
   110 litre/min @ 21° C, 1.01 bar
   [3.75 SCFM] at 15 boxes per
   minute

   The machine is equipped with two 1/6 HP gearmotors and comes with a 2.4 meter [8 ft] long standard neoprene covered power cord and a grounded plug. Contact your 3M Representative for power requirements not listed above.

2. **Operating Rate:**

   Up to 15 boxes per minute. Actual production rate is dependent on box size, box size mix, and operator dexterity.

   Box drive belt speed is 24 m/m [78 FPM]

3. **Operating Conditions:**

   Use in dry, relatively clean environments at 4° to 50° C [40° to 120° F] with clean, dry, boxes.

IMPORTANT SAFEGUARD

MACHINE SHOULD NOT BE WASHED DOWN OR SUBJECTED TO CONDITIONS CAUSING MOISTURE CONDENSATION ON COMPONENTS.

4. **Tape:**

   Scotch™ brand pressure-sensitive film box sealing tapes.

5. **Tape Width:**

   48 mm [2.0 in] minimum to
   72 mm [3.0 in] maximum

6. **Tape Roll Diameter:**

   Up to 405 mm [16.0 in] maximum on a 76.2 mm [3.0 in] diameter core. (Accommodates all system roll lengths of **Scotch™** brand film tapes.)

7. **Tape Application Leg Length – Standard:**

   70 mm ± 6 mm [2.75 in ±.25 in]

   Tape Application Leg Length – Optional:
   (See "Special Set-Up Procedure", page 34)

   50 mm ± 6 mm [2.00 in ±.25 in]

8. **Box Board:**

   Style – regular slotted containers – RSC
   125 to 275 P.S.I. bursting test, single wall or double wall B or C flute.

(Specifications continued on next page)

Specifications (Continued)

9. **Box Weight and Size Capacities:**

Weight

Maximum – up to 38.6 kg [85 pounds]
Minimum – contents must support top flaps and weight must be sufficient to hold bottom flaps fully closed.

Box Size

OUTER COLUMNS IN STANDARD POSITION

MINIMUM
- Length – 205 mm [8.00 in]
- Width – 130 mm [5.25 in]
- Height – 120 mm [4.75 in]

MAXIMUM
- Length – Not Limited
- Width – 508 mm [20.0 in]
- Height – 533 mm [21.0 in]

OUTER COLUMNS IN OPTIONAL RAISED POSITION

MINIMUM
- Length – 205 mm [8.00 in]
- Width – 130 mm [5.25 in]
- Height – 232 mm [9.12 in]

MAXIMUM
- Length – Not Limited
- Width – 508 mm [20.00 in]
- Height – 644 mm [25.38 in]

Special modifications may be available for carton sizes not listed above. Contact your 3M Representative for information.

Note: The case sealer can accommodate most boxes within the size range listed above. However, if the box length (indirection of seal) to box height ratio is .5 or less, then several boxes should be test run to assure the proper machine performance.

DETERMINE THE BOX LIMITATIONS BY COMPLETING THIS FORMULA:

$$\frac{\text{Box Length In Direction Of Seal}}{\text{Box Height}} \quad \textbf{Must Be Greater Than .5}$$

Any box ratio approaching this limitation should be test run to assure performance.

(Specifications continued on next page.)

Specifications (Continued)

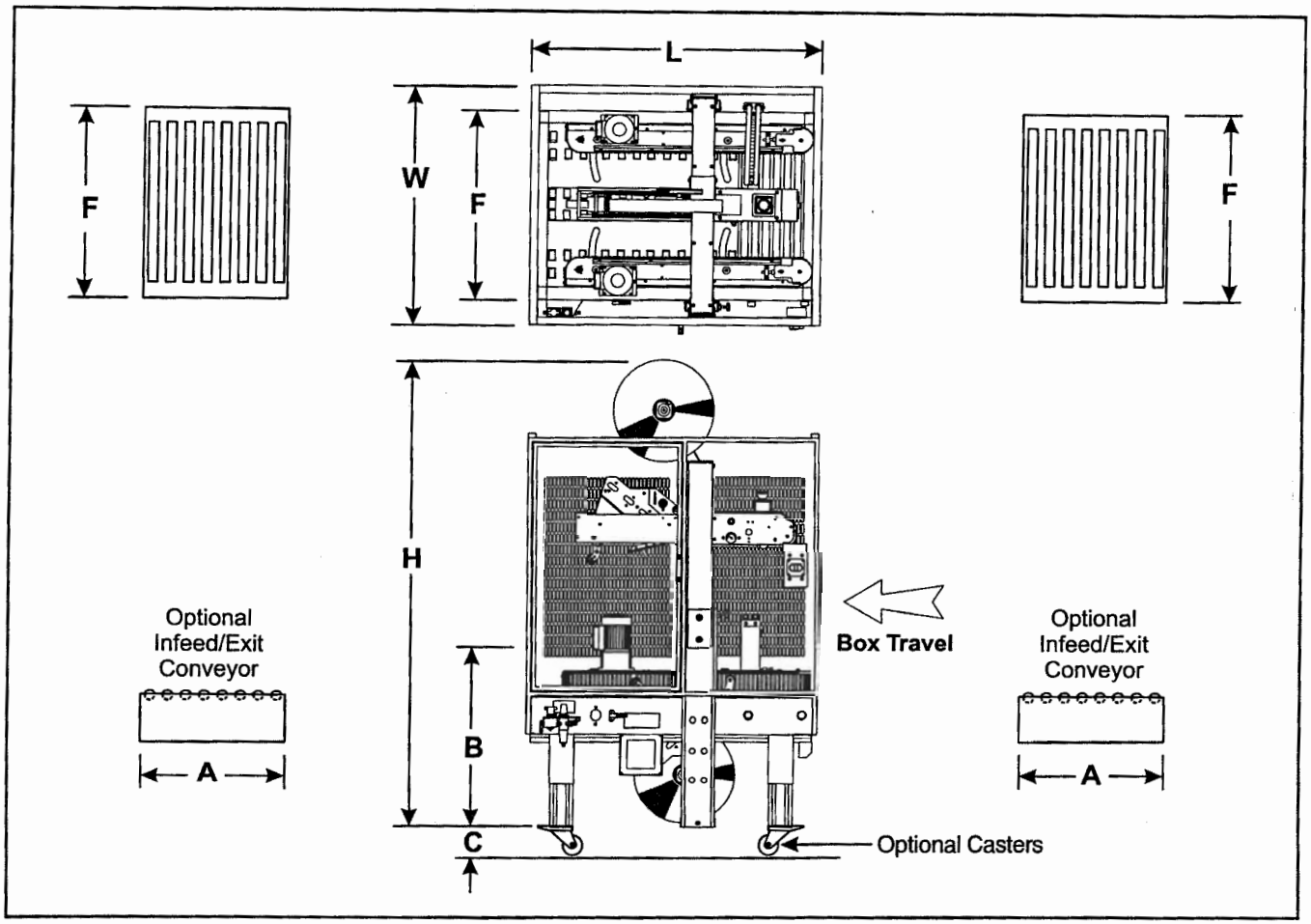

10. Machine Dimensions:

	W	W1	L	H	A*	B	C**	F
Minimum								
millimeters	970	1010	1180	1675	460	445	108	770
[Inches]	[38.25]	[39.75]	[46.50]	[66.00]	[18.00]	[17.50]**	[4.25]	[30.38]
Maximum								
millimeters				1955		720		
[Inches]	- -	- -	- -	[77.00]***	- -	[28.38]	- -	- -

* Exit conveyor is optional

** Casters are optional

*** When columns are adjusted to upper position, "H" maximum dimension is 2062 mm [81.19 inches]. (See "Special Set-Up Procedure", page 25)

Weight – 225 kg [500 pounds] crated (approximate)
208 kg [460 pounds] uncrated (approximate)

11. Set-Up Recommendations:

- Machine must be level.
- Customer supplied infeed and exit conveyors (if used) should provide straight and level box entry and exit.
- Exit conveyors (powered or gravity) must convey sealed boxes away from machine.

Receiving And Handling

After the machine has been uncrated, examine the case sealer for damage that might have occurred during transit. **If damage is evident, file a damage claim immediately** with the transportation company and also your 3M Representative.

Machine Set-Up

> **Important – Read "Warnings" on page 17 before attempting to set-up the case sealer for operation.**

The following instructions are presented in **the order recommended** for setting up and installing the case sealer. Following them step by step will result in an installation in your production line that best utilizes the many features built into the case sealer. Refer to Figure 3-1 to identify the various components of the case sealer.

> **Note** – A tool kit consisting of metric open end and hex socket wrenches is provided with the machine. These tools should be adequate to set-up the machine, however, other tools supplied by the customer will be required for machine maintenance.

PACKAGING AND SEPARATE PARTS

1. Lift cover off pallet after removing fasteners at bottom edge.
2. Install the upper tape drum bracket on the top crossbar, as shown in Figure 2-1.

TAPE DRUM BRACKET (Lower Taping Head)

Ensure that the tape drum bracket assembly is mounted straight down as shown in Figure 2-3A. The tape drum bracket assembly can be pivoted to provide clearance or for retrofit in certain cases.

Outboard tape roll mounting (Alternate Position) – Remove the tape drum bracket assembly, stud spacer and fasteners from the taping head. Install and secure on the infeed end of the lower frame, as shown in Figure 2-3B.

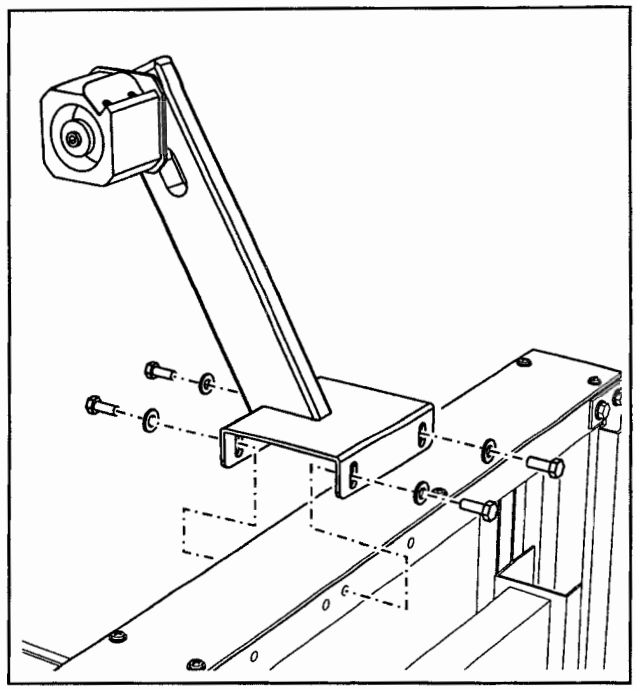

Figure 2-1 – Upper Tape Drum Bracket

CONVEYOR BED HEIGHT

Adjust conveyor bed height. The case sealer is equipped with four adjustable legs that are located at the corners of the machine frame. The legs can be adjusted to obtain different machine bed heights from 610 mm [24 in] minimum to 855 mm [35 in] maximum.

Refer to Figure 2-3C and set the machine bed height as follows:

1. Raise and block up the machine frame to allow adequate leg adjustment.
2. Loosen, but do not remove, two M8 x 16 socket head screws in one leg (use M6 hex wrench). Adjust the leg length for the desired machine bed height. Retighten the two screws to secure the leg. Adjust all four legs equally.

TAPE LEG LENGTH

Taping heads are pre-set to apply 70 mm [2.75 in] long tape legs. To change tape legs to 50 mm [2.00 in], see "Special Set-Up Procedures", page 28.

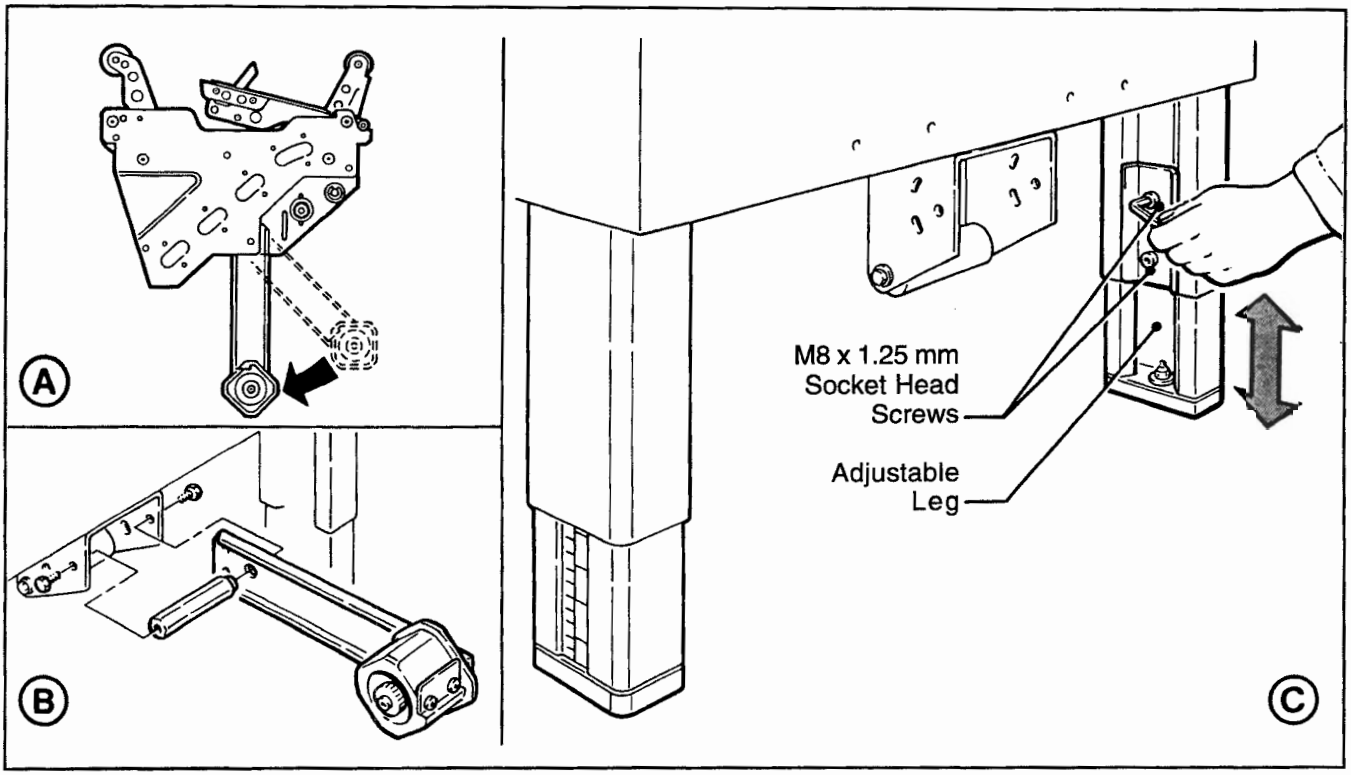

Figure 2-3 – Conveyor Bed Height Adjustment and Lower Tape Drum Bracket Position

BOX SIZE CAPACITY OF CASE SEALER

At its factory setting, the case sealer handles box sizes up to 533 mm [21.00 in] maximum height. If larger capacity is needed, the machine can be adjusted to accommodate boxes up to 644 mm [25.38 in] high. Refer to page 28, "Special Set-Up Procedures – Box Height Range", for set-up procedure.
Note – Adjusting machine to accommodate 644 mm [25.38 in] high boxes also increases minimum box size to 232 mm [9.12 in].

PNEUMATIC CONNECTION

WARNING – Use care when working with compressed air.

The case sealer requires a 6.5 bar gauge pressure [85 PSIG], 75 litre/min @ 21° C, 1.01 bar [2.5 SCFM] compressed air supply.

Using customer supplied air hose (8 mm [.31 in] I.D.) and clamp provided with machine, connect plant air to barbed fitting on inlet side of "On/Off" valve. See Figure 2-4. **Note: If another type of connector is desired, the barbed fitting can be replaced with the desired 1/4-18 NPT connector.**

Note – The air valve has provisions for lock out/tag out according to plant regulations.

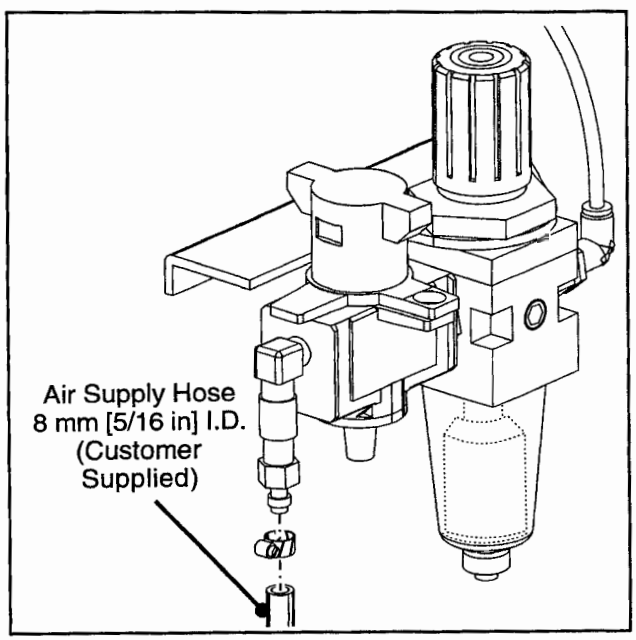

Figure 2-4 – Pneumatic Connection

Installation and Set-Up (Continued)

ELECTRICAL CONNECTION AND CONTROLS

The electrical control box, shown in Figure 3-1, contains the "On/Off" switch with pre-set circuit breaker and can be located on either side of the machine frame for customer operating convenience. A standard three conductor power cord with plug is provided at the back of the electrical control box for 115 Volt, 60 Hz, 6.4 Amp electrical service. The receptacle providing this service shall be properly grounded. Before the power cord is plugged into 115 Volt, 60 Hz outlet make sure the red "Off" button is depressed and that all packaging materials and tools are removed from the machine. **Do not plug electrical cord into outlet until ready to run machine.**

Note – Machines outside the U.S. may be equipped with 220/240 Volt, 50 Hz systems or other electrical requirements compatible with local practice.

INITIAL START-UP OF CASE SEALER

After completing the "Installation and Set-Up" procedure, continue through "Operation" for tape loading and start-up to be sure case sealer is properly adjusted to run boxes.

IMPORTANT – Before operating the case sealer, read the "Safety Labels", pages 3-5 and "Warnings" on page 17 as well as all of the "Operation" instructions.

Refer to Figure 3-1 and 3-2 to acquaint yourself with the various components and controls of the case sealer. Also see Figures 3-1 and 3-2 in Section II for taping head components.

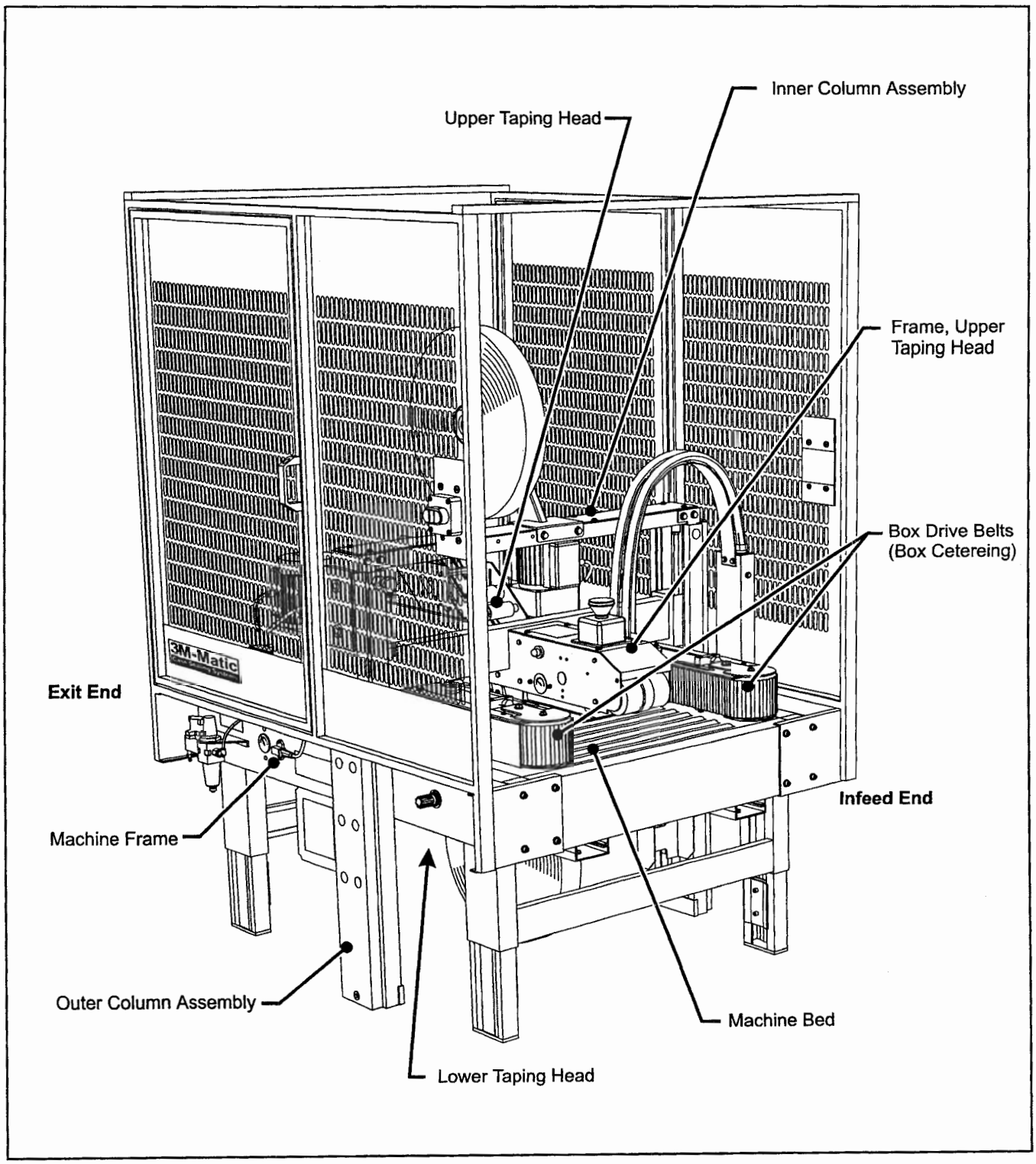

Figure 3-1 – Case Sealer Components

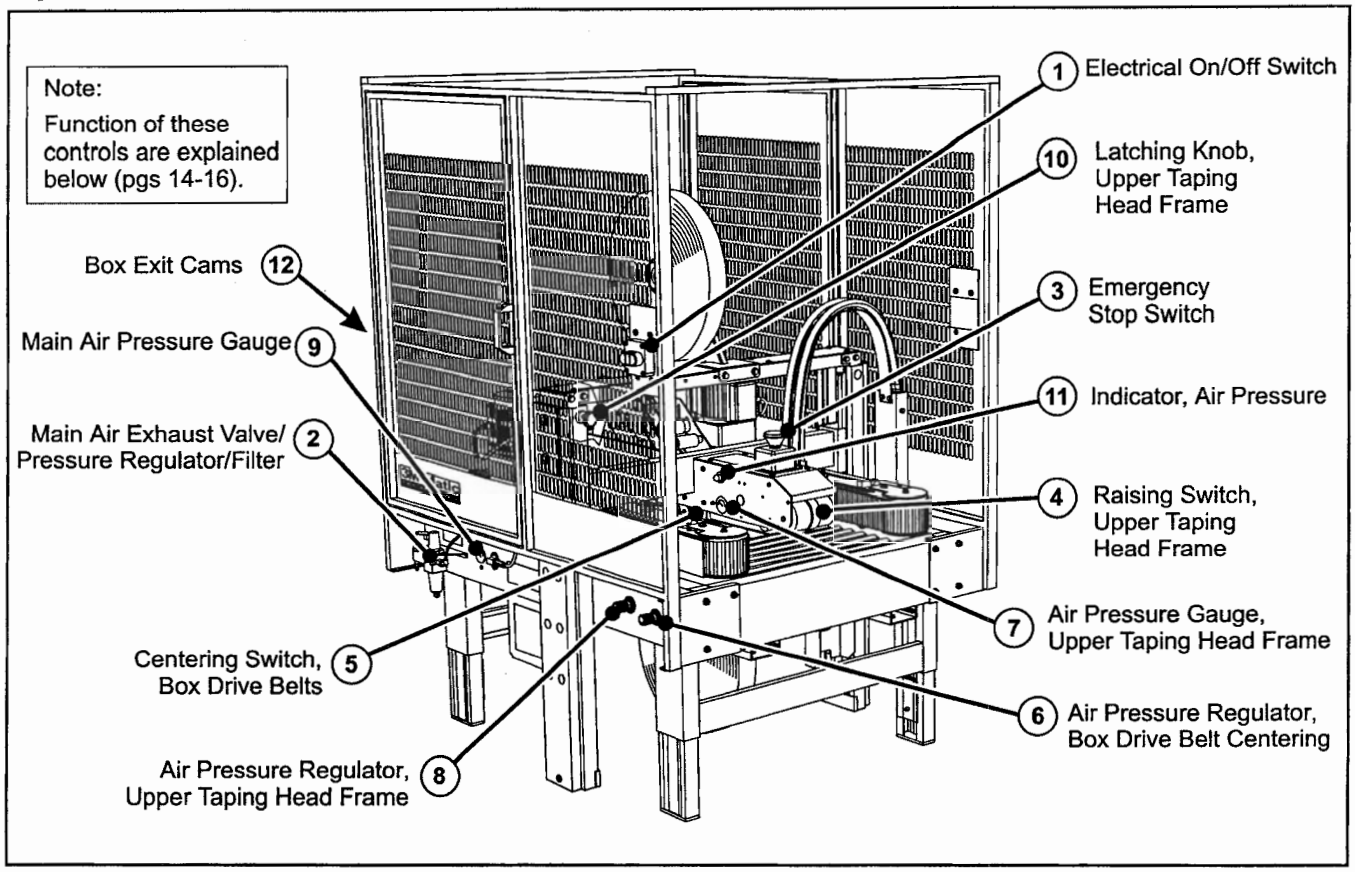

Figure 3-2 – Controls, Valves and Switches

1 **Electrical "On/Off" Switch**
The box drive belts are turned on and off with the electrical switch on the side of the machine guard at the infeed end.

> **Note** –If circuit becomes overloaded and circuit breaker trips, determine the cause of overload (wait two minutes), then push "On" button to restart machine.

2 **Main Air "On/Off" Valve/Pressure Regulator/ Filter** – Figure 3-3
This set of pneumatic components controls, regulates and filters plant air supply to the two separate control circuits of the case sealer.

"On/Off" Valve – "On" turn to "SUP" – "Off" turn to "EXH". **Note – Turning air supply "Off" automatically bleeds air pressure from the case sealer air circuits.**

Always turn the air "Off" when machine is not in use, when servicing the machine, or when connecting or disconnecting air supply line.

> **Note** – The air valve has provisions for lockout/ tagout according to plant regulations.

Pressure Regulator regulates main air pressure to the machine. To adjust pressure, pull knob up and turn – push down to lock setting.

Filter removes dirt and moisture from plant air before it enters the case sealer pneumatic circuits. If water collects in bottom of bowl, lift up on the valve on the bottom of bowl to drain.

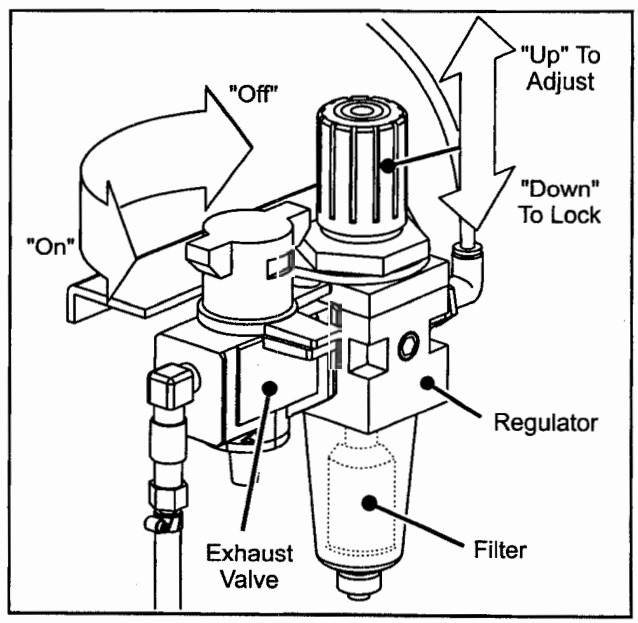

Figure 3-3 – "On/Off" Valve/Regulator/Filter

3 **Electrical "Stop" Switch**
This centrally located "Stop" switch stops the drive motors/belts. It is accessible from either side of the machine for operator convenience.

4 **Raising Switch, Upper Taping Head Frame**
This switch, when touched by the leading edge of a box, pneumatically raises the upper frame to allow insertion of a box under the upper frame, as the box moves under the switch, releasing it, the upper frame descends on the box and the drive belts convey the box through the machine. When switch is actuated by hand, the upper frame rises to its maximum height. Released, the upper frame descends to its rest position.

5 **Centering Switch, Box Drive Belts**
This pneumatic switch controls the closing (centering) of the drive belts. When switch is activated by a box passing under it, the drive belts close and center the box.

6 **Air Pressure Regulator, Box Drive Belt Centering** – Figure 3-4.
This regulator is used to adjust drive belt centering pressure. Pressure should be adequate to center boxes, but low enough to allow easy pushing of boxes under taping head. Regulator setting is locked by tightening screw as shown.

7 **Air Pressure Gauge, Upper Taping Head Frame**
This gauge, used in conjunction with the upper frame air regulator, provides operator with a reference pressure setting for various size/ weight boxes.

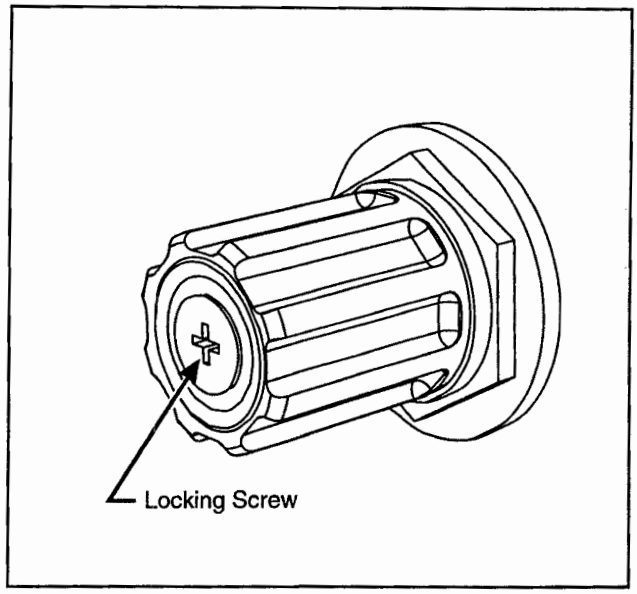

Figure 3-4 – Air Regulator, Drive Belts

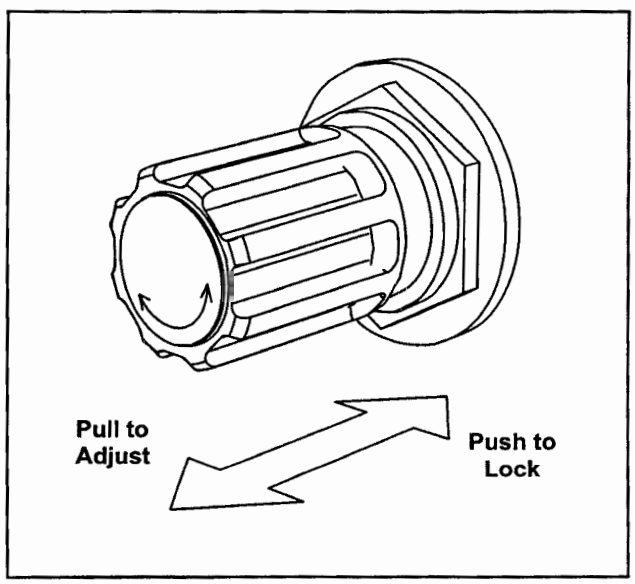

Figure 3-5 – Air Regulator, Upper Taping Head Frame

8 **Air Pressure Regulator, Upper Taping Head Frame** – Figure 3-5
Set nominally to control "down" pressure against the box. The regulator setting is adjusted as necessary to allow free movement of boxes through taping heads while maintaining boxes flaps in fully closed position. Decreasing air pressure will increase down pressure on boxes while increasing air pressure will decrease down force on boxes.

For boxes which are fully packed with products that support the top flaps, the adjustment of this regulator is not critical since the boxes can support the pressure of the upper frame at a wide range of regulator settings. However, if under-filled or fragile boxes are sealed, this regulator is used to set the upper frame at the minimum setting while still maintaining adequate closure of boxes.

The air regulator is adjusted by pulling out to adjust and pushing in to lock the setting as shown in Figure 3-5.

9 Main Air Pressure Gauge
Indicates main air regulator pressure setting. Air regulator should be adjusted so gauge reads 6.5 bar gauge pressure [85 PSIG].

10 Latching Knob, Upper Taping Head Frame
The mechanical latch is provided to hold the upper frame at the fully raised position for tape threading and maintenance.

To raise and latch the upper frame:

1. Push and hold the upper frame raising switch "A".
2. Push and hold latching knob "B".
3. Release switch "A".
4. Release knob "B".
5. Shut off air supply.

To release and lower the upper frame:

1. Turn on air supply.
2. Push and release switch "A".

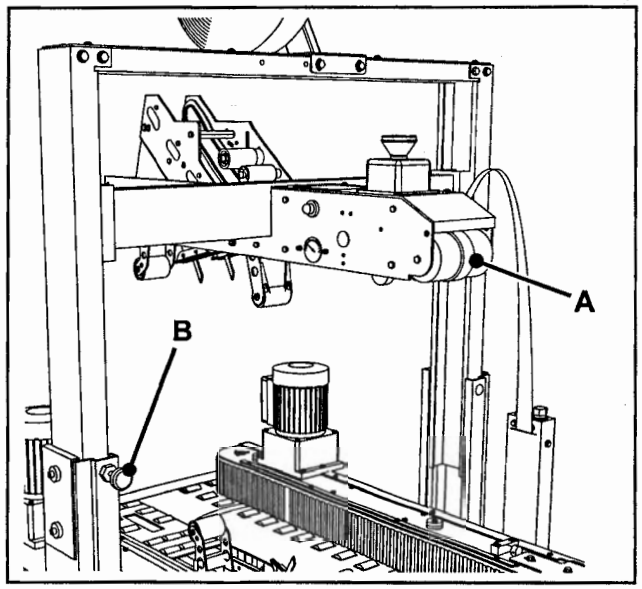

Figure 3-6 – Latching Knob, Upper Taping Head Frame

WARNING – Do not put hands beneath upper taping head frame when upper frame lowers to its rest position. Severe personal injury could result.

11 Indicator, Air Pressure
An "Optical" Warning Indicator for the compressed air circuit of the machine is located on the upper taping head frame just behind the red "Stop" button. When indicator is "Red", air circuit is on.

12 Box Exit Cams
These cams, when tripped by exiting box, signal drive belts to return to their fully open (rest) position.

⚠ WARNINGS

1. **Turn electrical and air supply off and disconnect before servicing taping heads or performing any adjustments or maintenance on the machine.**
2. **Turn electrical and air supply off when machine is not in use.**
3. **Before turning drive belts on, be sure no tools or other objects are on the conveyor bed.**
4. **Keep hands and loose clothing away from moving belts.**
5. **Never attempt to remove jammed boxes from the machine while machine is running.**
6. **Be aware of the pneumatically controlled movement of the upper frame and drive belts. Keep away from these components when air and electrical supplies are on.**
7. **When feeding boxes to the machine by hand, push box in from end only – DO NOT PUSH WITH HANDS ON ANY CORNER OF THE BOX.**
8. **Both the upper and lower taping heads utilize extremely sharp knife blades. The blades are located under the orange blade guard which has the "WARNING – SHARP KNIFE" label. Before loading tape, refer to Figures 3-1 and 3-2 in Section II to identify the blade location. Keep hands out of these areas except as necessary to service the taping heads.**
9. **Failure to comply with these warnings can result in severe personal injury and/or equipment damage.**

Tape Loading/Threading

See Section II, pages 7 and 8.

Note – If lower tape drum is mounted in lower outboard position remove taping head from machine bed by pulling straight up, insert threading needle in taping head and replace taping head. Install tape roll on drum (adhesive on tape leg up), thread tape leg under knurled roller on outboard mount, then attach tape leg to threading needle and pull tape through taping head with threading needle.

Box Sealing

1. Turn main air valve "On".

2. Push electrical switch "On" to start drive belts.

3. With access door closed, feed boxes to machine at minimum 460 mm [18 in] intervals.

> **⚠ WARNING – Keep hands away from drive belts when feeding boxes to machine. Push boxes from the end only, DO NOT push with hands on any corners of the box.**

Operator pushes box against raising switch on upper frame assembly, as shown in Figure 3-7, causing the upper frame (taping head) to be raised above the box.

4. Box is then pushed against belt centering roller switch (Figure 3-8), which closes drive belts and conveys box through machine.

   Once the box is conveyed from under the upper taping head, the upper frame assembly returns to its rest position, ready for insertion of next box. Also, box exiting machine, trips box exit cams which signal drive belts to return to their full open (rest) position.

5. Turn air and electrical supplies "Off" when machine is not in use.

6. Reload and thread tape as necessary.

7. Be sure machine is cleaned and lubricated according to recommendations in "Maintenance" section of this manual.

Notes

1. Machine or taping head adjustments are described in "Adjustments", Section I for machine or Section II for taping heads.

2. Box drive motors are designed to run at a moderate temperature of 40°C [104°F]. In some cases, they may feel hot to the touch.

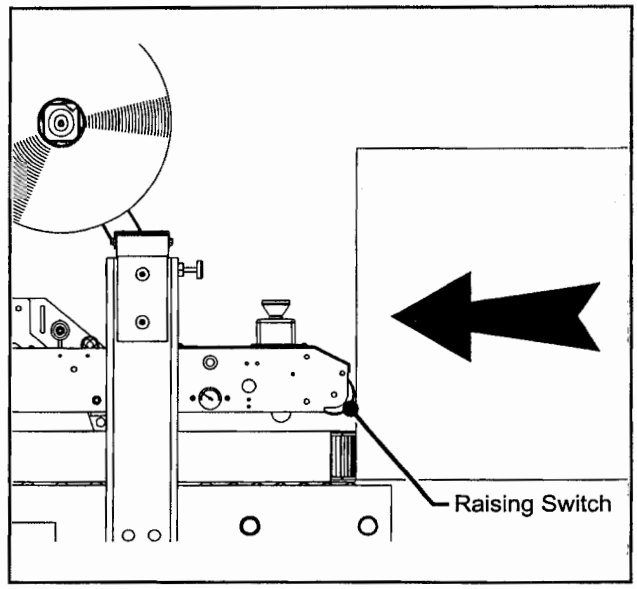

Figure 3-7 – Operation

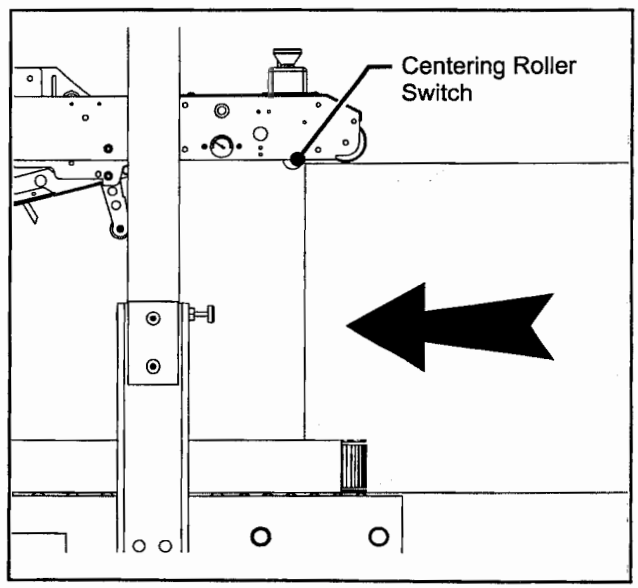

Figure 3-8 – Operation

Maintenance

The case sealer been designed for long, trouble free service. The machine will perform best when it receives routine maintenance and cleaning. Machine components that fail or wear excessively should be promptly repaired or replaced to prevent damage to other portions of the machine or to the product.

⚠ WARNING – Turn off electrical and air supplies and disconnect power cord from electrical supply before beginning maintenance. If electrical power is not disconnected, severe injury to personnel could result.

Cleaning

Note – Never attempt to remove dirt from taping heads by blowing it out with compressed air. This can cause the dirt to be blown inside the motor and onto sliding surfaces which may cause premature equipment wear. Never wash down or subject equipment to conditions causing moisture condensation on components. Serious equipment damage could result.

Regular slotted containers produce a great deal of dust and paper chips when processed or handled in equipment. If this dust is allowed to build-up on machine components, it can cause component wear and overheating of drive motor. The dust build-up can best be removed from the machine by a shop vacuum. Depending on the number and type of boxes sealed in the case sealer, this cleaning should be done approximately once per month. If the boxes sealed are dirty, or if the environment in which the machine operates is dusty, cleaning on a more frequent basis may be necessary. Excessive dirt build-up that cannot be removed by vacuuming should be wiped off with a damp cloth.

Lubrication

Like most other equipment, the case sealer must be properly lubricated to insure long, trouble free service. Most of the machine bearings are permanently lubricated and sealed and do not need to be greased. The drive motor is also permanently lubricated and does not require additional lubrication.

Figures 4-1 illustrates the frame points which should be lubricated every 250 hours of operation. Lubricate the points noted by solid arrow (➡) with SAE #30 non-detergent oil. Lubricate the points noted by outline arrow (⇨) with multipurpose grease.

Note – Wipe off excess oil and grease. It will attract dust and dirt which can cause premature equipment wear and jamming. Take care that oil and grease are not left on the surface of rollers around which tape is threaded, as it can contaminate the tape's adhesive.

Taping Head Lubrication – See Section II, "Maintenance – Lubrication", page 10.

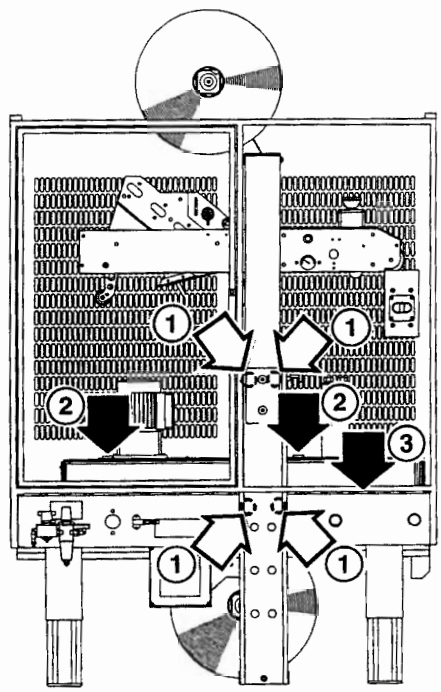

① Column Rollers (6 each column)

② Drive Assy. Mtg. Pivots (2 each drive assy.)

③ Infeed Rollers (6)

Figure 4-1 – Frame Lubrication Points

⚠ WARNING – Turn off electrical and air supplies and disconnect power cord from electrical supply before beginning maintenance. If power cord is not disconnected, severe injury to personnel could result.

Circuit Breaker

The case sealer is equipped with a circuit breaker which trips the "On/Off" switch to tripped position. If circuit is overloaded and circuit breaker trips, determine cause and correct (wait 2 minutes), then turn "On". Located inside the electrical control box on the side of the machine frame, the circuit breaker has been pre-set at 1.9 Amps and requires no further maintenance.

Blade Replacement, Taping Head

See Section II, "Maintenance – Blade Replacement", page 9.

Drive Belts

Note – 3M recommends the replacement of drive belts in pairs, especially if belts are unevenly worn.

REPLACEMENT – SEE STEPS 1 THRU 13

TENSION ADJUSTMENT – SEE STEPS 1-4, 6 and 10-13

1. Turn air supply on and raise and latch upper assembly in full up position. Turn air supply off.
2. Disconnect motor plug (A). Figure 4-2.
3. Remove and retain screw (B) and special washer (C) from front and rear arm assembly pivots.
4. Lift side drive assembly (D) up and off arm assembly pivots.

⚠ WARNING – Each drive assembly weighs approximately 20.4 kg [45 lbs]. To prevent injury, drive assembly should be lifted by two people, one at the front and one at the rear.

5. Remove and retain the four screws (E), washers (F) and side cover (G). See Figure 4-2.

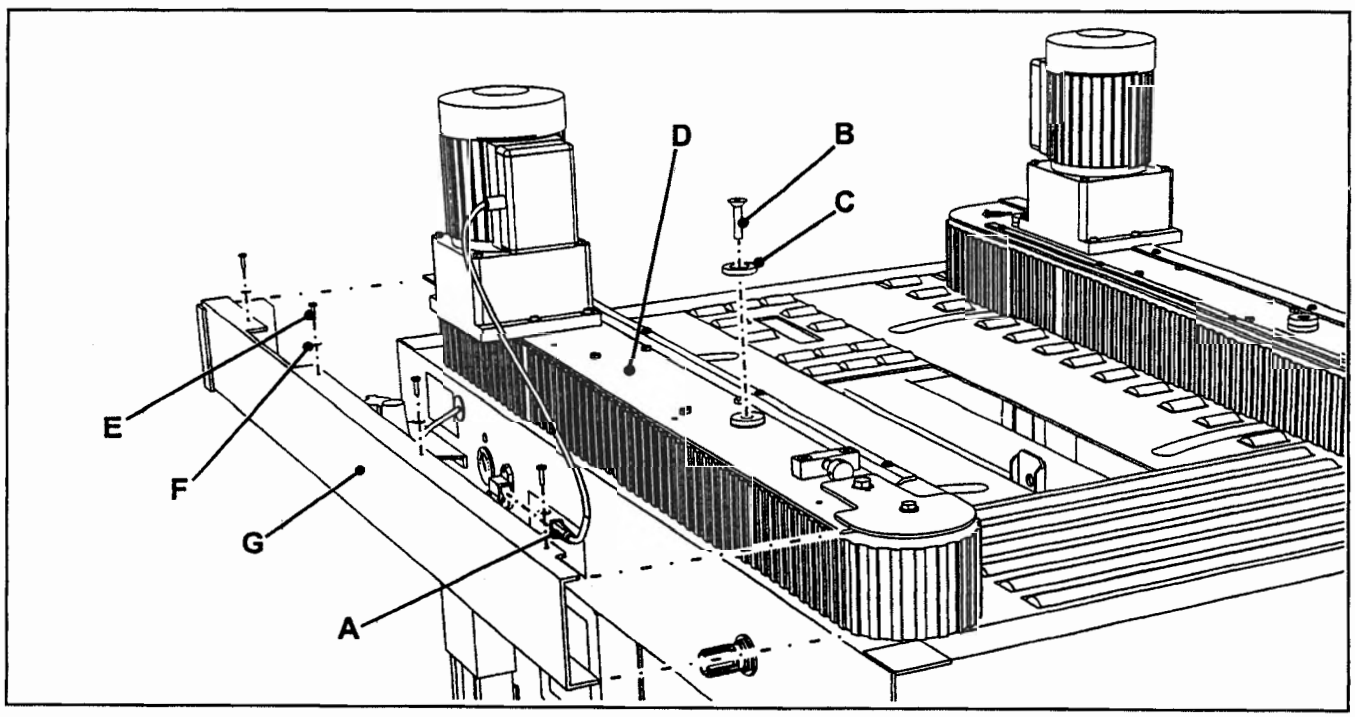

Figure 4-2 – Box Drive Belt (Left Side View – Infeed End)

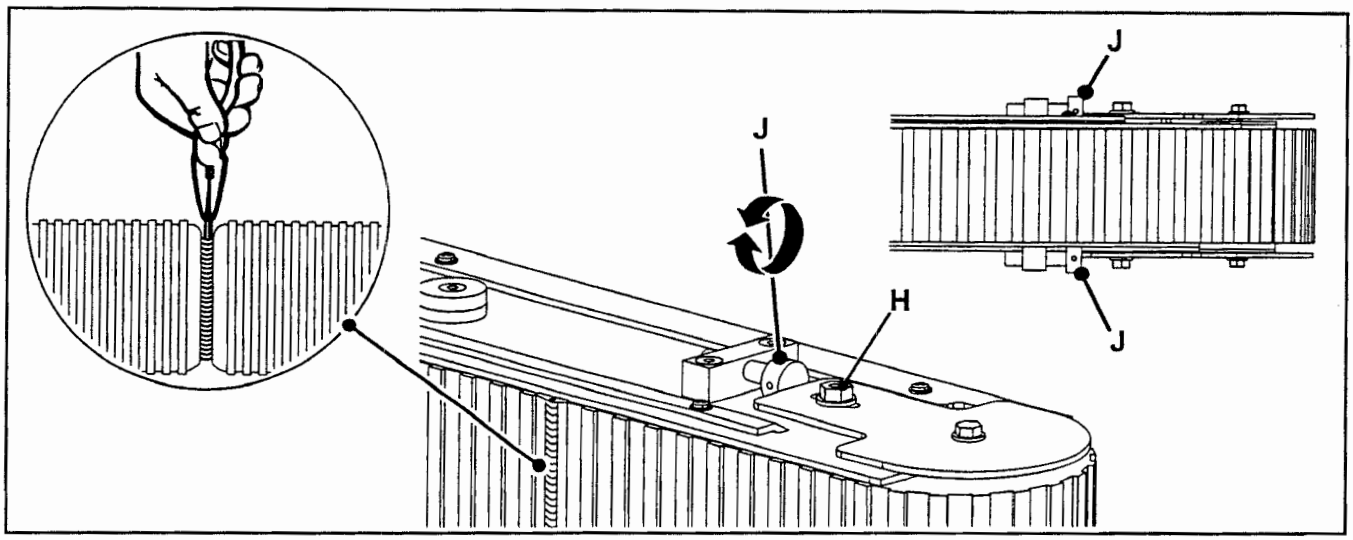

Figure 4-3 – Box Drive Assembly, Infeed End

6. Loosen, but do not remove lock nuts (H) on both the upper and lower belt tension assemblies. See Figure 4-3.

7. Turn belt adjustment screws (J) clockwise on both the upper and lower tension assemblies until belt is loose. See Figure 4-3.

8. Locate the belt lacing (joint) by turning the belt manually. Remove the pin with pliers. Remove and discard old belt.

9. Install the new belt around drive rollers and insert new pin. Pin **must not** extend beyond edge of belt.

> **Important** – Before installing new drive belt, check the belt inside surface for drive direction arrows and install belt accordingly. If no arrows are shown, the belt may be installed either way.

10. To set drive belt tension, turn adjustment screws (J) equally on both the upper and lower tension assemblies. Turn the screws counterclockwise to increase tension or clockwise to decrease tension. See Figure 4-3.

    Use a force gauge to pull the belt outward 25 mm [1 in] at midspan, as shown in Figure 4-4 with a moderate pulling force of 3.5 kg [7 lbs].

11. After adjusting belt tension, tighten lock nuts (H) on both the upper and lower tension assemblies.

12. Reverse procedures in Steps 1-6 to complete drive reassembly.

13. Repeat procedure for other belt.

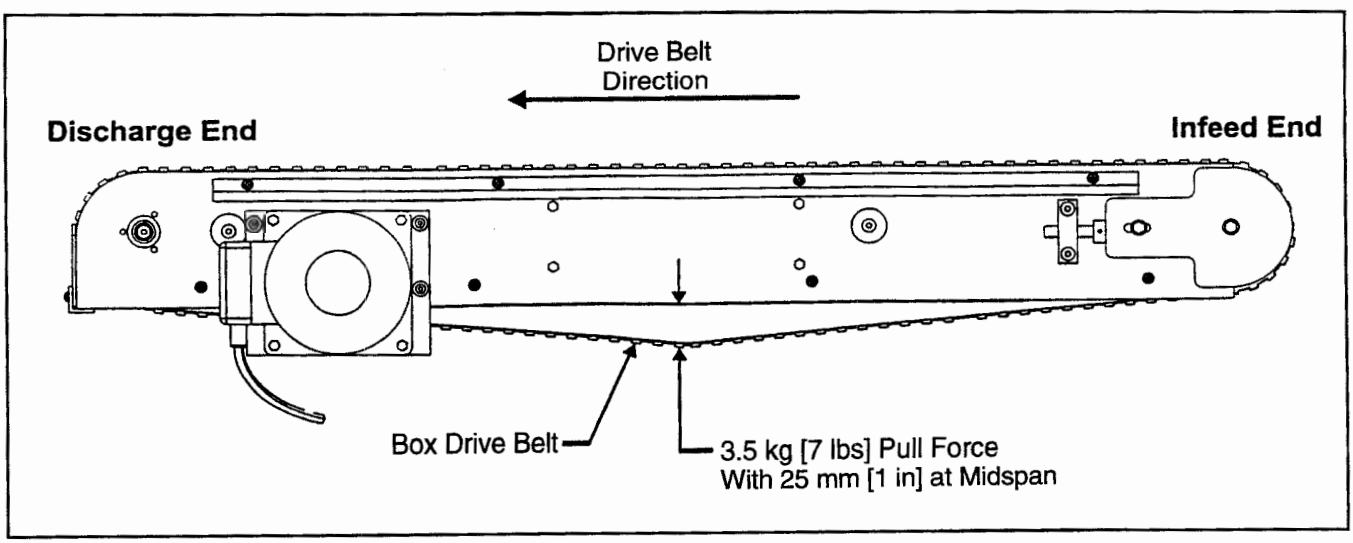

Figure 4-4 – Box Drive Belt Tension Adjustment, Top View

THIS PAGE IS BLANK

Adjustments

⚠ WARNING – Turn air supply and electrical power off and disconnect power cord from power supply before beginning adjustments. If power cord is not disconnected, severe injury to personnel could result.

Drive Belt Tension

Tension adjustment of the drive belts may be required during normal operation. Belt tension must be adequate to positively move the box through the machine and they should run fully on the surface of the pulleys at each end of the frame. The idler pulleys on the infeed end are adjusted in or out to provide proper belt tension. Each belt is adjusted separately.

Belt tension is obtained by tightening the adjustment screws so that a moderate pulling force of 3.5 kg [7 lbs] applied at the midspan, as shown in Figure 4-4, will deflect the belt 25 mm [1 in]. This will assure positive contact between the belt and the drive pulley on the discharge end of the taping head.

To adjust belts, see "Maintenance – Drive Belts", page 20.

Taping Head Adjustments – Refer to Section II

⚠ WARNING – Use care when working near tape cut-off blades on taping heads as blades are extremely sharp. If care if not taken, severe injury to personnel could result.

TAPE WEB ALIGNMENT – Section II, Page 11

TAPE DRUM FRICTION BRAKE – Section II, Page 11

APPLYING MECHANISM SPRING – Section II, Page 11

ONE-WAY TENSION ROLLER – Section II, Page 12

TAPE LEG LENGTH ADJUSTMENT – Section II, Page 13

⚠ WARNING – Turn air supply and electrical power off and disconnect power cord from power supply before beginning special set-up procedure. If power cord is not disconnected, severe injury to personnel could result.

Changing the Tape Leg Length
(From 70 to 50 mm [2.75 to 2.00 in])

Changing tape leg length to 50 mm [2 in] allows taping of smaller boxes. Refer to "Specifications – Box Weight and Size Capacities", page 8 for box sizes.

CASE SEALER FRAME

No changes required.

TAPING HEADS

⚠ WARNING – Use care when working near blades as blades are extremely sharp. If care is not taken, severe injury to personnel could result.

1. Remove upper taping head. Loosen and remove four (each) M6 x 25 flat head screws (A), special washers (B) and spacers (C) that fasten head to upper assembly as shown in Figure 5-1. **Support or hold taping head to keep it from falling when screws are removed.**

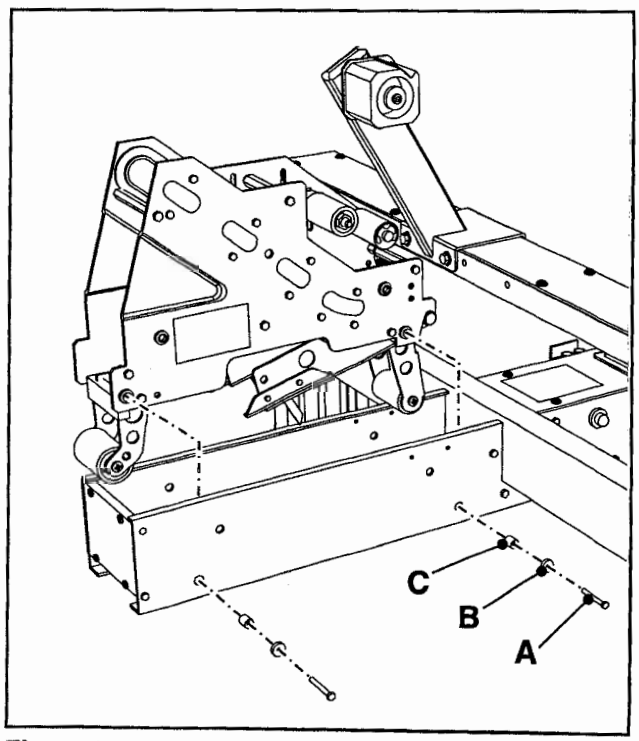

Figure 5-1 – Upper Taping Head Mounting

2. Turn air supply on and raise and latch upper assembly in full up position. Turn air supply off.
3. Remove lower taping head by pulling straight up.
4. Refer to Section II "Adjustments – Changing Tape Leg Length", page 13.

Box Height Range
(Outer Column – Re-Positioning)

⚠ WARNING – It is recommended that no less than two people assist on this set-up or severe injury or equipment damage could result.

Moving the outer columns to the upper set of mounting holes, increases the maximum box size (height) handled by the case sealer from 533 mm [21.00 in] to 644 mm [25.38 in]. (Dimensions given are with lift cylinders mounted in standard position.) **Note – This also increases the minimum box height from 120 mm [4.75 in] to 232 mm [9.12 in].**

Refer to Figure 5-2

1. With air on, raise and latch upper assembly in full raised position. **Be sure electrical supply is disconnected.**
2. Place solid blocks 495 to 535 mm [19.5 to 21.0 in] high under front and back of upper assembly as shown in Figure 5-2A.
3. Actuate raising switch to release upper assembly latch. (Upper assembly will rest on blocks.) **Turn off and disconnect air supply.**
4. Remove plastic plugs and M8 x 20 socket head capscrews from one side column (4 each). Slide side column up approximately 110 mm [4.25 in] and re-install capscrews. DO NOT TIGHTEN SCREWS. Repeat procedure for other side column.

Special Set-Up Procedure (Continued)

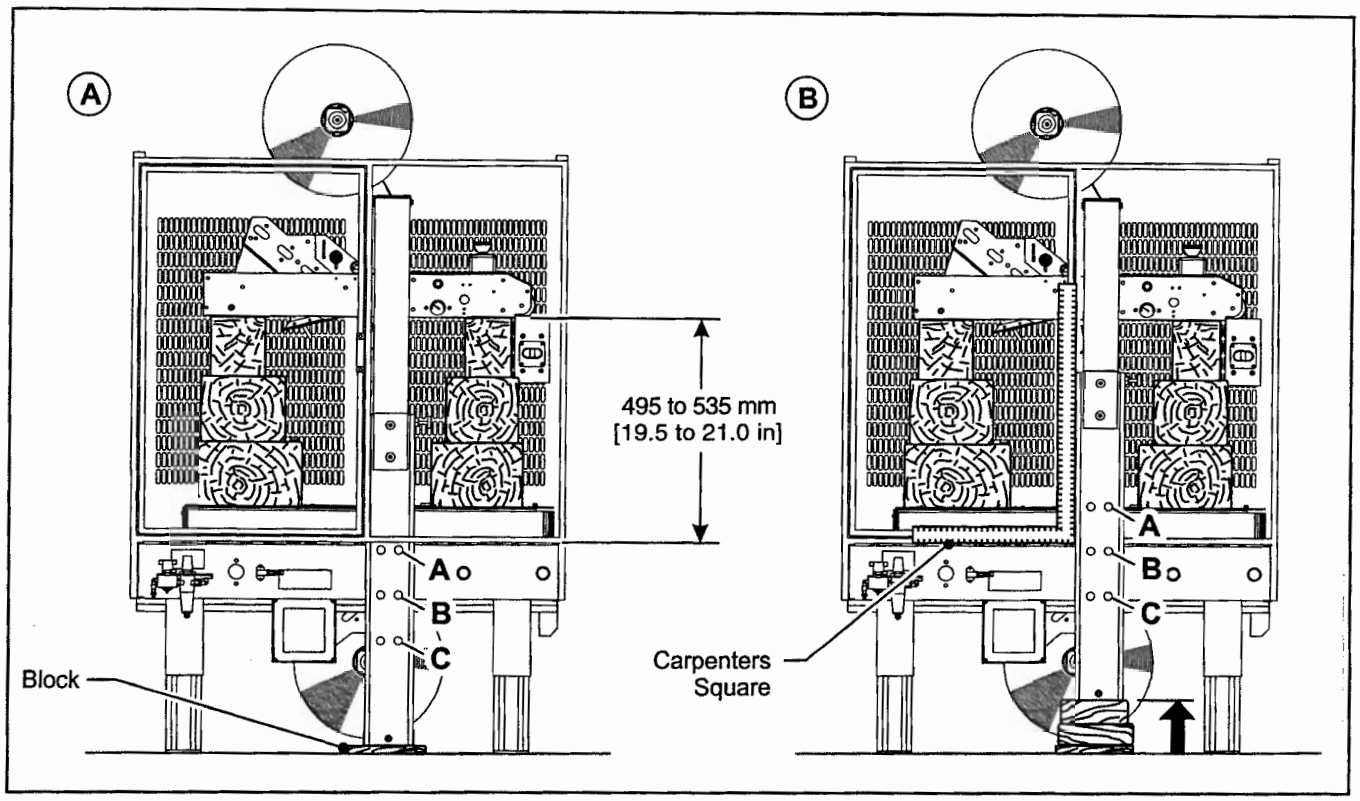

Figure 5-2 – Column Re-Positioning

5. Using carpenters square, line up column perpendicular to machine bed as shown in Figure 5-2B. Tighten capscrews and install plastic plugs. Repeat this procedure for both columns.

6. Connect and turn on air supply, actuate raising switch and latch upper assembly in full up position.

7. Remove blocking, unlatch and lower upper assembly.

THIS PAGE IS BLANK

Troubleshooting

Review Set-Up Procedure Section so that the operational components of the machine are understood. The Troubleshooting Guide lists some possible machine problems, causes and corrections.

Troubleshooting Guide

Problem	Cause	Correction
Drive belts do not convey boxes	Narrow boxes	Check machine specifications. Boxes are narrower than recommended, causing slippage and premature belt wear.
	Worn drive belts	Replace drive belts
	Top taping head does not apply enough pressure	Adjust the upper drive assembly force adjust regulator to increase the force against the top of the box. Turn air regulator counterclockwise.
	Taping head applying spring holder missing	Replace spring holder
	Taping head applying spring set too high	Reduce spring pressure
Drive belts do not turn	Worn or missing friction rings	Replace friction rings
	Drive belt tension too low	Adjust belt tension
	Electrical disconnect	Check power and electrical plug
	Circuit breaker not at correct setting	Set to correct current value
	Motor not turning	Evaluate problem and correct
Drive belts break	Worn belt	Replace belt
Squeaking noise as boxes pass through machine	Dry compression rollers	Lubricate compression rollers
	Dry column bearings	Lubricate column bearings
	Defective column bearings	Replace column bearings
Tape not centered on box seam	Tape drum not centered	Reposition tape drum
	Drive belts not centered	Adjust centering guides
	Box flaps not of equal length	Check box specifications

(Continued)

Troubleshooting Guide

Problem	Cause	Correction
Upper drive assembly does not move up or moves up slowly	Lower air pressure	Disconnect the air supply. Make sure main pressure regulator reads zero. Reconnect air supply and adjust regulator to read 5 bar [70 PSIG].
	Defective head raising valve	Clean or replace head raising valve
	Worn head raising valve actuator	Replace valve
	Clogged or damaged exhaust mufflers on the upper ends of the head raising cylinders	Clean or replace exhaust mufflers
	Defective head power valve	Clean or replace the head power valve
Upper taping head does not move down at the end of the taping cycle	Upper drive assembly force adjust regulator set too light	Adjust the upper drive assembly force adjust regulator to increase the force against the top of the box. Turn air regulator counterclockwise.
	Defective top drive assembly force adjust regulator	Replace regulator
	Defective "OR" valve	Clean or replace valve
	Defective head power valve	Clean or replace valve
Upper head assembly comes down too fast or too hard	Upper drive assembly force adjust regulator set too heavy	Adjust upper drive assembly force adjust regulator to decrease force against top of box. Turn regulator clockwise.
	Defective upper drive assembly force adjust regulator	Replace regulator
	Cushion screw misadjusted	Adjust cushion screw at base of cylinder
	Cushion screw missing	Replace screw
Centering drive assemblies move slower than normal	Centering force adjust regulator set too low	Adjust regulator
	Centering guide cylinder speed controls not in correct adjustment	Adjust speed controls mounted on centering guide cylinder
	Defective centering guide power valve	Clean or replace valve

(Continued)

Troubleshooting Guide

Problem	Cause	Correction
The tape leg on the front of the case is too long	The tape is threaded incorrectly	The tape must go around the wrap roller before going around the one-way tension roller
	The tape tension is too low	Adjust the one-way tension roller
	The knurled roller drags	Check for adhesive build-up between the knurled roller and its shaft. Clean and lubricate shaft. Remove all lubricant from roller surfaces.
	Tape tracks to one side or drags on the support tabs of applying frame	Adjust the tape web alignment
	The one-way tension roller is not correctly positioned	Position the roller in its mounting slot so that the tape extends just beyond the center line of the applying roller
	Taping head is not set up properly	Check leg length adjustments
The blade does not cut tape or the tape end is jagged or shredded	The blade is dull and/or has broken teeth	Replace the blade
	Tape tension is insufficient	Increase tape tension by adjusting the one-way tension roller
	Adhesive has built up on the blade	Clean and adjust the blade
	The blade is not positioned properly	Make sure the blade is bottomed out against the mounting bolts
	The blade is dry	Lubricate the blade oiler pad on the blade guard
	The blade is in backwards	Mount the blade so that the beveled edge is away from the entrance end of the head
	One or both cutter springs are missing or stretched	Replace the defective spring(s)
	Tension roller surface is not fully contacting the taping head frame	Make sure one-way bearing is below the surface of the tension roller. If not, press bearing further into roller or replace roller.

(Continued)

Troubleshooting Guide

Problem	Cause	Correction
Tape is tabbing on the trailing leg on the back of the box	There is excess tension on the tape drum assembly and/or the one-way tension roller assembly	Adjust the one-way tension roller and/or the tape drum assembly
	Rollers in the tape path do not rotate freely	Clean adhesive deposits from the surface, ends, and shafts of the rollers. Then lubricate roller shafts. Remove all lubricant from roller surfaces.
	The blade is not cutting tape properly	Refer to tape cutting problems
	The tape is threaded incorrectly	Rethread the tape
	Applying mechanism spring has too little tension	Move spring hook to next tighter hole
The tape end does not stay in the application position in front of the applying roller	The tape is incorrectly threaded	Rethread the tape
	Flanged knurled roller overruns on return of applying mechanism to its rest position	Adjust tension roller position in mounting slot to lengthen tape leg
	Applying roller overruns on return of applying mechanism to its rest position	There should be a slight drag when rotating the applying roller. If not, check friction springs and/or friction pins and replace if necessary
	The one-way tension roller is not correctly positioned	Position roller in its mounting slot so that tape end extends beyond center line of applying roller
	The one-way tension roller is defective	Replace the one-way tension roller

WARNING – Electrical service procedures must be performed by a qualified electrical technician. Turn off and disconnect electrical and pneumatics before servicing unit. High voltage inside electrical enclosure can cause severe injury or death.

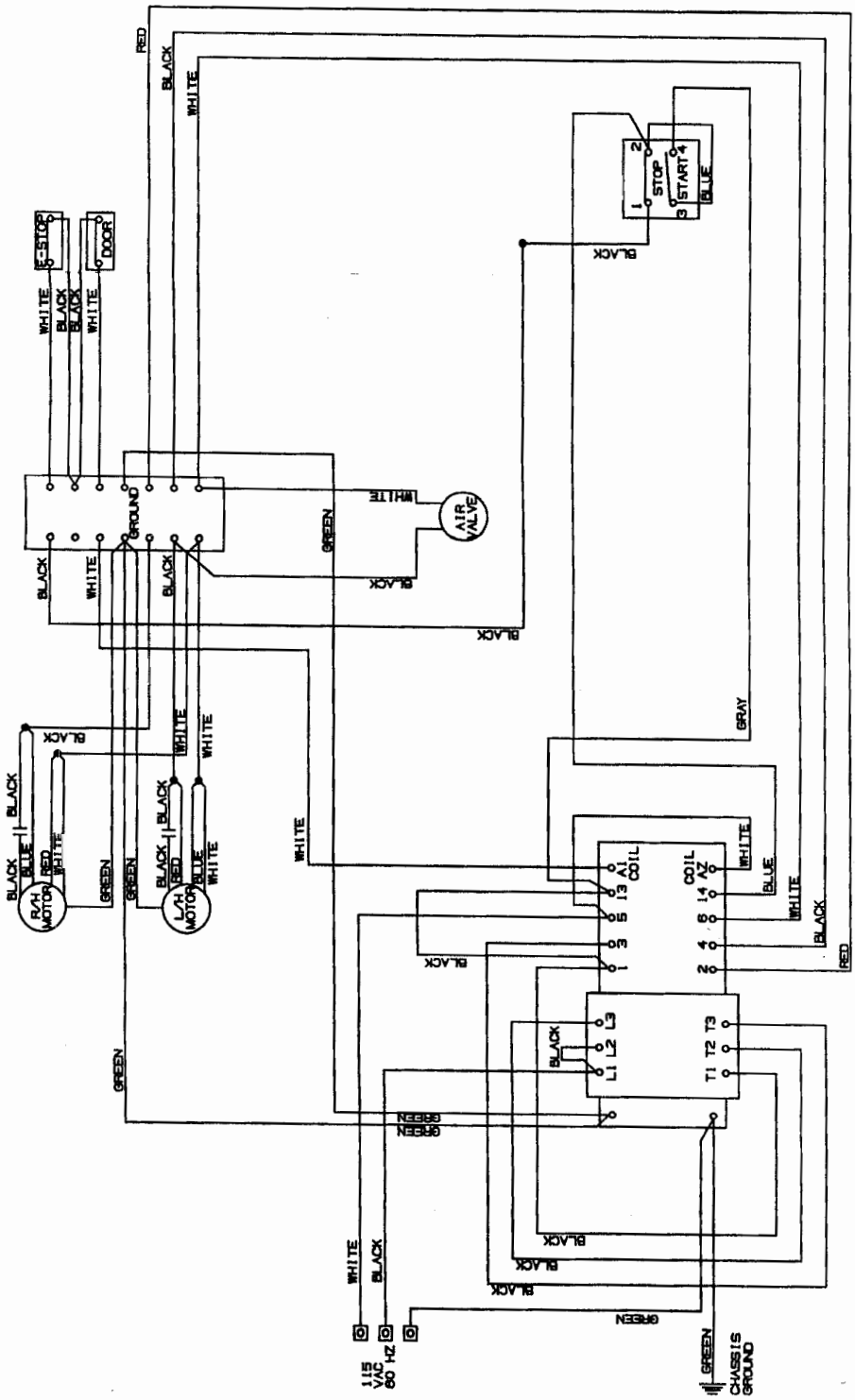

Figure 6-1 – Electrical Diagram (800r, 800r3)

⚠ WARNING – Turn off and disconnect air and electrical supplies before servicing pneumatic components. High pressure air can cause severe injury.

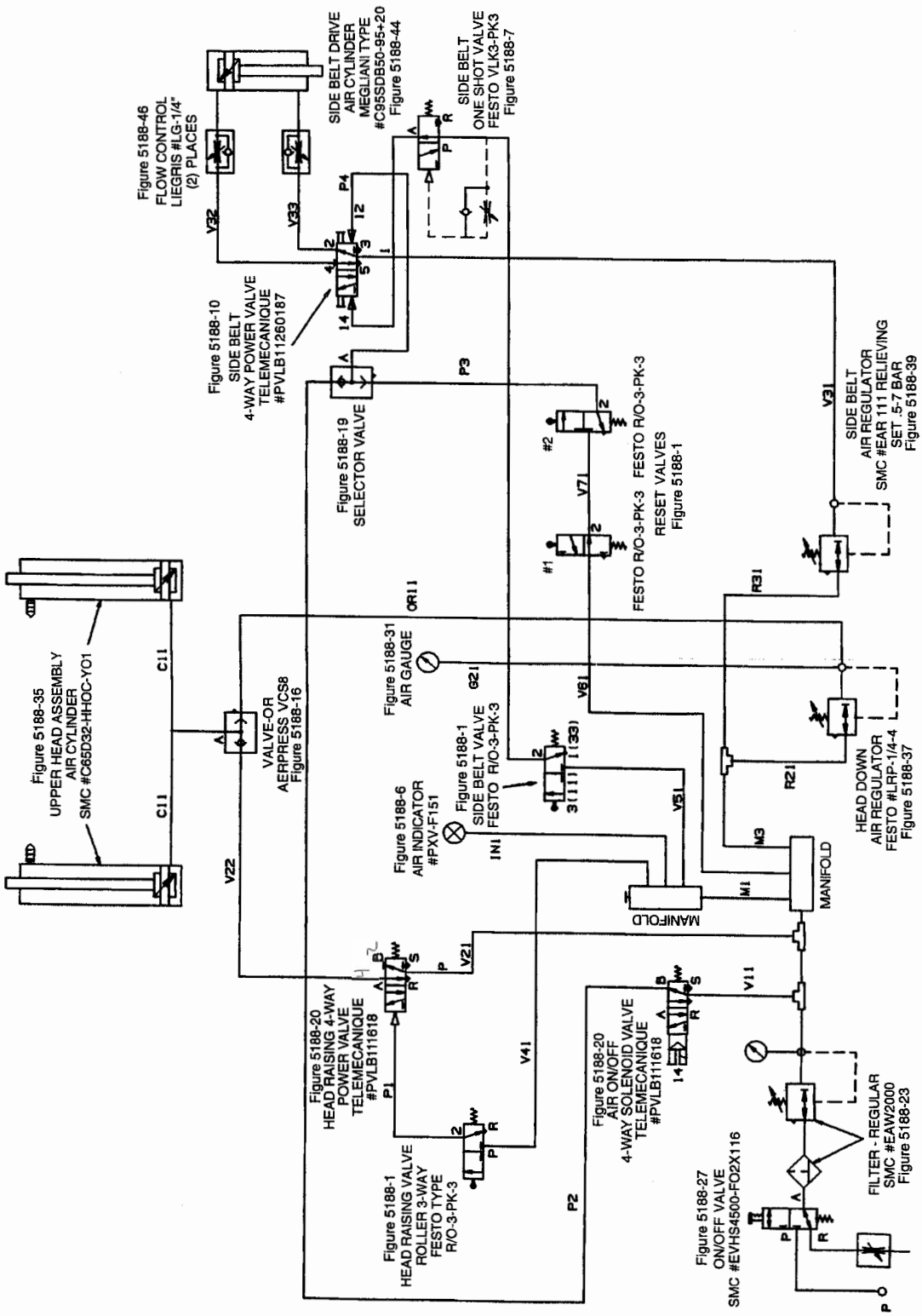

Figure 6-2 – Pneumatic Diagram (800r3)

Parts and Service Information

Spare Parts

The following parts periodically require replacement due to normal wear. They should be ordered immediately and kept on hand to keep the case sealer in production.

Qty.	Section/Ref. No.	Part Number	Description
1	II/2949-15	78-8057-6181-0	Roller – Applying
1	II/2950-5, 2955-5	78-8057-6180-2	Roller – Buffing
1	II/2950-10	78-8070-1274-1	* Spring – Upper Extension (Silver)
1	II/2952-2	78-8028-7899-7	* Blade – 89 mm/3.5 Inch
1	II/2952-6	78-8070-1390-5	Spring – Torsion
2	II/2952-12	78-8052-6602-6	* Spring – Cutter
1	II/2955-10	78-8070-1273-3	* Spring – Lower Extension (Black)
4	I/4894-42	78-8094-6447-8	Belt – Drive

* **Note** – These spare parts are supplied with the tool kit that comes with your machine and should also be ordered separately as used, to keep the case sealer in production.

Labels

In the event that any labels are damaged or destroyed, **they must be replaced to ensure operator safety.** For safety and information replacement labels, see Parts Illustration/Lists, Section I, pages 64-65.

Tool Kit

A tool kit, P/N 78-8098-8868-4, packaged separately and included with your machine, contains the necessary wrenches for use with the metric fasteners on the case sealer. The threading tool, part number 78-8076-4726-4, contained in the kit is available as a stock replacement item and can be ordered separately.

Parts Ordering/Service

Refer to the first page of this instruction manual for parts ordering or service information.

Options/Accessories

For additional information on the options/accessories listed below, contact your 3M Representative.

Part Number	Option/Accessory
78-8095-4862-7	Infeed/Exit Conveyor
78-8095-4854-4	2 Inch Tape Edge Fold Attachment (Upper Head)
78-8095-4855-1	2 Inch Tape Edge Fold Attachment (Lower Head)
78-8079-5560-0	Tape Application Sensor Kit

Replacement Parts – Illustrations and Parts Lists

800r3 Random Case Sealer, Type 19500
With AccuGlide™ II STD 3 Inch Taping Heads

1. Refer to first illustration, **Frame Assemblies,** for the **figure number** that identifies a specific portion of the machine.

2. Refer to the **figure or figures** to determine the **individual parts** required and the **parts reference number.**

3. The **replacement parts list,** that follows each illustration, includes the **part number** and **part description** for the parts in that illustration.

> **Note** – The complete description has been included for **standard fasteners** and **some commercially available components.** This has been done to allow obtaining these standard parts locally, should the customer elect to do so.

4. Order parts by part number, part description and quantity required. Also include machine name, number and type.

5. Refer to first page of this instruction manual for parts ordering address and/or phone/fax number.

> **IMPORTANT – Not all the parts listed are normally stocked items. Some parts or assemblies shown are available only on a special order basis. Contact 3M/Tape Dispenser Parts to confirm item availability.**

THIS PAGE IS BLANK

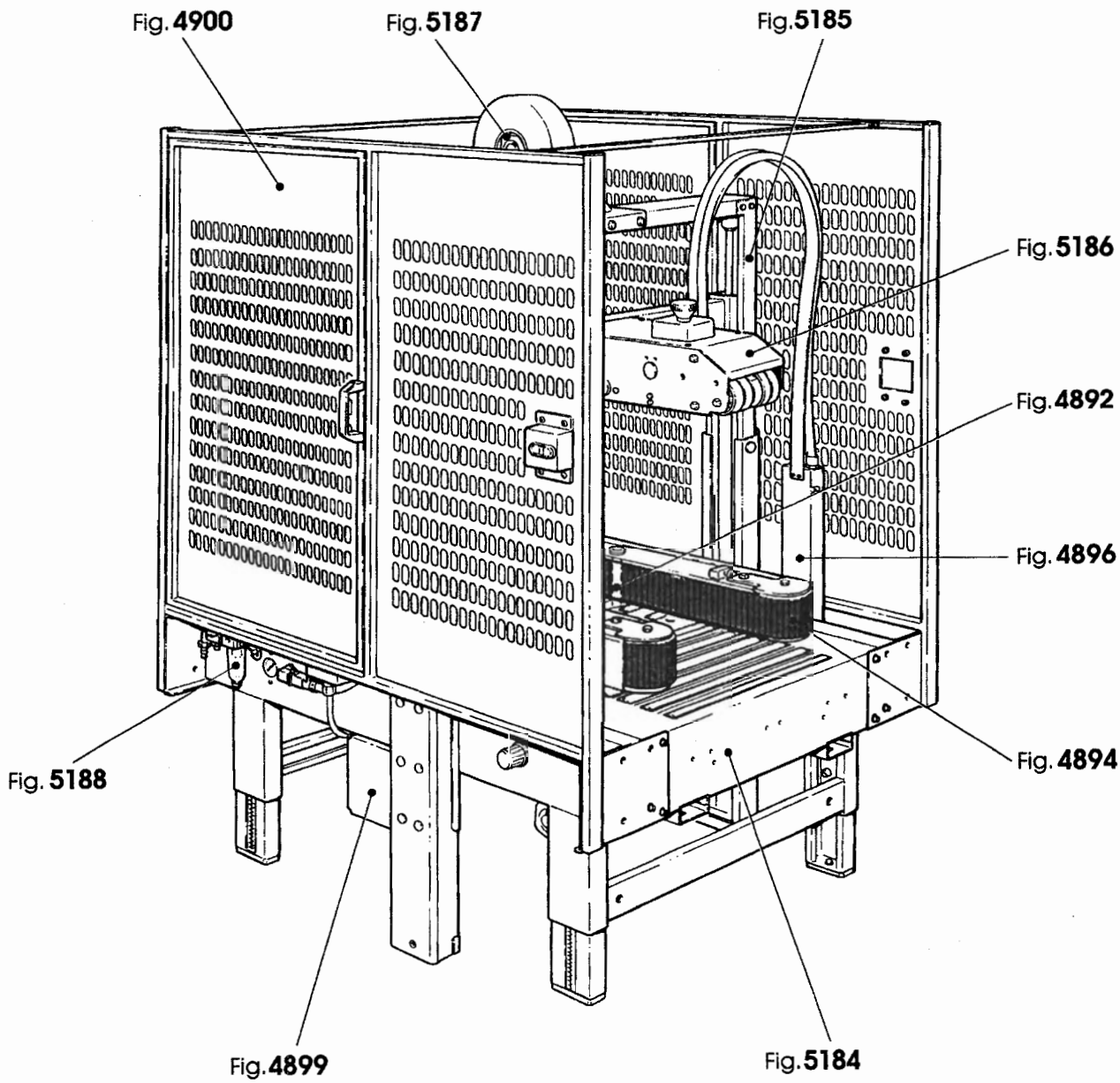
Fig. 4900
Fig. 5187
Fig. 5185
Fig. 5186
Fig. 4892
Fig. 4896
Fig. 4894
Fig. 5188
Fig. 4899
Fig. 5184

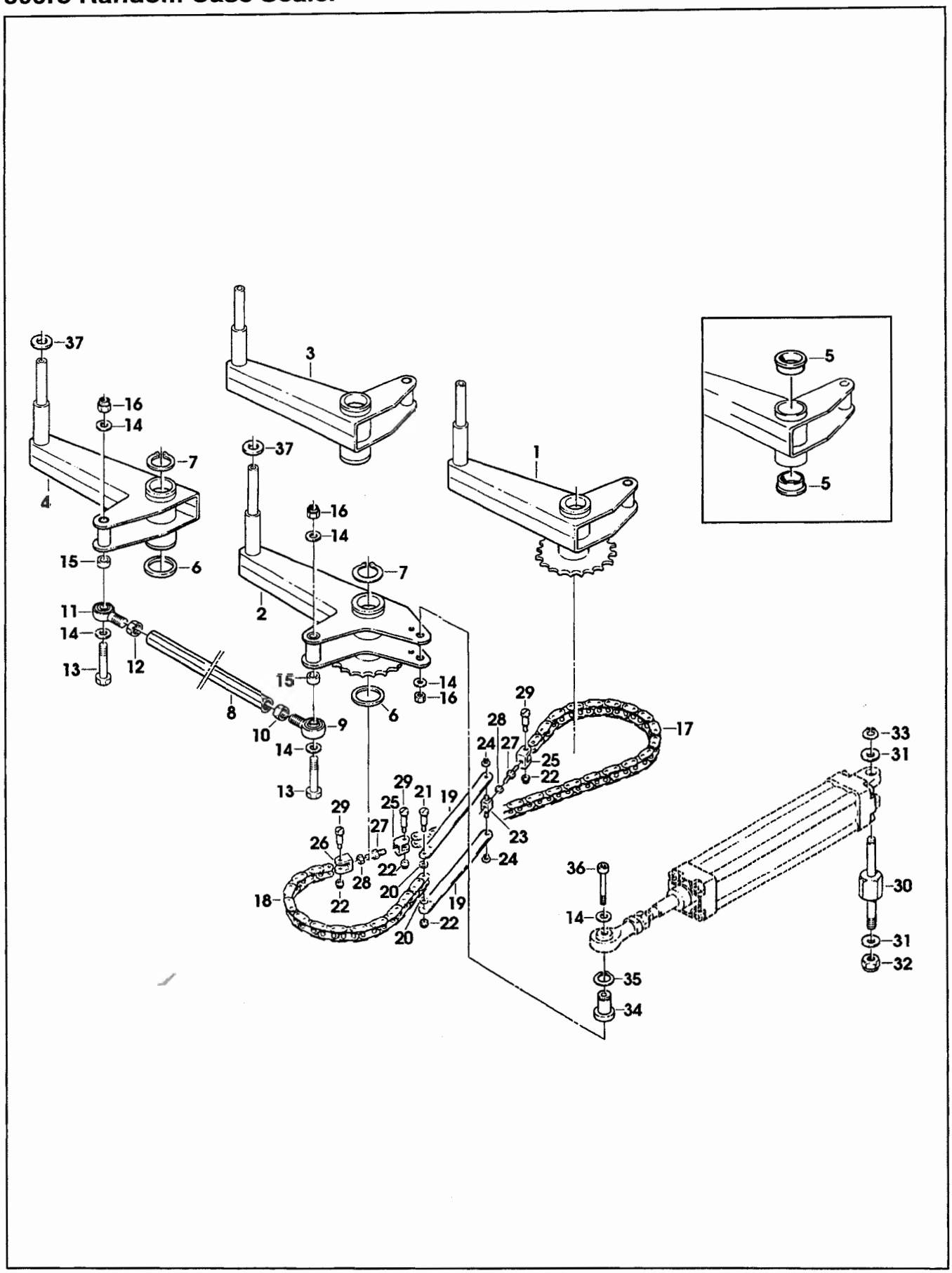
37
16
14
7
4
15
6
11
14
13
12
8
10
9
14
13
3
37
16
14
7
2
15
14
16
6
1
5
5
29
28
24
27
25
22
17
33
31
29
21
19
25
27
26
28
22
20
18
22
19
22
20
23
24
36
14
35
34
30
31
32

Figure 4892

Figure 4892

Ref. No.	3M Part No.	Description
4892-1	78-8076-4787-6	Arm Assembly – Front, Right
4892-2	78-8076-5061-5	Arm Assembly – Front, Left
4892-3	78-8076-5062-3	Arm Assembly – Rear Right
4892-4	78-8076-5063-1	Arm Assembly – Rear, Left
4892-5	78-8076-4791-8	Bushing
4892-6	78-8060-7534-3	Washer
4892-7	78-8060-7521-0	Lock Ring
4892-8	78-8094-6407-2	Rod
4892-9	78-8076-4793-4	Ball Joint – KA 10 D
4892-10	78-8060-7525-1	Nut – Right Flat, M10
4892-11	78-8076-4794-2	Ball Joint – KAL 10 D
4892-12	78-8060-7546-7	Nut – Left Flat, M10
4892-13	78-8094-6488-2	Screw – Hex Hd, M10 x 80
4892-14	78-8052-6566-3	Washer– Friction
4892-15	78-8076-4795-9	Spacer
4892-16	26-1003-6918-5	Nut – Plastic Insert, Hex Flange, M10
4892-17	78-8060-7518-6	Chain – 3/8 Inch, 60 Pitch Long
4892-18	78-8054-8777-0	Chain – 3/8 Inch Pitch, 41 Links Long
4892-19	78-8054-8787-9	Chain Link
4892-20	78-8054-8783-8	Washer – Special
4892-21	78-8060-7519-4	Screw – M3 x 25
4892-22	78-8059-5517-2	Nut – Self-Locking, M3
4892-23	78-8054-8784-6	Block – Chain
4892-24	78-8056-3945-3	E-Ring – M4
4892-25	78-8054-8786-1	Chain Connector
4892-26	78-8054-8788-7	Chain Connector
4892-27	78-8054-8785-3	Rod – Threaded Right/Left
4892-28	78-8010-7418-4	Nut – Hex, M6
4892-29	78-8060-7520-2	Screw - M3 x 20
4892-30	78-8060-7531-9	Stud – Cylinder
4892-31	78-8017-9059-9	Washer – Flat For M12 Screw
4892-32	78-8060-7532-7	Nut – Self-Locking
4892-33	78-8056-3965-1	E-Ring – M8
4892-34	78-8060-7538-4	Bushing – Cylinder
4892-35	78-8060-7533-5	Lock-Ring
4892-36	78-8060-7535-0	Screw – Soc Hd, Hex Soc
4892-37	78-8060-7541-8	Washer

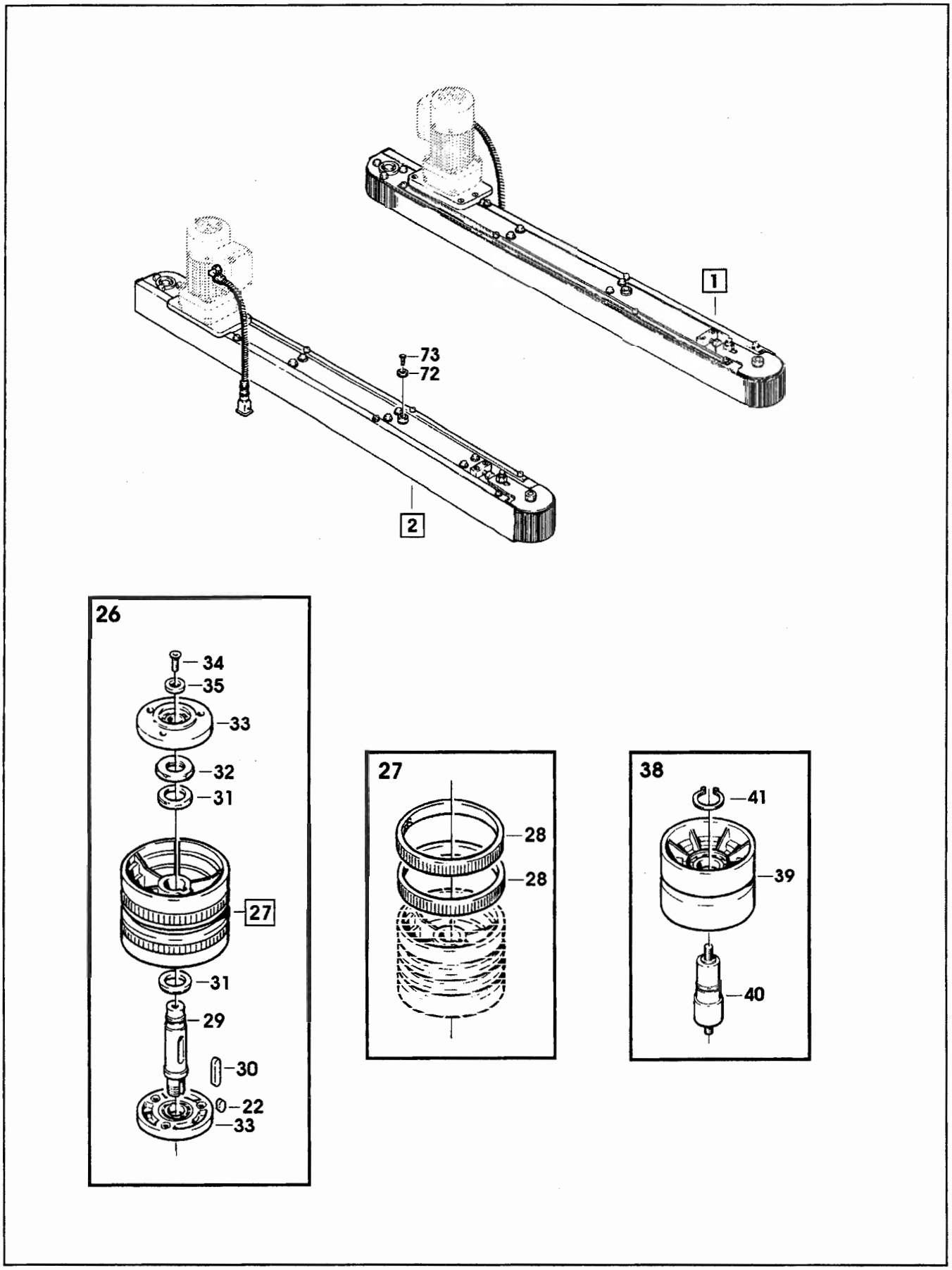

Figure 4894/1 of 2

Figure 4894 (page 1 of 2)

Ref. No.	3M Part No.	Description
4894-1	78-8094-6419-7	Side Drive – R/H, W/O Motor
4894-2	78-8094-6405-6	Side Drive – L/H, W/O Motor
4894-3	78-8094-6420-5	Guide – Lower, R/H
4894-4	78-8094-6421-3	Guide – Lower, L/H
4894-5	78-8094-6422-1	Guide – Upper, R/H
4894-6	78-8094-6423-9	Guide – Upper, L/H
4894-7	78-8091-0500-6	Bushing – Side Drive
4894-8	78-8060-7995-6	Pin – Roller
4894-9	78-8060-7996-4	Roller
4894-10	78-8094-6424-7	Plate – Lower, R/H
4894-11	78-8094-6425-4	Plate – Lower, L/H
4894-12	78-8094-6426-2	Plate – Upper, R/H
4894-13	78-8094-6427-0	Plate – Upper, L/H
4894-14	78-8076-5255-3	Screw – Phillips Dr, M4 x 12
4894-15	78-8005-5740-3	Washer – Plain, 4 MM
4894-16	78-8076-4855-1	Washer – Special, /4.5-9X1.5
4894-17	78-8054-8910-7	Spacer – Hexagonal
4894-18	26-1003-5829-5	Screw – Hex Hd, M6 x 12
4894-19	26-1000-0010-3	Washer – Flat, M6
4894-20	78-8076-5439-3	Flange Assembly
4894-21	78-8091-0757-2	Extension – Gearmotor
4894-22	78-8046-8135-7	Key – 5 x 5, 12MM
4894-23	78-8091-0758-0	Sprocket – 3/8 Inch, Z=14
4894-24	78-8057-5834-5	Tab Washer
4894-25	78-8057-5835-2	Centering Washer
4894-26	78-8076-4862-7	Pulley – Drive
4894-27	78-8076-5105-0	Pulley Assembly – Drive
4894-28	78-8052-6713-1	Ring – Polyurethane
4894-29	78-8054-8878-6	Shaft – Pulley Keyed
4894-30	78-8057-5739-6	Key – M5 x 5 x 30MM
4894-31	78-8054-8879-4	Washer – /20, 5MM
4894-32	78-8017-9096-1	Nut – Special, M18 x 1
4894-33	78-8076-5442-7	Flange Assembly
4894-34	26-0001-5862-1	Screw – Flat Hd Soc, M5 x 12
4894-35	78-8054-8877-8	Washer – 5,5/20X4
4894-36	78-8090-0759-0	Sprocket – 3/8 Inch, Z=23
4894-37	78-8076-4933-6	Chain – 3/8 Inch Pitch, 52 Pitch

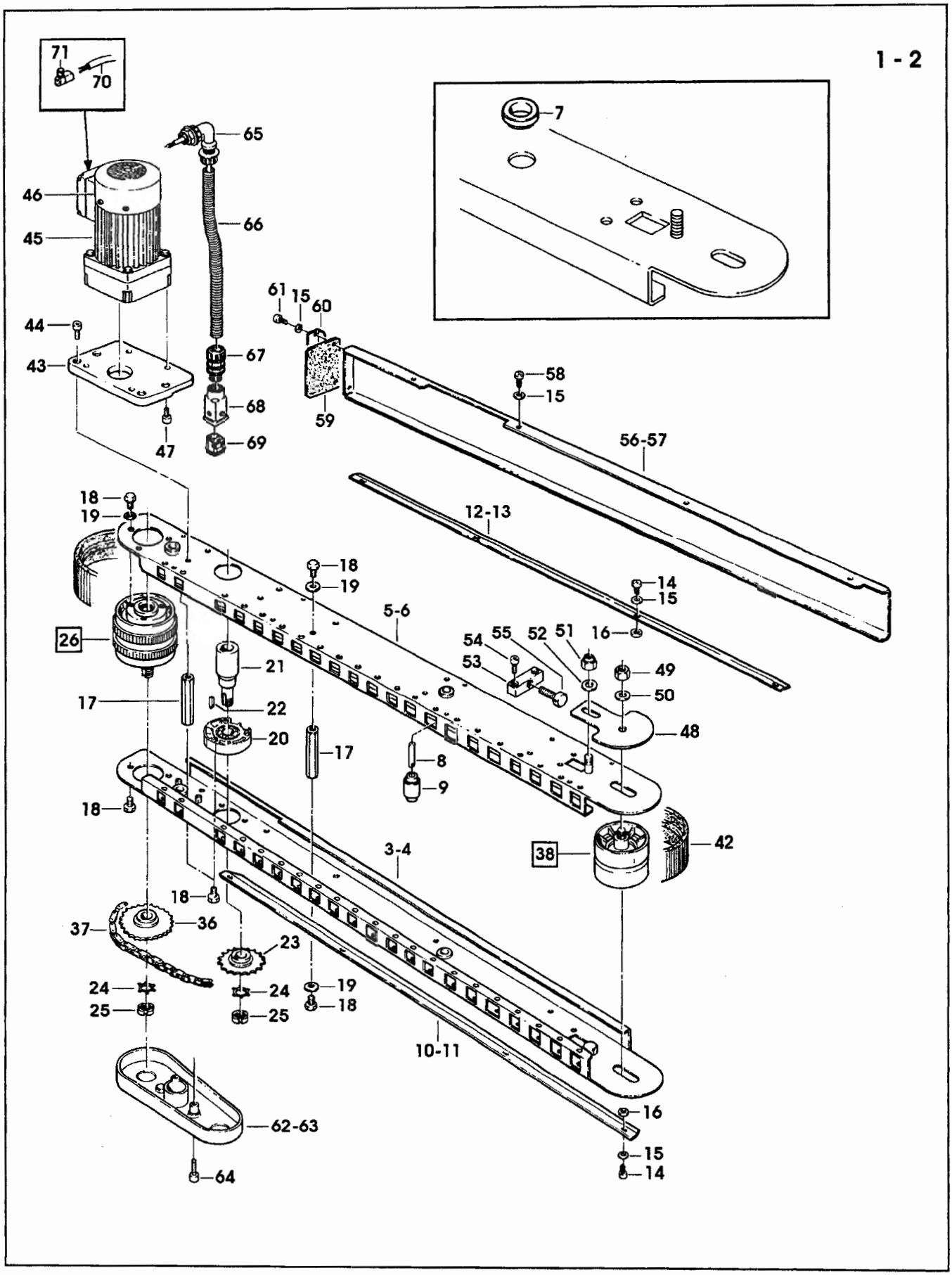

Figure 4894/2 of 2

Figure 4894 (page 2 of 2)

Ref. No.	3M Part No.	Description
4894-38	78-8060-8014-5	Idler Roller Assembly
4894-39	78-8052-6710-7	Roller – Idler
4894-40	78-8054-8913-1	Shaft – Roller
4894-41	12-7997-0272-0	E-Ring – M25
4894-42	78-8094-6447-8	Belt – Drive
4894-43	78-8094-6109-4	Support – Gearmotor
4894-44	78-8010-7210-5	Screw – Soc Hd, Hex Soc, M6 x 20
4894-45	78-8070-1522-3	Gearmotor – 115V, 60HZ
4894-46	78-8076-4515-1	Capacitor – 115V Gearmotor
4894-47	78-8070-1523-1	Screw – 1/4-28X1/2 SHCS
4894-48	78-8091-0761-4	Plate – Belt Tensioning
4894-49	26-1000-1347-8	Nut – Hex, M8
4894-50	78-8017-9318-9	Washer – Plain, 8MM
4894-51	26-1003-6918-5	Nut – Plastic Insert, Hex, M10
4894-52	78-8052-6566-3	Washer – Friction
4894-53	78-8054-8903-2	Block – Belt
4894-54	78-8010-7210-5	Screw – Soc Hd, Hex Soc, M6 x 20
4894-55	78-8054-8904-0	Screw – Belt Adjustment
4894-56	78-8094-6428-8	Cover – R/H
4894-57	78-8094-6429-6	Cover – L/H
4894-58	26-1002-5753-9	Screw – Self-Tapping
4894-59	78-8054-8897-6	Guard – Belt
4894-60	78-8076-4870-0	Plate
4894-61	26-1002-4955-1	Screw – Self-Tap, 8PX13
4894-62	78-8091-0764-8	Cover – Chain, Right
4894-63	78-8091-0765-5	Cover – Chain, Left
4894-64	78-8010-7165-1	Screw – Flat Hd Soc, M5 x 25
4894-65	78-8076-4606-8	Union – Elbow, 3/8 Inch
4894-66	78-8076-4871-8	Sleeving – /12, 600MM
4894-67	78-8060-7626-7	Connector – PG 11/12
4894-68	78-8060-7877-6	Plug – Housing, Vertical
4894-69	78-8060-7875-0	Plug – Male
4894-70	78-8060-8053-3	Wire – 3-Pole, 5 Meters Length
4894-71	78-8076-4602-7	Terminal
4894-72	78-8054-8577-4	Washer – Special
4894-73	26-1001-9843-6	Screw – Flat, Soc Hd, M6 x 16

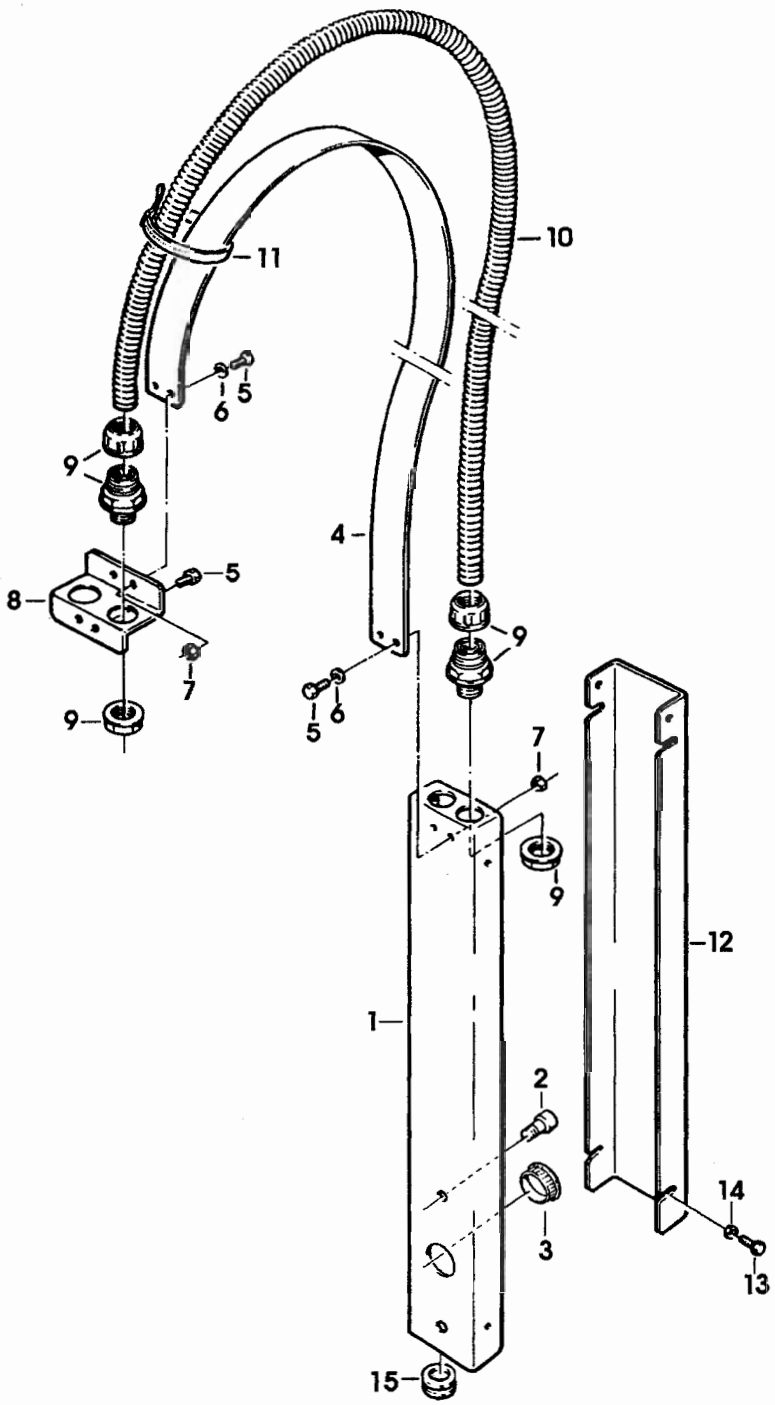

Figure 4896

Figure 4896

Ref. No.	3M Part No.	Description
4896-1	78-8091-0600-4	Housing – Wire
4896-2	26-1003-7963-0	Screw – Soc Hd, M8 x 16
4896-3	78-8094-6489-0	Snap Bushing – SB 1250-15
4896-4	78-8076-4636-5	Strap – Wire
4896-5	78-8010-7163-6	Screw – Hex Hd, M5 x 10
4896-6	78-8005-5741-1	Washer – Plain, M5
4896-7	78-8010-7417-6	Nut – Hex, M5
4896-8	78-8076-4873-4	Plate – Strap
4896-9	78-8076-4638-1	Union PG13.5 – Sleeve / 14
4896-10	78-8094-6445-2	Sleeve – /14, 980 MM
4896-11	78-8060-8029-3	Clamp – 140 x 3,5
4896-12	78-8076-5118-3	Cover – Channel
4896-13	26-1003-5810-5	Screw – Hex Hd, M4 x 8
4896-14	78-8017-9018-5	Washer – Plain, M4 SPEC.
4896-15	78-8060-7785-1	Fairlead – /22

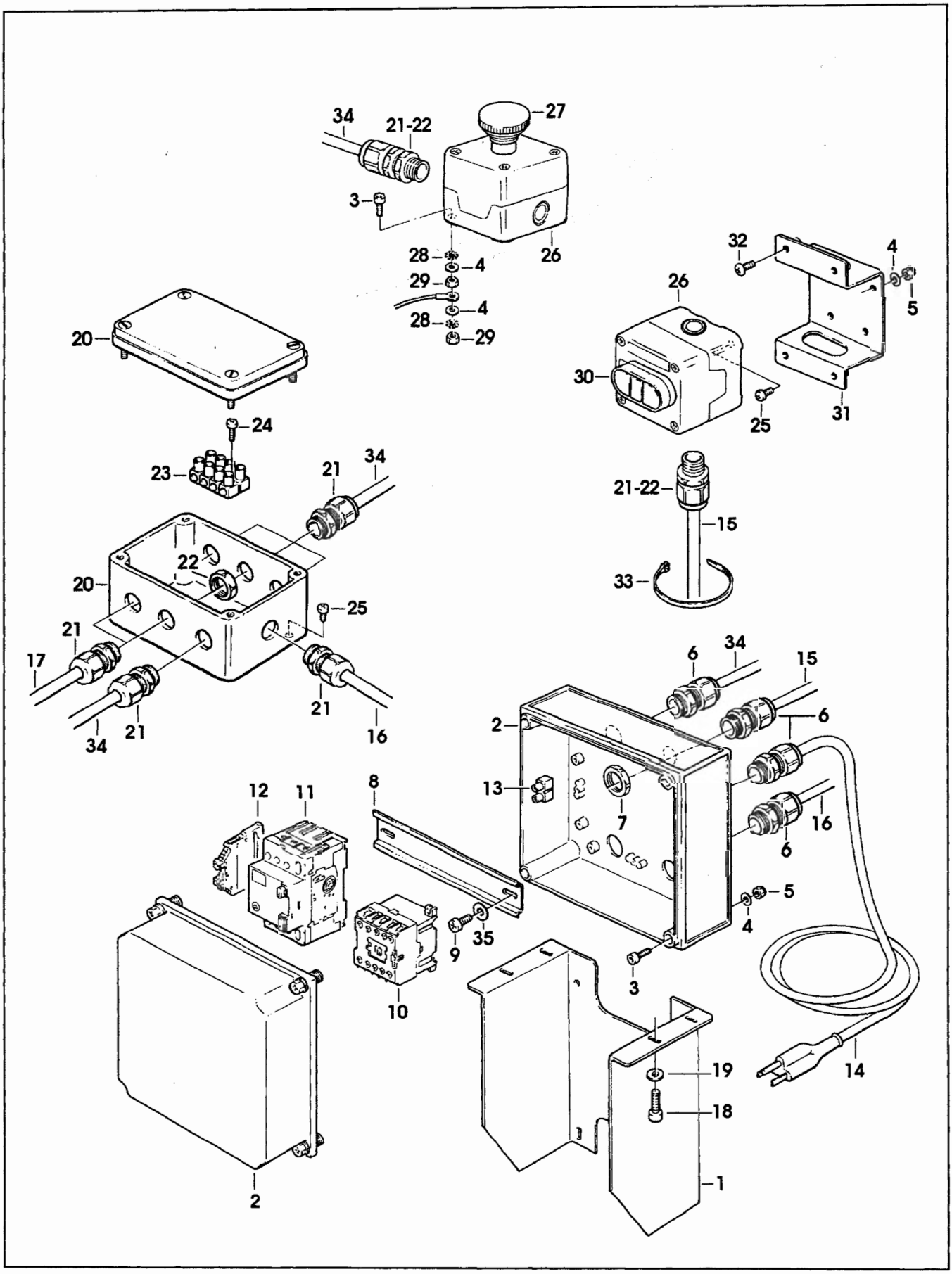
34
21-22
27
3
28
4
29
26
32
4
5
26
30
25
31
20
24
23
21
34
21-22
15
33
22
20
25
21
17
34
21
21
16
6
34
15
2
6
13
7
16
6
12
11
8
5
4
35
9
3
10
19
18
14
1
2

Figure 4899

Figure 4899

Ref. No.	3M Part No.	Description
4899-1	78-8094-6379-3	Support Box
4899-2	~~78-8094-6380-1~~	Box 78-8113-6759-4
4899-3	78-8094-6381-9	Screw – Soc Hd, Hex Hd, M4 x 15
4899-4	78-8005-5740-3	Washer – Plain, 4 MM
4899-5	26-1003-6914-4	Nut – Plastic Insert, M4
4899-6	78-8076-4715-7	Cord Grip
4899-7	78-8076-5211-6	Nut
4899-8	78-8094-6382-7	Guide – Mounting
4899-9	78-8028-8208-0	Screw – 6PX9,5
4899-10	78-8094-6383-5	Contactor – CA4-5-10, 110V, 60HZ
4899-11	78-8076-5378-3	Switch – Thermal, KTA-3-25
4899-12	78-8094-6384-3	Clamp – VGPE 4/6
4899-13	78-8076-4882-5	Terminal Board
4899-14	26-1009-8724-2	Power Cord W/Plug – Type SO
4899-15	78-8076-5176-1	Cable – FROR, 07 3XO.75, 5M
4899-16	78-8094-6223-3	Cable – SJTO, 16/4
4899-17	78-8060-8053-3	Wire – 3-Pole, 5 Meters Length
4899-18	78-8010-7210-5	Screw – Soc Hd, Hex Soc, M6 x 20
4899-19	26-1000-0010-3	Washer – Flat, M6
4899-20	78-8076-4881-7	Pull Box
4899-21	78-8076-4532-6	Union
4899-22	78-8076-4645-6	Lock Nut – GMP11
4899-23	78-8076-4968-2	Terminal
4899-24	78-8091-0434-8	Screw – Self-Tapping, 4.2X19
4899-25	78-8017-9257-9	Screw – Phillip Hd, M4 x 10
4899-26	78-8076-5194-4	Box – E-Stop 78-8104-6528-0
4899-27	78-8094-6385-0	E-Stop – 800EP-MTS643LX01
4899-28	78-8076-4716-5	Star Washer – M4
4899-29	78-8010-7416-8	Nut – Hex, M4
4899-30	78-8094-6386-8	Switch – On/Off, DM3N-C-01/10
4899-31	78-8094-6387-6	Support – Switch
4899-32	78-8060-8087-1	Screw – M5 x 10
4899-33	78-8060-8029-3	Clamp – 140X3,5
4899-34	78-8076-5273-6	Cable – 3X1, 5M
4899-35	78-8017-9018-5	Washer – Plain, M4, SPEC.

800r3 Random Case Sealer

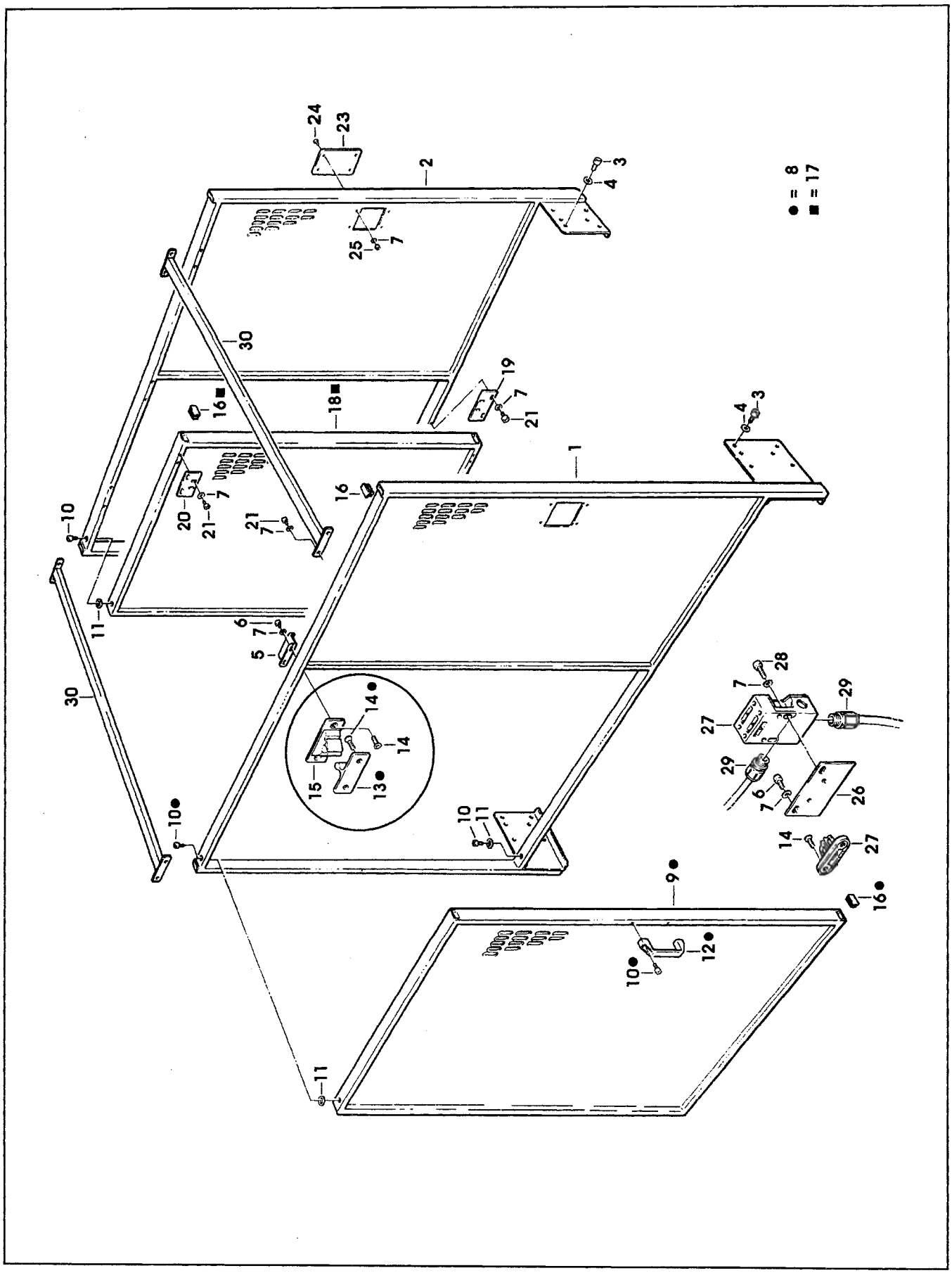

Figure 4900

Figure 4900

Ref. No.	3M Part No.	Description
4900-1	78-8094-6459-3	Guard – L/H
4900-2	78-8094-6460-1	Guard – R/H
4900-3	26-1003-7964-8	Screw – Soc Hd, Hex Hd, Soc Dr, M8 x 20
4900-4	78-8017-9318-9	Washer – Plain, 8 MM
4900-5	78-8094-6461-9	Bracket
4900-6	78-8032-0382-3	Screw – Soc Hex Hd, M5 x 16
4900-7	78-8005-5741-1	Washer – Plain, M5
4900-8	78-8094-6462-7	Door Assembly – L/H
4900-9	78-8094-6463-5	Door – L/H
4900-10	26-1003-7957-2	Screw – Soc Hd, Hex Hd, M6 x 16
4900-11	78-8094-6464-3	Spacer
4900-12	78-8060-7807-3	Handle
4900-13	78-8076-4931-0	Drawbar – Lock
4900-14	26-0001-5862-1	Screw – Flat Hd Soc , M5 x 12
4900-15	78-8076-4932-8	Lock – Wing
4900-16	78-8094-6195-3	Cap
4900-17	78-8094-6465-0	Door Assembly – R/H
4900-18	78-8094-6466-8	Door – R/H
4900-19	78-8094-6467-6	Plate – Lower
4900-20	78-8094-6468-4	Plate – Upper
4900-21	26-1003-7949-9	Screw – Soc Hd, Hex Soc, M5 x 12
4900-23	78-8094-6470-0	Plate
4900-24	78-8060-8087-1	Screw – M5 x 10
4900-25	78-8010-7417-6	Nut – Hex, M5
4900-26	78-8094-6471-8	Plate – Switch Mounting
4900-27	78-8076-4929-4	Security Switch – AZ15ZVR
4900-28	26-1003-7951-5	Screw – Soc Hd, Hex Soc, M5 x 20
4900-29	78-8076-4532-6	Union
4900-30	78-8094-6469-2	Cross Bar

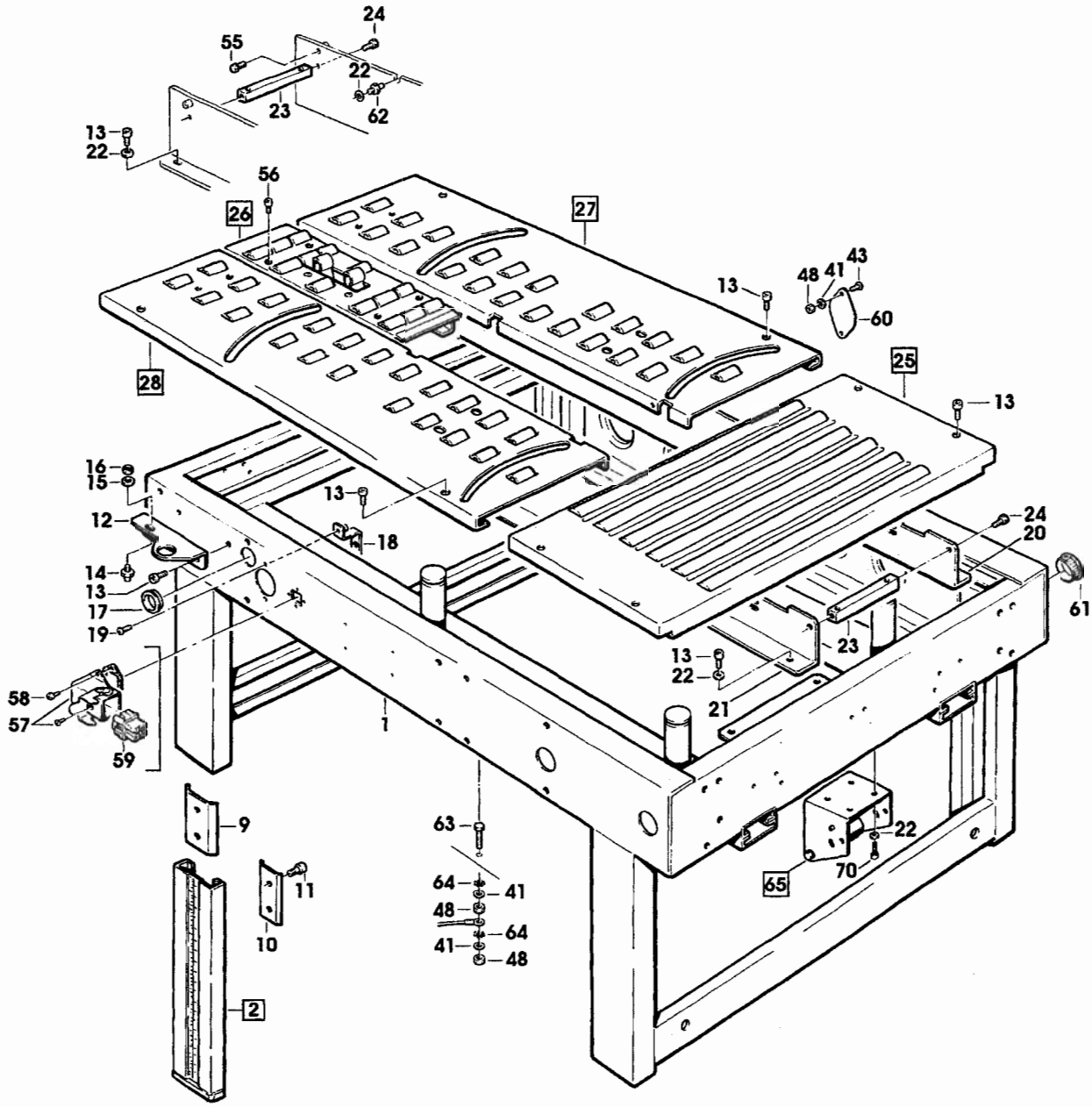

Figure 5184/1 of 2

Figure 5184 (page 1 of 2)

Ref. No.	3M Part No.	Description
5184-1	78-8094-6388-4	Bed Assembly – Conveyor
5184-2	78-8094-6486-6	Leg Assembly – Inner
5184-3	78-8094-6390-0	Leg – Inner
5184-4	78-8060-8480-8	Pad – Foot
5184-5	78-8055-0867-4	Screw – Hex Hd, M8 x 30
5184-6	26-1004-5507-5	Washer – M8
5184-7	78-8017-9313-0	Nut – Self-Locking, M8
5184-8	78-8094-6487-4	Label – Leg
5184-9	78-8052-6677-8	Clamp – Inner
5184-10	78-8052-6676-0	Clamp – Outer
5184-11	26-1003-7963-0	Screw – Soc Hd, M8 x 16
5184-12	78-8094-6392-6	Bracket
5184-13	78-8010-7209-7	Screw – Soc Hd, M6 x 12
5184-14	78-8091-0613-7	Shaft – Valve
5184-15	78-8042-2919-9	Washer – Triple, M6
5184-16	26-1003-6916-9	Nut – Locking Plastic Insert, M6
5184-17	78-8094-6489-0	Snap Bushing – SB 1250-15
5184-18	78-8076-4535-9	Bracket
5184-19	78-8076-4625-8	Screw – Special, M5 x 16
5184-20	78-8094-6393-4	Frame – BTM, R/H
5184-21	78-8094-6394-2	Frame – BTM, L/H
5184-22	26-1000-0010-3	Washer – Flat, M6
5184-23	78-8060-7955-0	Spacer – Center Frame
5184-24	78-8010-7169-3	Screw – Hex Hd, M6 x 12
5184-25	78-8094-6395-9	Conveyor Assembly – Front
5184-26	78-8094-6396-7	Conveyor Assembly – Rear
5184-27	78-8094-6397-5	Conveyor Assembly – R/H
5184-28	78-8094-6398-3	Conveyor Assembly – L/H
5184-29	78-8094-6399-1	Conveyor – Front
5184-30	78-8094-6400-7	Conveyor – Rear
5184-31	78-8094-6401-5	Conveyor – R/H
5184-32	78-8094-6402-3	Conveyor – L/H
5184-33	78-8094-6403-1	Shaft – Roller
5184-34	78-8059-5596-6	Roller
5184-35	78-8052-6694-3	Shaft – /8 x 128
5184-36	78-8060-7693-7	Roller – 32 x 38
5184-37	78-8060-7965-9	Shaft – Hex Hd, /8 x 120
5184-38	78-8054-8857-0	Shaft – 8 x 43 mm

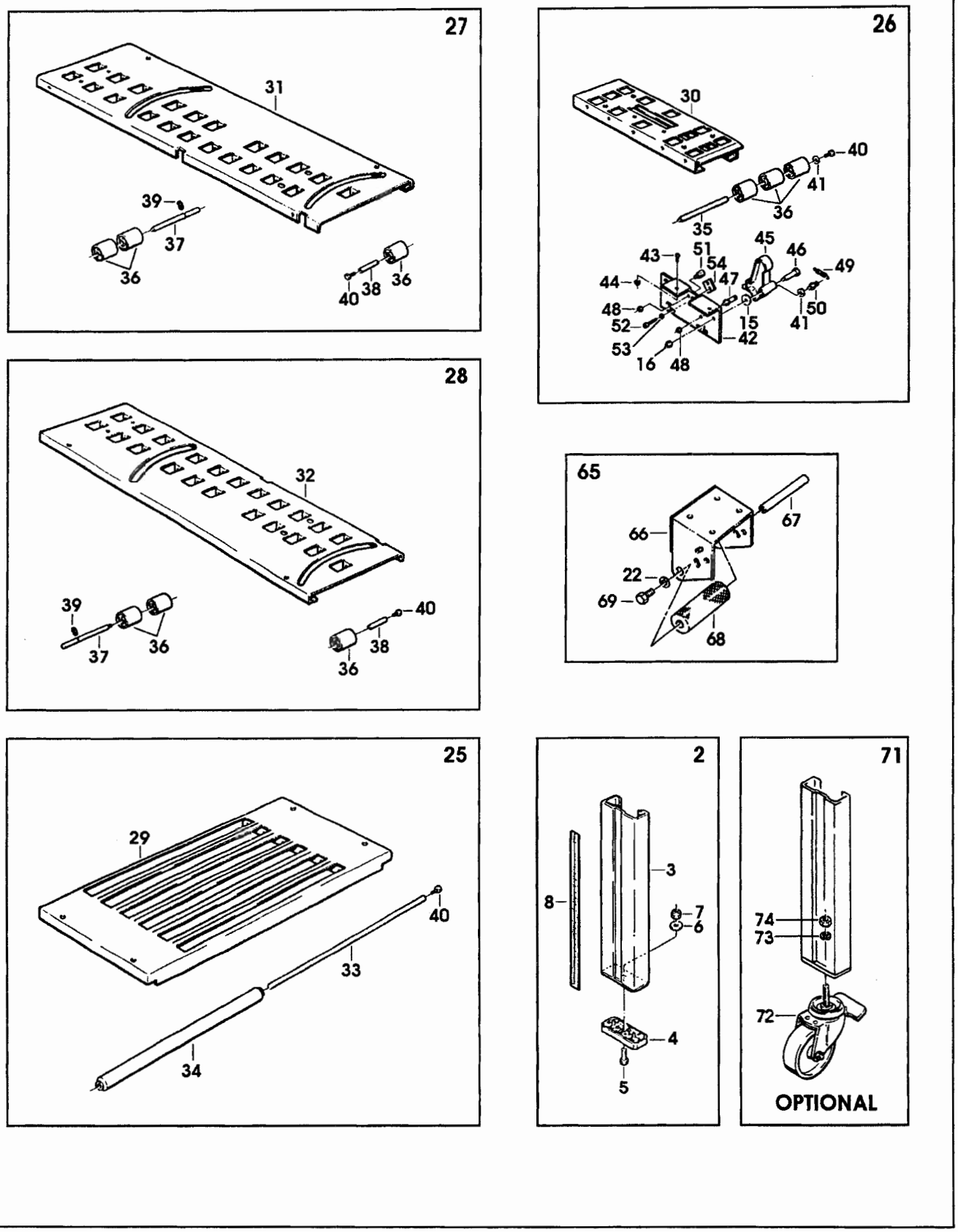

Figure 5184/2 of 2

Figure 5184 (page 2 of 2)

Ref. No.	3M Part No.	Description
5184-39	78-8060-8035-0	E-Ring – 7DIN6799
5184-40	78-8010-7163-6	Screw – Hex Hd, M5 x 10
5184-41	78-8005-5741-1	Washer – Plain, M5
5184-42	78-8060-8086-3	Support – Valve
5184-43	78-8060-8087-1	Washer – Plain, M5
5184-44	26-1005-6859-6	Nut – Self-Locking, M5
5184-45	78-8060-7775-2	Cam – Rear
5184-46	78-8060-8088-9	Shaft – Cam
5184-47	78-8054-8757-2	Pin – Spring Holder
5184-48	78-8010-7417-6	Nut – Hex, M5
5184-49	78-8094-6404-9	Spring
5184-50	78-8060-7777-8	Spring – Tensioner
5184-51	78-8060-8080-6	Guard – Stop
5184-52	26-1003-7946-5	Screw – Soc Hd, M4 x 25
5184-53	78-8017-9018-5	Washer – Plain, SPEC, M4
5184-54	78-8059-5607-1	Plate – Threaded
5184-55	26-1003-5829-5	Screw – Hex Hd, M6 x 12
5184-56	26-1003-7948-1	Screw – Soc Hd, Hex Soc, M5 x 10
5184-57	78-8060-7876-8	Cover Plug – Lateral
5184-58	78-8028-8208-0	Screw – 6PX9,5
5184-59	78-8060-7873-5	Plug – Female
5184-60	78-8094-6305-8	Plate – Gauge
5184-61	78-8094-6177-1	Cap
5184-62	78-8070-1665-0	Stud – Hex, Taping Head
5184-63	78-8060-8488-1	Screw – Hex Hd, M5 x 20
5184-64	78-8046-8217-3	Washer – Special
5184-65	78-8076-5462-5	Support – Tape Drum
5184-66	78-8076-4758-7	Support – Tape Bracket
5184-67	78-8076-4759-5	Shaft – Roller
5184-68	78-8076-5030-0	Roller – Knurled, L=114
5184-69	78-8032-0375-7	Screw – Hex Hd, M6 x 16
5184-70	26-1003-7957-2	Screw – Soc Hd, Hex Hd, M6 x 16
5184-71	78-8098-9076-3	Caster Assembly
5184-72	26-1009-9096-4	Caster – Dual Locking
5184-73	26-1009-9094-9	Washer – Spring, Helical, M12
5184-74	26-1009-9095-6	Nut – M12

800r3 Random Case Sealer

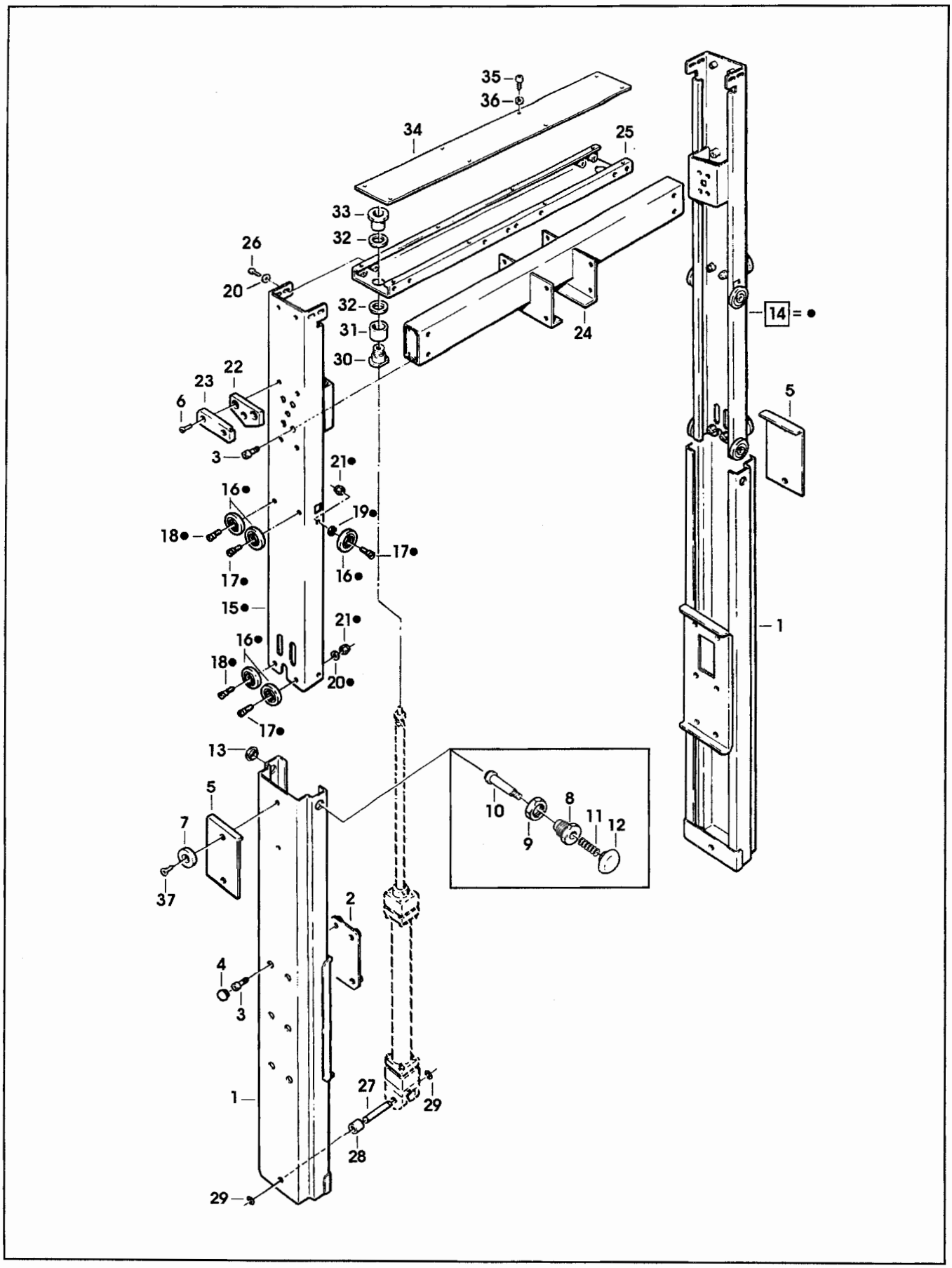

Figure 5185

Figure 5185

Ref. No.	3M Part No.	Description
5185-1	78-8094-6408-0	Column Assembly – Outer
5185-2	78-8076-5474-0	Plate Assembly – Column Mount
5185-3	26-1003-7964-8	Screw – Soc Hd, Hex Soc Dr, M8 x 20
5185-4	78-8054-8821-6	End – Cap
5185-5	78-8091-0621-0	Plate – Outer Column
5185-6	78-8060-7918-8	Screw – Flat, Soc Hd, M6 x 25
5185-7	78-8054-8577-4	Washer – Special
5185-8	78-8091-0615-2	Bushing – Stop
5185-9	78-8017-9169-6	Nut – M18 x 1
5185-10	78-8076-4544-1	Stud – Height Stop
5185-11	78-8076-4545-8	Spring
5185-12	78-8076-4546-6	Knob
5185-13	78-8076-4547-4	Cap – /18
5185-14	78-8094-6410-6	Column Assembly – Inner
5185-15	78-8094-6411-4	Column – Inner
5185-16	78-8054-8617-8	Bearing – Special
5185-17	78-8017-9106-8	Screw – Bearing Shoulder
5185-18	78-8054-8589-9	Screw – Special
5185-19	78-8054-8576-6	Spacer
5185-20	26-1000-0010-3	Washer – Flat, M6
5185-21	26-1003-6916-9	Nut – Locking Plastic Insert, M6
5185-22	78-8060-7916-2	Bumper
5185-23	78-8091-0617-8	Plate – Support Bumper
5185-24	78-8100-0764-7	Bar
5185-25	78-8100-0765-4	Cross Member
5185-26	78-8032-0375-7	Screw – Hex Hd, M6 x 16
5185-27	78-8054-8966-9	Pin – Air Cylinder Clevis
5185-28	78-8054-8828-1	Spacer – 10,5/16X14, 5MM
5185-29	78-8060-8035-0	E-Ring – 7DIN6799
5185-30	78-8054-8824-0	Rod End
5185-31	78-8094-6416-3	Spacer
5185-32	78-8054-8823-2	Washer – Bumper
5185-33	78-8094-6417-1	Ring Nut
5185-34	78-8094-6418-9	Cover
5185-35	78-8076-5255-3	Screw – Phillips Hd, M4 x 12
5185-36	78-8005-5740-3	Washer – Plain, 4MM
5185-37	26-1001-9843-6	Screw – Flat, Soc Hd, M6 x 16

800r3 Random Case Sealer

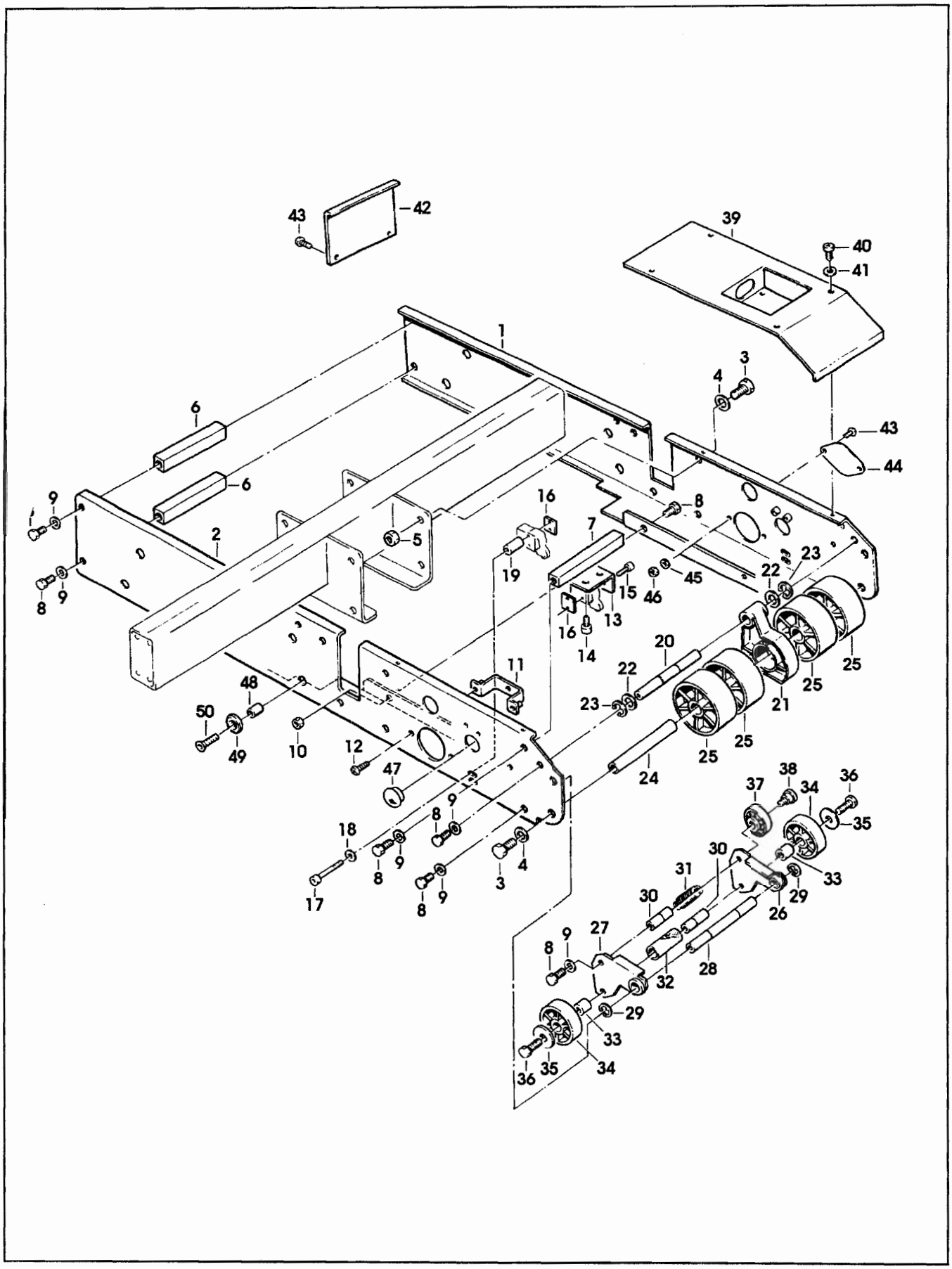

Figure 5186

Figure 5186

Ref. No.	3M Part No.	Description
5186-1	78-8100-0766-2	Frame – Upper, R/H
5186-2	78-8100-0767-0	Frame – Upper, L/H
5186-3	26-1003-5841-0	Screw – M8 x 16
5186-4	78-8017-9318-9	Washer – Plain, 8MM
5186-5	26-1000-1347-8	Nut – Hex, M8
5186-6	78-8094-6247-2	Spacer
5186-7	78-8100-0768-8	Spacer
5186-8	78-8010-7169-3	Screw – Hex Hd, M6 x 12
5186-9	26-1000-0010-3	Washer – Flat, M6
5186-10	78-8010-7418-4	Nut – Hex, M6
5186-11	78-8076-4535-9	Bracket
5186-12	78-8076-4625-8	Screw – Special, M5 x 16
5186-13	78-8054-8832-3	Support – Valve
5186-14	26-1003-7949-9	Screw – Soc Hd, Hex Soc, M5 x 12
5186-15	26-1003-7946-5	Screw – Soc Hd, M4 x 25
5186-16	78-8059-5607-1	Plate – Threaded
5186-17	78-8094-6434-6	Screw – Soc Hd, Hex Hd, M4 x 50
5186-18	78-8017-9018-5	Washer – Plain, M4 SPEC.
5186-19	78-8094-6435-3	Spacer
5186-20	78-8100-0769-6	Shaft – Lever
5186-21	78-8076-4657-1	Link – Actuator, Valve
5186-22	78-8052-6566-3	Washer – Friction
5186-23	78-8016-5855-6	E-Ring – 10MM
5186-24	78-8094-6250-6	Shaft – Roller
5186-25	78-8100-0770-4	Roller
5186-26	78-8094-6439-5	Frame – R/H
5186-27	78-8094-6440-3	Frame – L/H
5186-28	78-8094-6254-8	Shaft – 10 X 150
5186-29	78-8060-8035-0	E-Ring – 7DIN6799
5186-30	78-8094-6255-5	Shaft – 10 x 46
5186-31	78-8076-4774-4	Spring
5186-32	78-8094-6256-3	Sleeve
5186-33	78-8094-6258-9	Bushing
5186-34	78-8060-7798-4	Wheel – /50
5186-35	78-8042-2919-9	Washer – Triple, M6
5186-36	26-1003-5832-9	Screw – Hex Hd, M6 x 25
5186-37	78-8054-8617-8	Bearing – Special
5186-38	78-8017-9106-8	Screw – Bearing Shoulder
5186-39	78-8100-0771-2	Cover – Front
5186-40	26-1002-5753-9	Screw – Self-Tapping
5186-41	78-8005-5740-3	Washer – Plain, 4 MM
5186-42	78-8100-0772-0	Cover – Upper, Rear
5186-43	78-8060-8087-1	Screw – M5 x 10
5186-44	78-8094-6259-7	Plate
5186-45	78-8005-5741-1	Washer – Plain, M5
5186-46	78-8010-7417-6	Nut – Hex, M5
5186-47	78-8060-7885-9	End Cap – /25X1,2
5186-48	78-8052-6700-8	Spacer – Taping Head Mtg.
5186-49	78-8076-5477-3	Washer – Taping Head Mtg., 6.5 x 20 x 4
5186-50	78-8060-7918-8	Screw – Flat, Soc Hd, M6 x 25

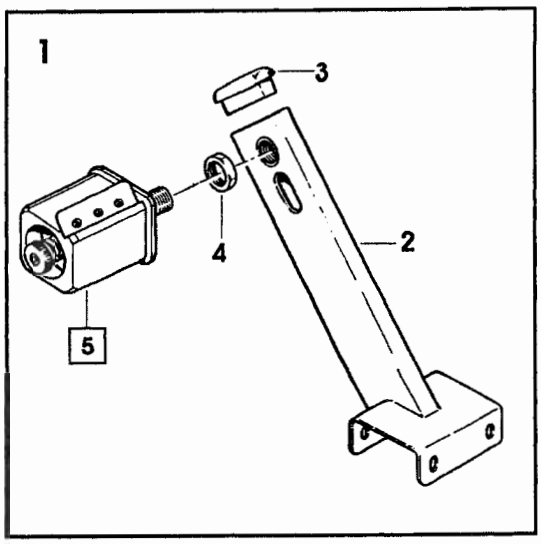

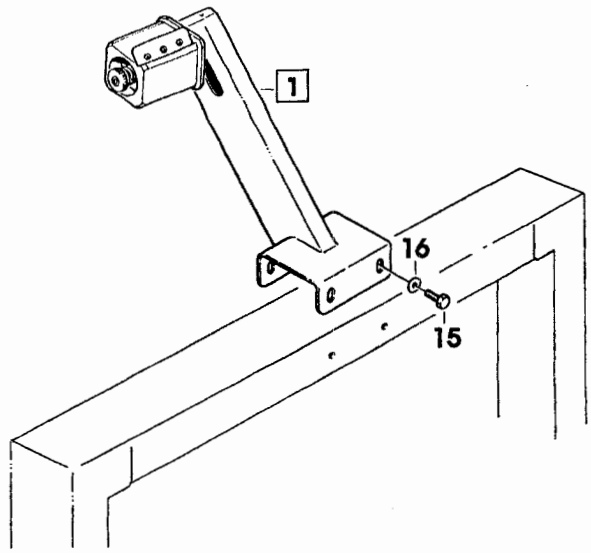

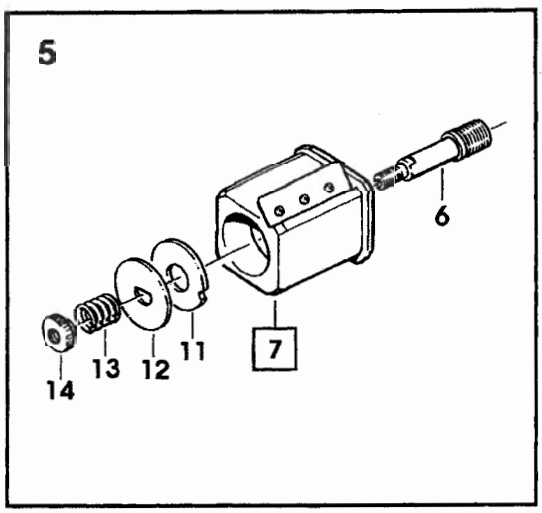

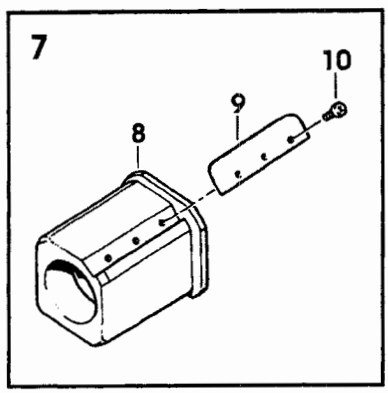

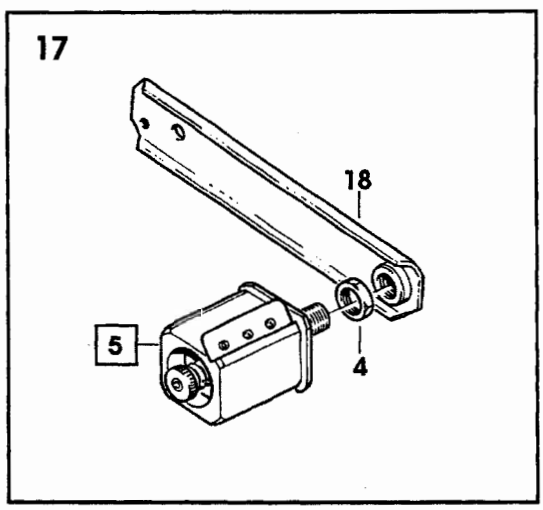

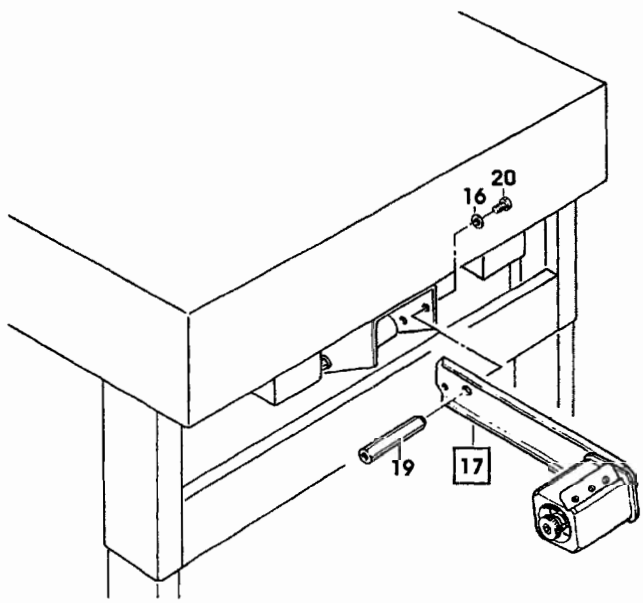

Figure 5187

Figure 5187

Ref. No.	3M Part No.	Description
5187-1	78-8094-6342-1	Bracket Assembly – Tape Drum
5187-2	78-8091-0605-3	Bracket – Core Holder
5187-3	78-8070-1568-6	Cap – Bracket
5187-4	78-8017-9169-6	Nut – M18 x 1
5187-5	78-8076-4732-2	Tape Drum Assembly – 3 Inch Head
5187-6	78-8060-8462-6	Shaft – Tape Drum
5187-7	78-8076-4731-4	Tape Drum Assembly – 3 Inch Wide
5187-8	78-8054-8815-8	Tape Drum Assembly
5187-9	78-8054-8816-6	Leaf Spring
5187-10	26-1002-5753-9	Screw – Self-Tapping
5187-11	78-8060-8172-1	Washer – Friction
5187-12	78-8052-6271-0	Washer – Tape Drum
5187-13	78-8054-8826-5	Spring
5187-14	78-8060-7511-1	Ring – Nut. Self-Tapping
5187-15	78-8032-0375-7	Screw – Hex Hd, M6 x 16
5187-16	26-1000-0010-3	Washer – Flat, M6
5187-17	78-8076-4935-1	Tape Drum Bracket Assembly
5187-18	78-8070-1395-4	Bracket – Bushing Assembly
5187-19	78-8076-4742-1	Spacer – Tape Drum Bracket
5187-20	78-8010-7169-3	Screw – Hex Hd, M6 x 12

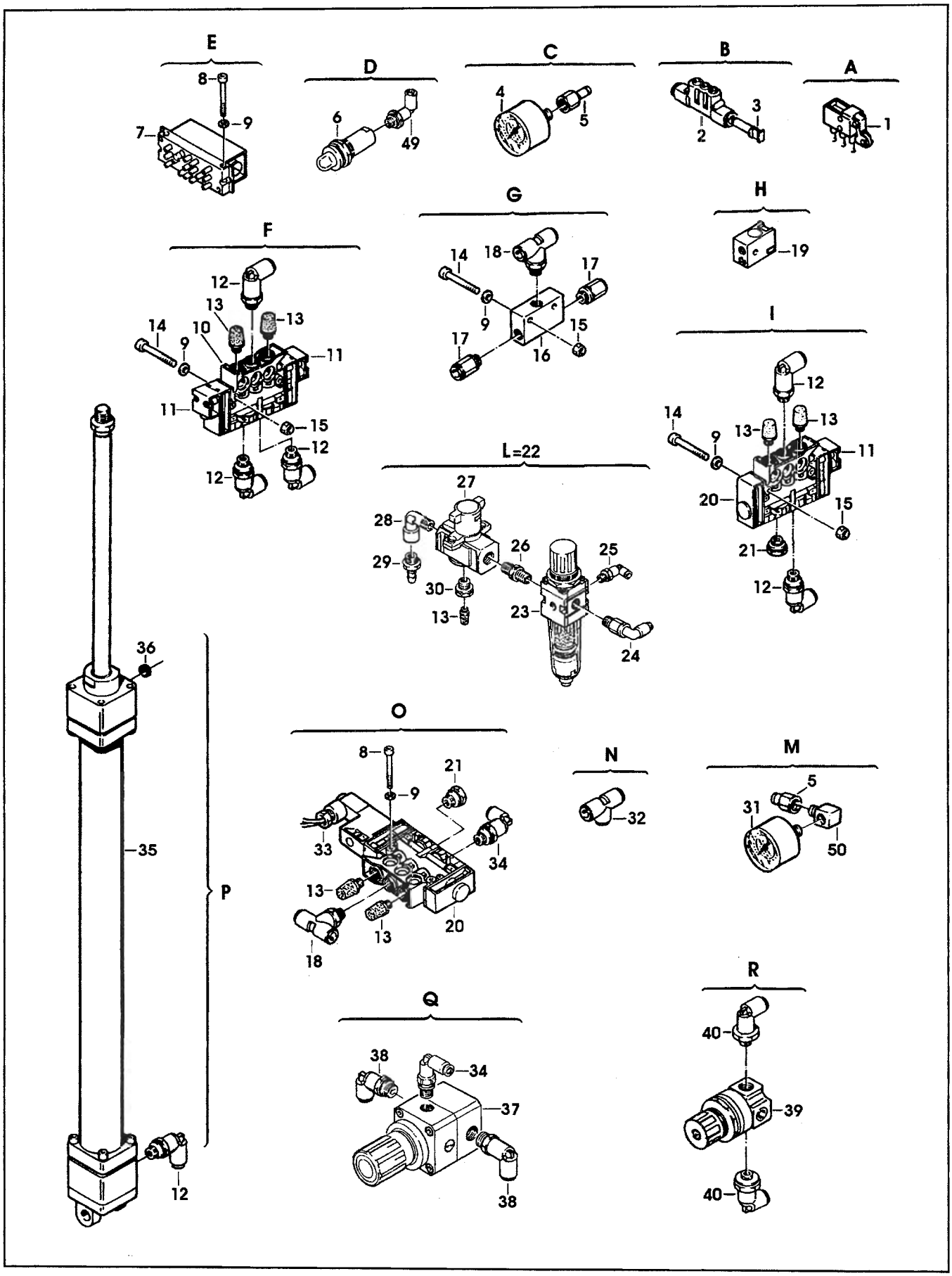

Figure 5188/1 of 2

Figure 5188 (page 1 of 2)

Ref. No.	3M Part No.	Description
5188-1	78-8060-8091-3	Valve – R/O-3-PK-3
5188-2	78-8094-6448-6	Union – TE 33040604
5188-3	78-8060-7861-0	End Cap – MR 290006
5188-4	78-8076-4671-2	Gauge – Pressure
5188-5	78-8076-4672-0	Union – Straight, Female
5188-6	78-8076-4665-4	Indicator – Visual
5188-7	78-8060-7656-4	Valve – VLK3-PK3
5188-8	78-8060-7711-7	Screw – Soc Hd, Hex Soc, M4 x 30
5188-9	78-8005-5740-3	Washer – Plain, 4 MM
5188-10	78-8094-6449-4	Valve – BIST 5-1/8 Inch
5188-11	78-8094-6450-2	Connector – PVA-P111
5188-12	26-1005-6893-5	Elbow – 90 Degree
5188-13	26-1005-6890-1	Muffler
5188-14	26-1003-7946-5	Screw – Soc Hd, M4 x 25
5188-15	26-1003-6914-4	Nut – Plastic Insert, M4
5188-16	26-1005-6904-0	Valve
5188-17	26-1005-6910-7	Union – Straight
5188-18	78-8060-8183-8	Union – Rotating, MR20-06-18
5188-19	78-8094-6451-0	Valve – Selector, PLK-A11
5188-20	78-8094-6452-8	Valve – MON 5-1/8 Inch
5188-21	78-8060-7690-3	Cap – B-1/8 Inch
5188-22	78-8094-6453-6	Filter Assembly
5188-23	78-8076-4668-8	Filter – Pressure Regulator
5188-24	78-8094-6454-4	Elbow – 31290613
5188-25	78-8094-6455-1	Union – 32990410

RLB 11/6/18

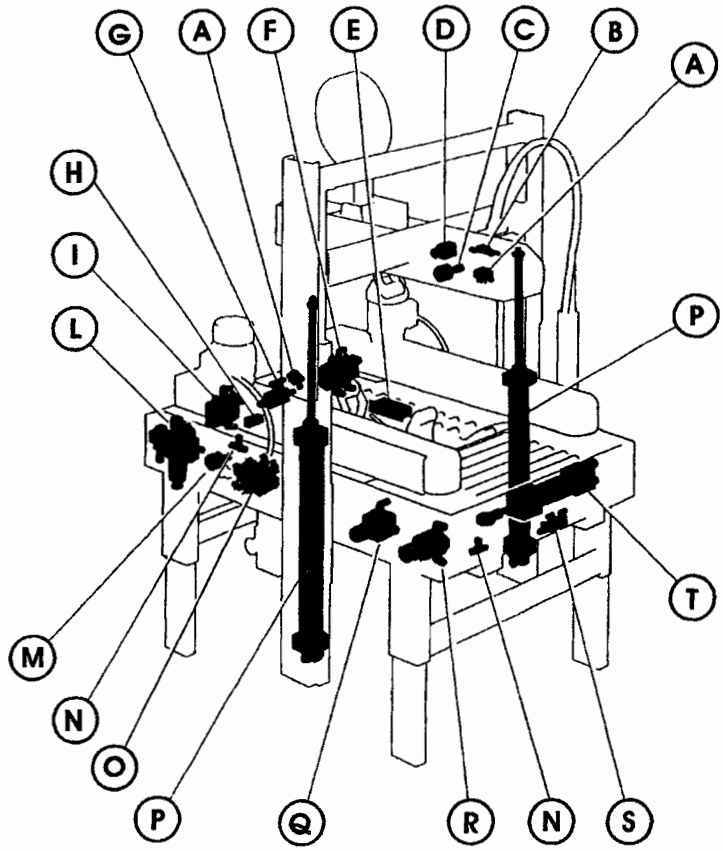

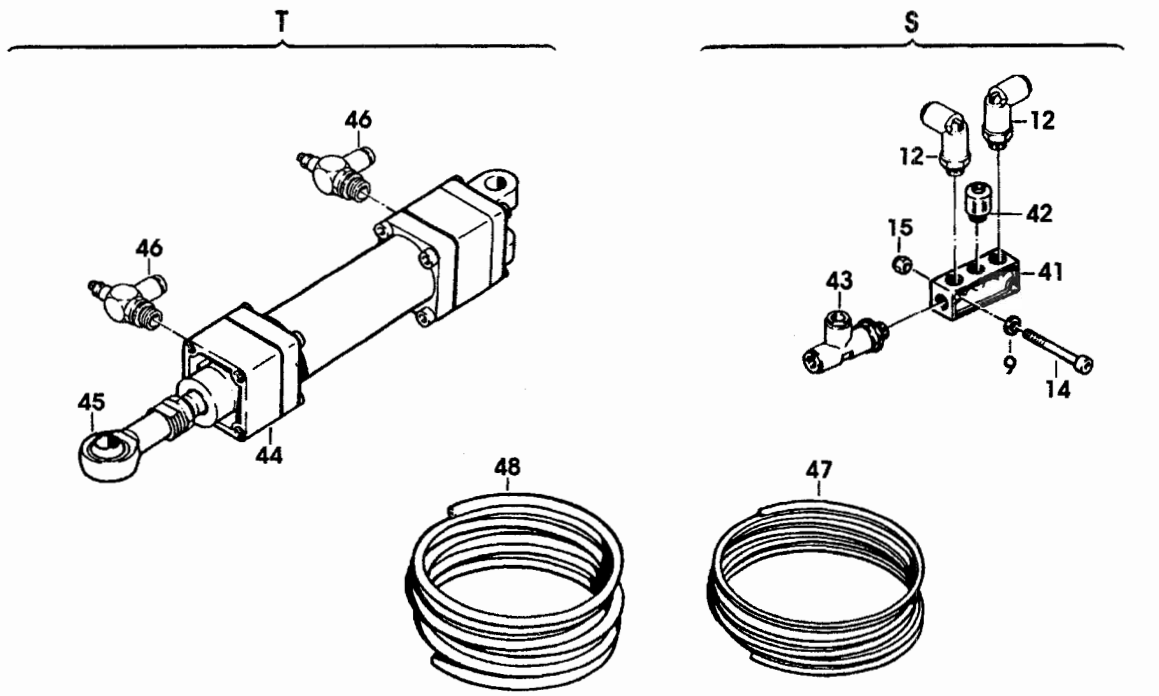

Figure 5188/2 of 2

Figure 5188 (page 2 of 2)

Ref. No.	3M Part No.	Description
5188-26	78-8060-7899-0	Nipple – RA 012, 1/4 Inch-1/4 Inch
5188-27	78-8091-0715-0	Valve – EVHS-4500, F02-X116
5188-28	78-8060-7900-6	Union – RA 022, 1/4 Inch-1/4 Inch
5188-29	26-1005-6897-6	Hose Connection
5188-30	78-8076-4670-4	Reduction – 3/8 Inch-1/8 Inch
5188-31	78-8054-8838-0	Gauge – Air
5188-32	78-8057-6170-3	Tee – 6 MM Tubing
5188-33	78-8094-6456-9	Actuator – PVA-H2491F, 100/115
5188-34	26-1005-5909-0	Elbow
5188-35	78-8054-8827-3	Cylinder – Air, C65D32-440CY01
5188-36	78-8094-6457-7	Cap – 1/8 Inch
5188-37	78-8094-6458-5	Reducer – LRP-1/4 Inch-4
5188-38	78-8094-6343-9	Elbow – 32990613
5188-39	78-8076-4675-3	Regulator – 0.5-7 Bar
5188-40	78-8055-0756-9	Union – Rotating, MR41-06-14
5188-41	78-8059-5633-7	Air Distributor
5188-42	78-8060-7853-7	Union – Straight, MR12-04-19
5188-43	26-1005-6884-4	Tee – Swivel, Lateral
5188-44	78-8100-0757-1	Cylinder – Air, C95SDB50-95+20
5188-45	78-8060-7724-0	Nut – M22X1,5
5188-46	78-8091-0510-5	Regulator – Speed
5188-47	78-8060-8033-5	Tubing – 5M Skein, D4/3
5188-48	78-8060-8034-3	Tubing – 5M Skein, D6/4
5188-49	78-8076-4888-2	Elbow – KQL04-01S
5188-50	78-8091-0638-4	Elbow – G-1/8-A/1
5188-00	78-8100-0758-9	Seal Kit – Cylinder, SMC /32
5188-00	78-8100-0759-7	Seal Kit – Cylinder, SMC /50

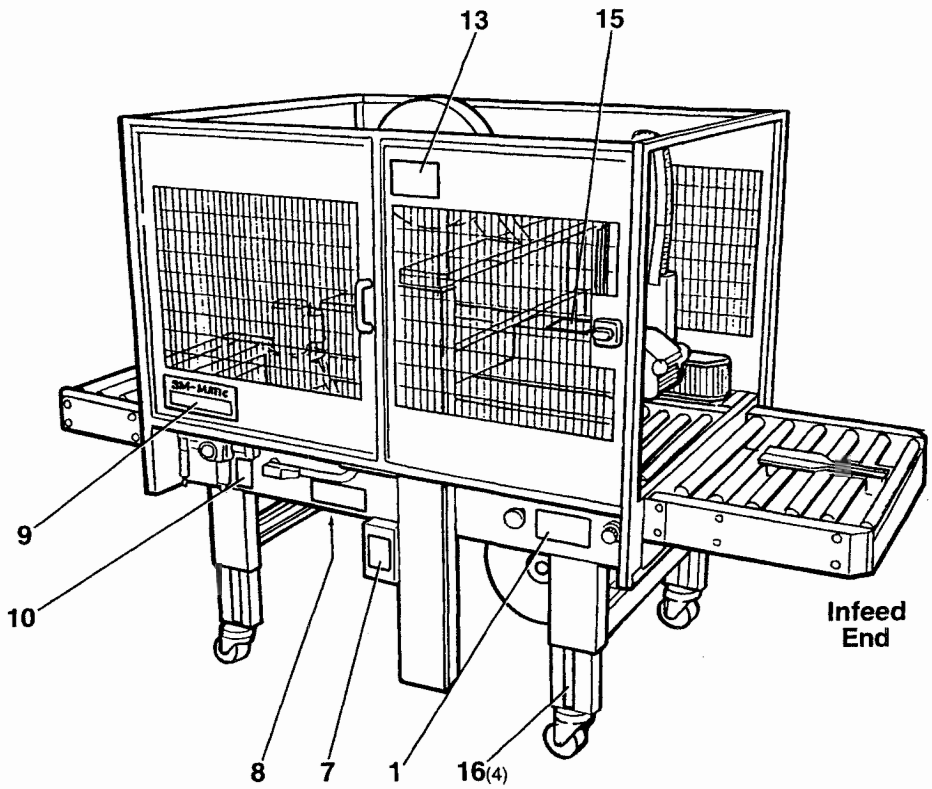

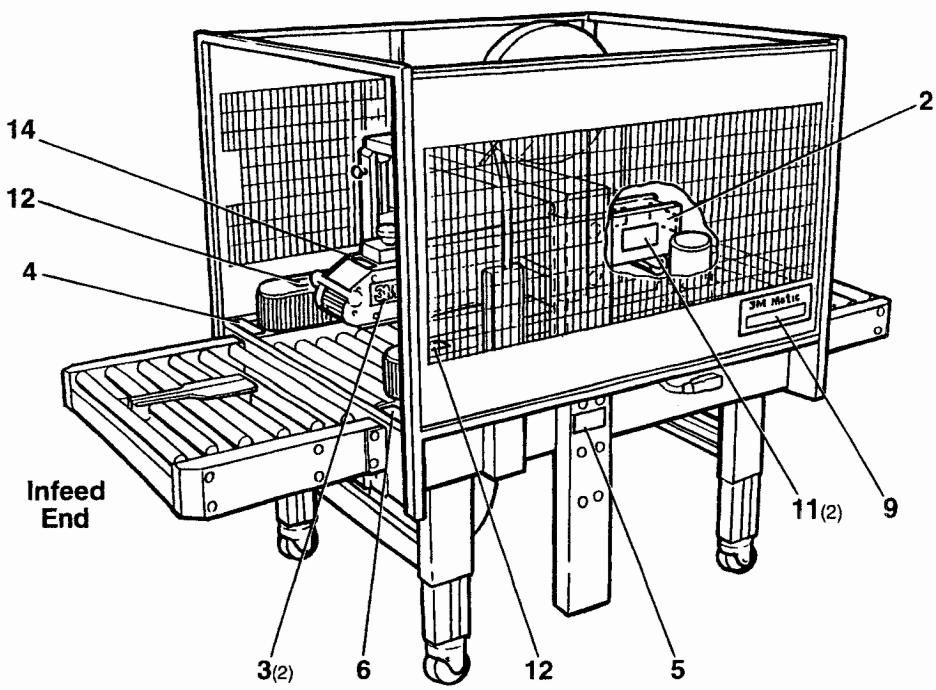

Note: Infeed/Exit conveyors and casters are optional.

Safety and Information Labels

800r3 Safety and Information Labels

A label kit, part number 78-8098-8903-9 is available as a stock item. It contains all the safety and information labels used on the case sealer, or labels can be ordered separately from the following list.

Ref. No.	3M Part No.	Description	Qty.
	78-8098-8903-9	Label Kit (Includes items 1-16)	
1	78-8098-8916-1	Label – Air Control	1
2	78-8070-1362-4	Label – Caution	1
3	78-8070-1339-2	Label – 3M Logo	2
4	78-8070-1331-9	Label – Warning	1
5	78-8068-3859-1	Label – Service and Spares	1
6	78-8070-1330-1	Label – Warning	1
7	78-8070-1329-3	Label – Warning	1
8	78-8068-3852-6	Label – Ground Symbol	1
9	78-8062-4266-1	Label – Product	2
10	78-8095-1050-2	Label – Air Supply	1
11	78-8070-1336-8	Label – Warning	2
12	78-8070-1629-6	Label – Belt Tensioning	2
13	78-8098-8917-9	Label – Latch Upper Head	1
14	78-8095-1141-9	Label – Stop	1
15	78-8070-1332-7	Label – Safety Instructions	1
16	78-8094-6487-4	Label – Leg	4

Instruction Manual

AccuGlide™ II STD 3 Inch
Upper and Lower Taping Heads
Type 29000

Table of Contents

	Page
Equipment Warranty and Limited Remedy	ii
Taping Head Contents	ii
Description	1
Warning and Information Labels	2
Specifications	3 - 4
Dimensional Drawing	4
Installation	5
Receiving and Handling	5
Installation Guidelines	5
Tape Leg Length	5
Tape Width	5
Operation	6 - 8
Tape Loading – Upper Taping Head	7 - 8
Tape Loading – Lower Taping Head	7 - 8
Maintenance	9 - 10
Blade Replacement	9
Blade Oiler Pad	9
Cleaning	10
Lubrication	10
Adjustments	11 - 13
Tape Web Alignment	11
Tape Drum Friction Brake	11
Applying Mechanism Spring	12
One-Way Tension Roller	12
Tape Leg Length	13
Leading Tape Leg Length Adjustment	13
Changing Tape Leg Length From 70 to 50 mm [2.75 to 2 Inch]	13
Troubleshooting	15 - 16
Troubleshooting Guide	15 - 16
Spare Parts/Service Information	17
Recommended Spare Parts	17
Replacement Parts and Service	17
Replacement Parts Illustrations and Parts List	Yellow Section 18 - 35

Equipment Warranty and Limited Remedy: THE FOLLOWING WARRANTY IS MADE IN LIEU OF ALL OTHER WARRANTIES, EXPRESS OF IMPLIED, INCLUDING, BUT NOT LIMITED TO, THE IMPLIED WARRANTY OF MERCHANTABILITY, THE IMPLIED WARRANTY OF FITNESS FOR A PARTICULAR PURPOSE AND ANY IMPLIED WARRANTY ARISING OUT OF A COURSE OF DEALING, A CUSTOM OR USAGE OF TRADE:

3M sells its **AccuGlide™ II STD 3 Inch Upper and Lower Taping Heads, Type 29000** with the following warranties:

1. The Taping Head knife blades, springs, and rollers will be free from all defects for ninety (90) days after delivery.
2. All other Taping Head parts will be free from all defects for three (3) years after delivery.

If any part is proved to be defective within its warranty period, then the exclusive remedy and 3M's and seller's sole obligation shall be, at 3M's option, to repair or replace the part, provided the defective part is returned immediately to 3M's factory or an authorized service station designated by 3M. A part will be presumed to have become defective after the warranty period unless the part is received or 3M is notified of the problem no later than five (5) calendar days after the warranty period. If 3M is unable to repair or replace the part within a reasonable time, then 3M, at its option, will replace the equipment or refund the purchase price. 3M shall have no obligation to provide or pay for the labor required to install the repaired or replacement part. 3M shall have no obligation to repair or replace (1) those parts failing due to operator misuse, carelessness, or due to any accidental cause other than equipment failure, or (2) parts failing due to non-lubrication, inadequate cleaning, improper operating environment, improper utilities, or operator error.

Limitation of Liability: 3M and seller shall not be liable for direct, indirect, special, incidental or consequential damages based upon breach of warranty, breach of contract, negligence, strict liability or any other legal theory.

The foregoing Equipment Warranty and Limited Remedy and Limitation of Liability may be changed only by a written agreement signed by authorized officers of 3M and seller.

Taping Head Contents

AccuGlide™II STD 3 Inch Upper Taping Head consists of:

Qty.	Part Name
1	Taping Head Assembly
1	Tape Drum and Bracket Assembly
1	Hardware and Spare Parts Kit
1	Threading Tool

AccuGlide™II STD 3 Inch Lower Taping Head consists of:

Qty.	Part Name
1	Taping Head Assembly
1	Tape Drum and Bracket Assembly
1	Hardware and Spare Parts Kit
1	Threading Tool

AccuGlide™, Scotch™, and 3M-Matic™ are Trademarks of 3M, St. Paul, Minnesota 55144-1000

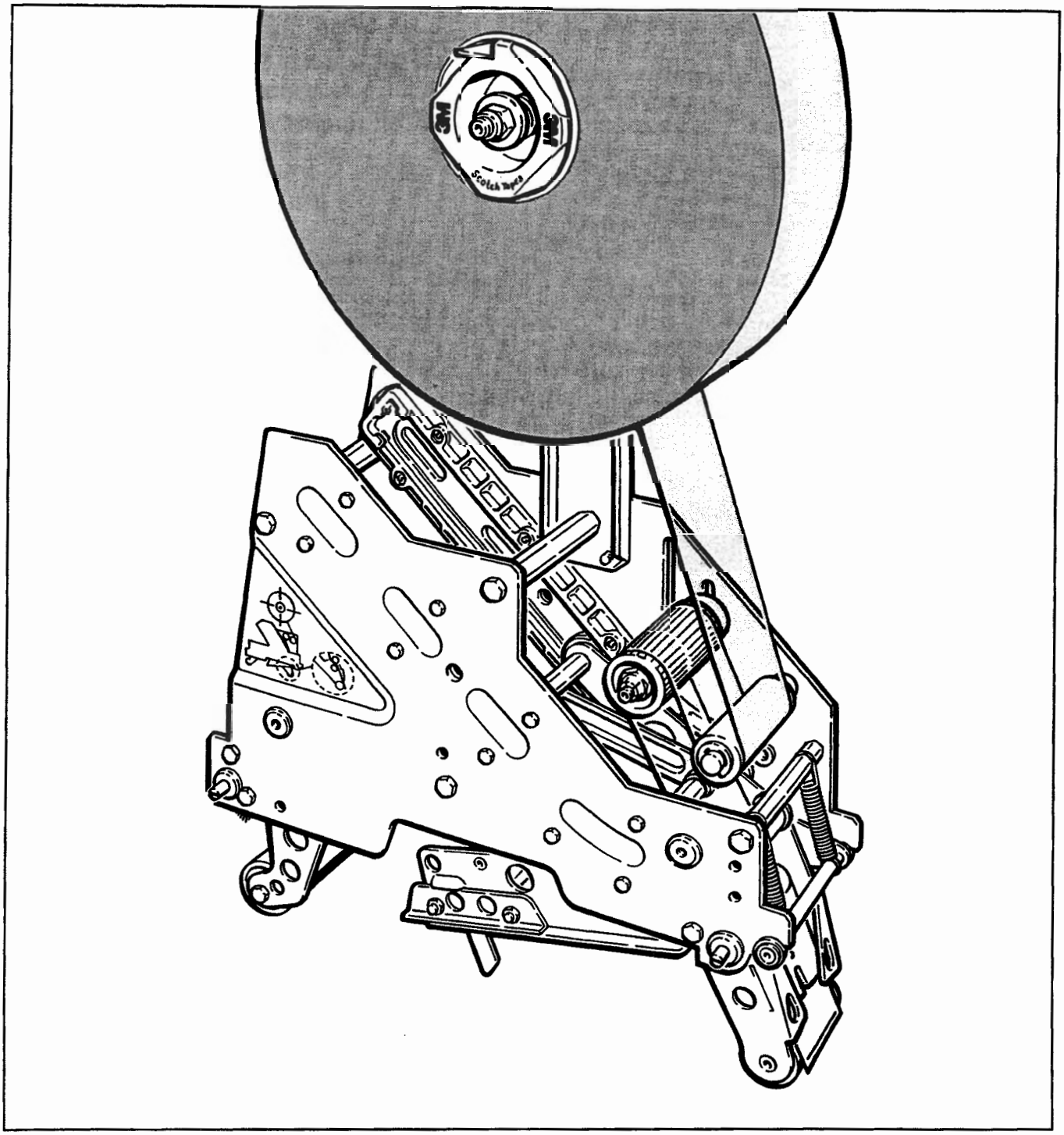

AccuGlide™ II STD 3 Inch Upper Taping Head, Type 29000

Description

The **AccuGlide™ II STD 3 Inch Upper and Lower Taping Heads,** were designed for installation on **3M-Matic™** case sealers. The taping heads apply a "C" clip of **"Scotch"** brand pressure-sensitive film box sealing tape to the top and bottom center seam of regular slotted containers.

The compact size and simplicity of the taping head also makes it suitable for mounting into other box conveying systems to tape cartons. This includes replacement of other types of taping, gluing or stapling heads in existing case sealing machines.

Warning and Information Labels

The **"Warning-Sharp Knife"** label warns operators and service personnel of the extremely sharp knife used to cut the tape at the end of the box sealing operation. The label, shown in Figure 1-1, is located on the orange blade guard between the applying roller assembly and the buffing roller assembly. **Never operate taping heads with blade guard removed.**

Before working with the taping heads or loading/ threading tape, refer to Figures 3-1 and 3-2 to identify the knife blade location. **Keep hands out of these areas except as necessary to service the taping heads or to load/thread tape.**

The **"Tape Threading Label",** shown in Figure 1-2, is attached to the left side of both the upper and lower taping heads. This label provides a convenient tape threading diagram. More detailed tape loading and threading information is provided in the "Operation" section this manual.

Turn air and electrical supplies "Off" before servicing the taping heads.

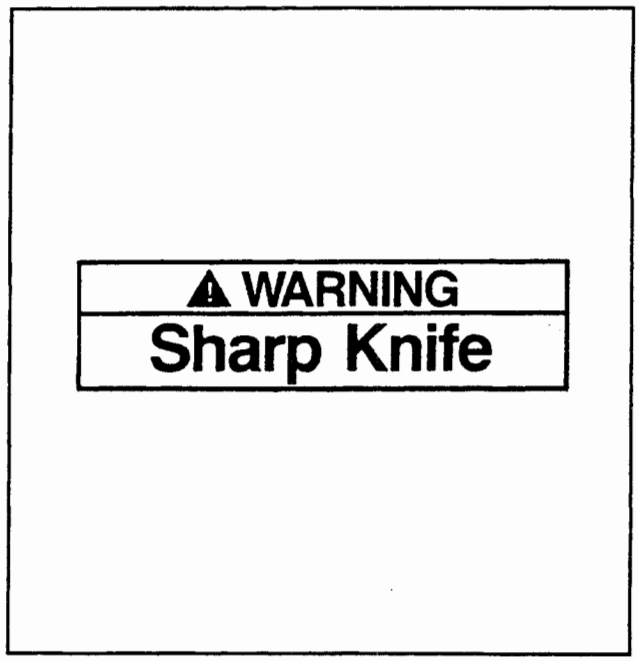

Figure 1-1 – Knife Warning Label

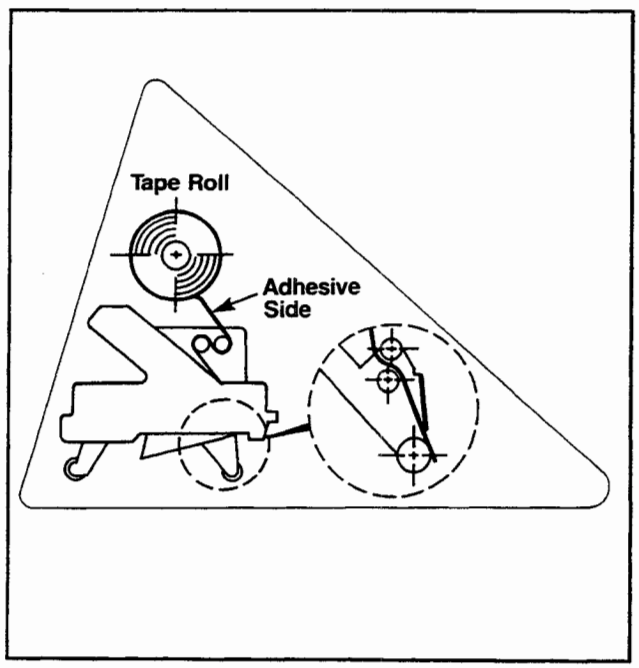

Figure 1-2 – Tape Threading Label

⚠ This safety alert symbol identifies important safety messages in this manual. READ AND UNDERSTAND THEM BEFORE INSTALLING OR OPERATING THIS EQUIPMENT.

Specifications

1. **Tape:**

   For use with **"Scotch"** brand pressure-sensitive film box sealing tapes.

2. **Tape Width:**

   48 mm [2 inches] minimum to 72 mm (3 inches) maximum.

3. **Tape Roll Diameter:**

   Up to 405 mm [16 inches] maximum on a 76.2 mm [3 inch] diameter core.
   (Accommodates all system roll lengths of **"Scotch"** brand film tapes.)

4. **Tape Application Leg Length - Standard:**

   70 mm ± 6 mm [2.75 inches ± .25 inch]

   Tape Application Leg Length - Optional:

   50 mm ± 6 mm [2 inches ± .25 inch] (See "Adjustments – Tape Leg Length", page 13.)

5. **Box Size Capacities:**

   For use with center seam regular slotted containers.

	Minimum	**Maximum**
Length –	150 mm [6 inches]	Unlimited
Height –	120 mm [4.75 inches] (most "3M-Matic" Case Sealers) 90 mm [3.50 inches] (with optional 2 inch leg length)	Limited by Case Sealer
Width –	150 mm [6 inches]	

   When upper and lower taping heads are used on **"3M-Matic"** case sealers, refer to the respective instruction manual specifications for box weight and size capacities.

6. **Operating Rate:**

   Conveyor speeds up to 0.40 m/s [80 FPM] maximum.

7. **Operating Conditions:**

   Use in dry, relatively clean environments at 5° to 40° C [40° to 105° F.] with clean dry boxes.

   Important – Taping heads should not be washed down or subjected to conditions causing moisture condensation on components.

7. **Taping Head Dimensions:**

Length	–	400 mm [15.75 inches]
Height	–	560 mm [22 inches] (with tape drum)
Width	–	130 mm [5.18 inches] (without mounting spacers)
Weight	–	Packaged: 8.6 kg [19 lbs.] Unpackaged: 7.7 kg [17 lbs.]

Specifications

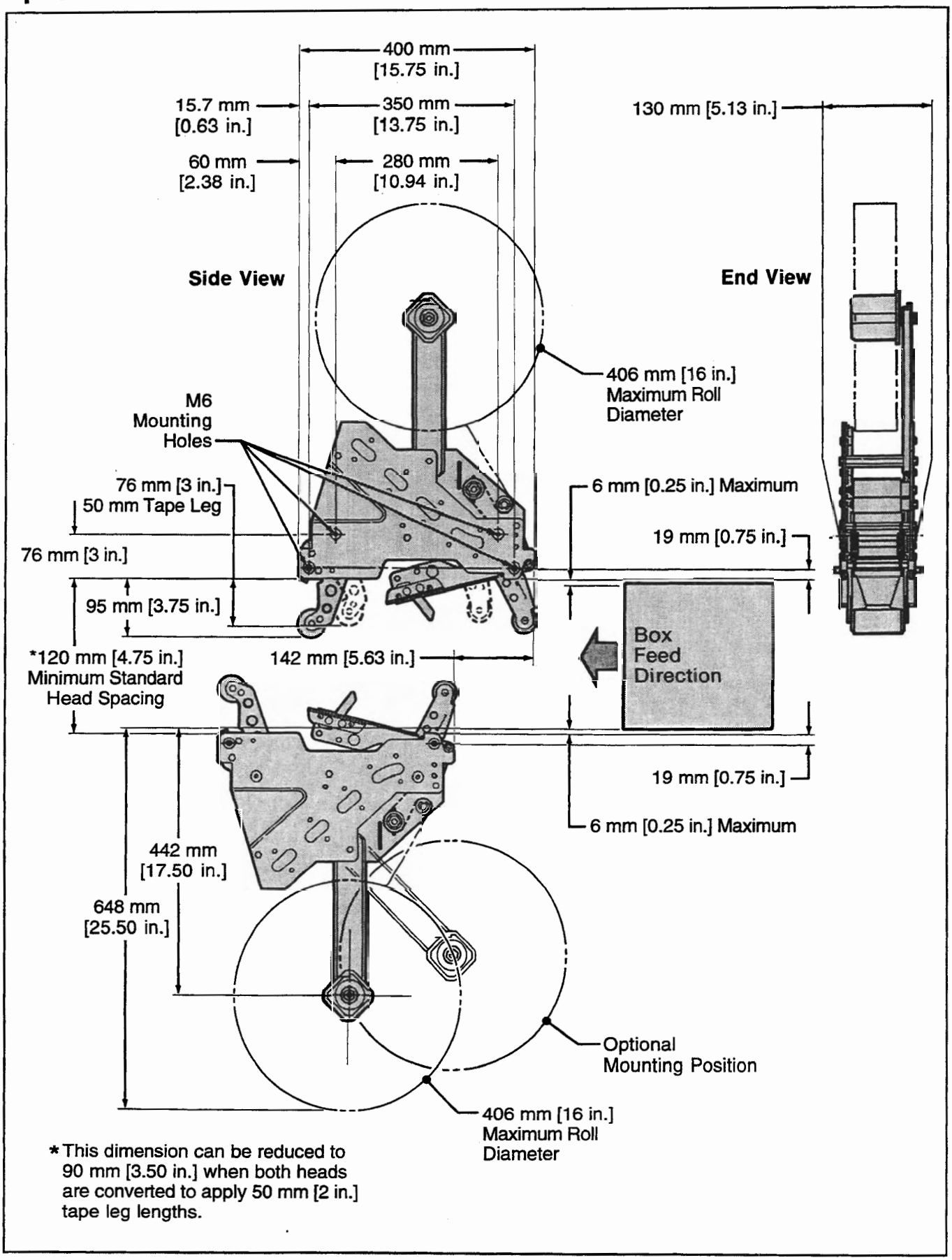

Figure 2-1 – Dimensional Drawing

Installation

WARNING – Taping Heads utilize extremely sharp knife blades. The blades are located under the orange blade guard which has the "Warning – Sharp Knife" label. Before working with the taping heads or loading tape, refer to Figures 3-1 and 3-2 on page 6 and identify the blade location. Keep hands out of these areas except as necessary to service the taping heads.

Receiving And Handling

After the taping head assembly has been unpackaged, examine the unit for damage that might have occurred during transit. **If damage is evident, file a damage claim immediately** with the transportation company and also notify your 3M Representative.

Installation Guidelines

The taping head assembly can be used in converting existing or in custom made machinery. It can be mounted for top taping or bottom taping. Refer to box size specifications on page 3, and Figure 2-1 on page 4, for the following points in making such installations:

1. The box conveying system must positively propel the box in a continuous motion, **not exceeding 0.40 m/s [80 feet per minute]**, past the taping head assembly since the box motion actuates the taping mechanism.

2. If a pusher or cleated conveyor is being used, steps should be taken in the conveyor design to **prevent the pusher from contacting the applying or buffing roller arms resulting in damage to the taping head.**

3. Figure 2-1 illustrates the typical mounting relationship for opposing taping head assemblies to allow taping of box heights down to 90 mm [3.50 inches]. **To tape box heights down to 70 mm [2.75 inches], the taping heads must be completely staggered so only one tape seal is being applied at one time.**

4. Mounting studs are provided with the taping head, but special installations may require alternate means for mounting.

5. Box hold-down or guide skis should be provided and the taping head mounted so that the side plates are 6 mm [.25 inch] maximum away from the ski surface on which the box rides.

Tape Leg Length

Taping heads are factory set to apply standard 70 mm [2.75 inch] tape legs. The heads can be converted to apply 50 mm [2 inch] tape legs if desired but both upper and lower heads must be set to apply the same tape leg length. See "Adjustments – Changing Tape Leg Length From 70 to 50 mm [2.75 to 2 Inches]", page 13.

Also, the conveyor speed at which the product moves through the taping heads, affects the leading and trailing tape leg length. See, "Adjustments – Leading Tape Leg Length Adjustment", page 13.

Tape Width

Taping heads are factory set to apply 72 mm (3 inch) wide tape. To apply narrower tapes, refer to "Adjustments – Tape Web Alignment", page 11 for set-up procedure.

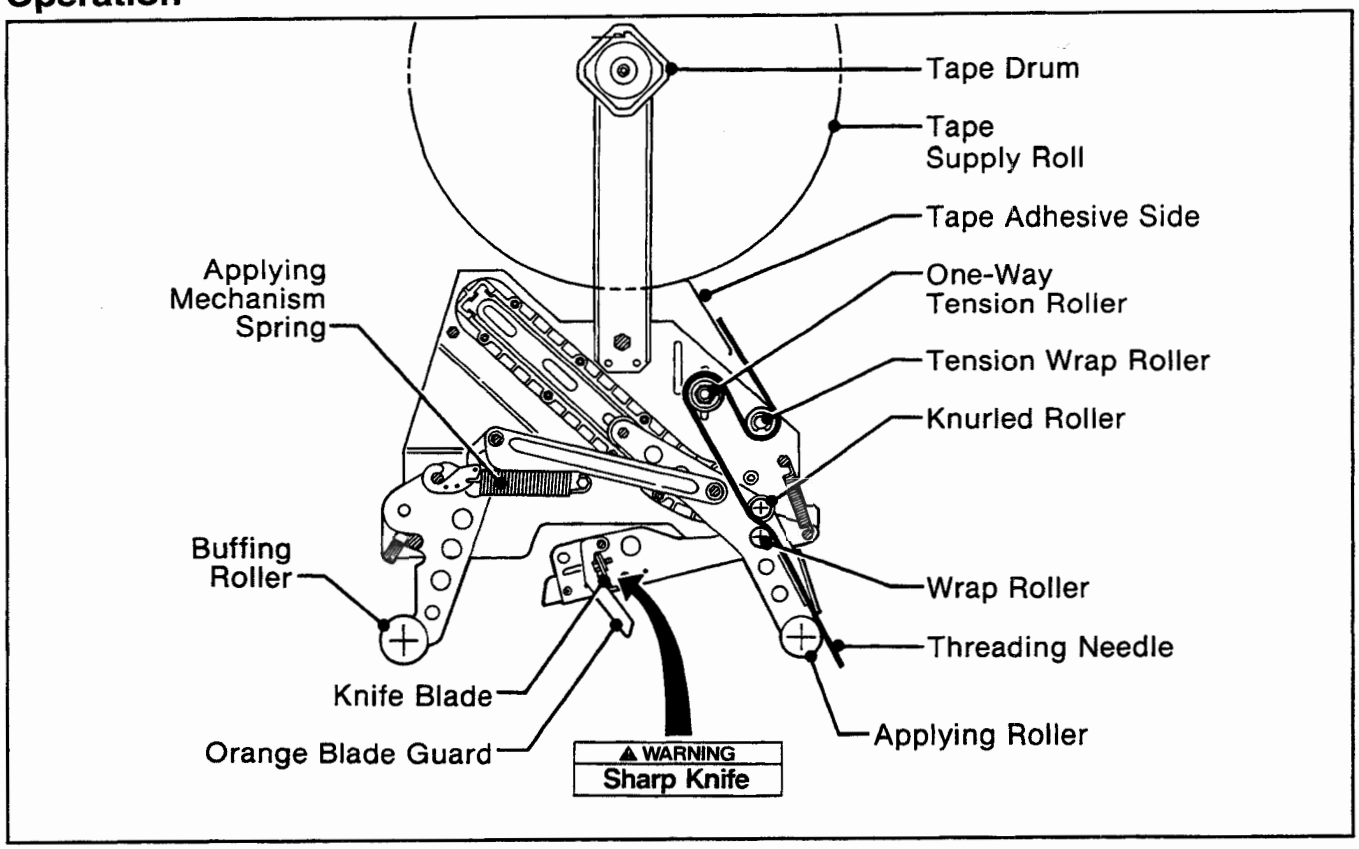

Figure 3-1 – Taping Head Components/Threading Diagram, Upper Head (Left Side View)

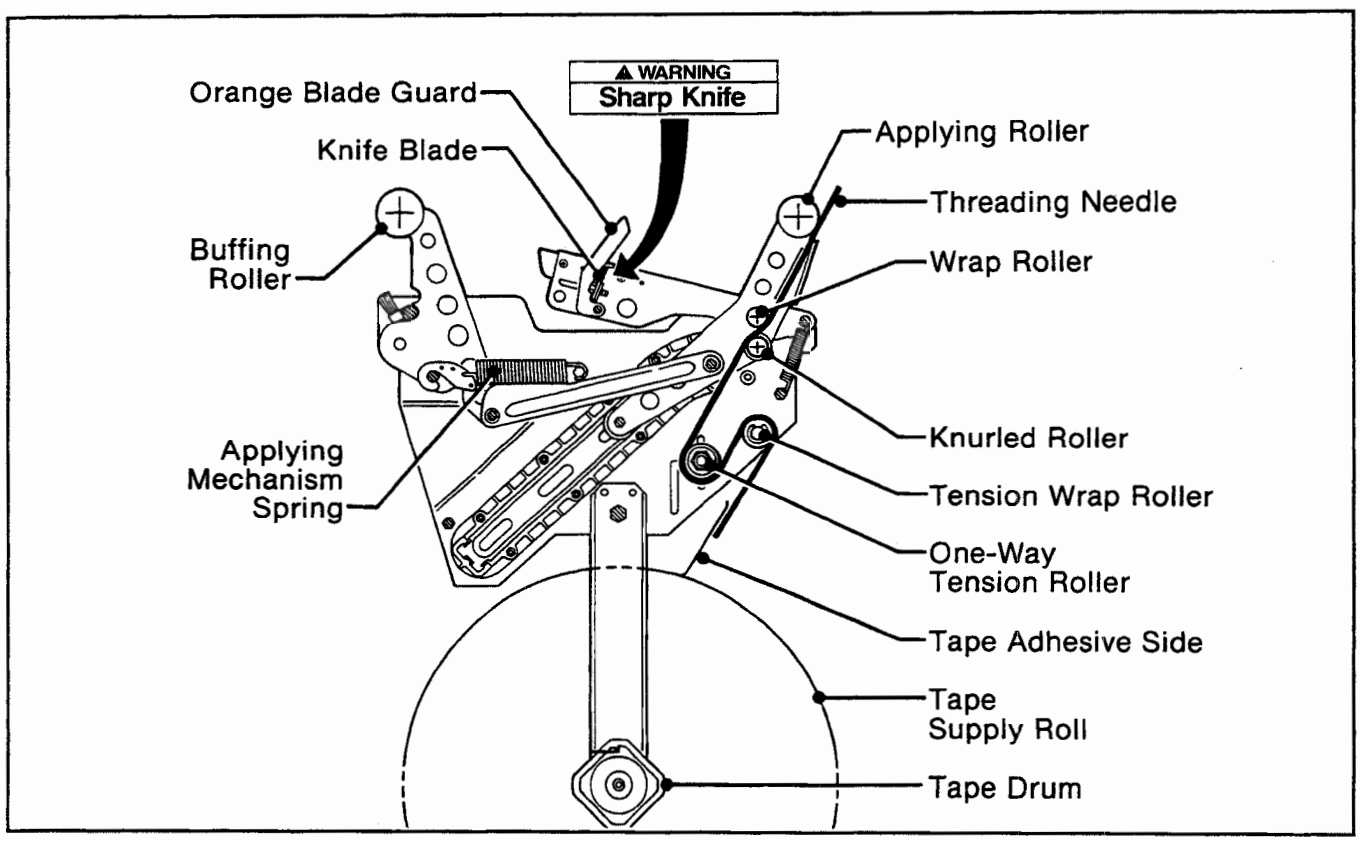

Figure 3-2 – Taping Head Components/Threading Diagram – Lower Head (Left Side View)

WARNINGS

1. **Turn air and electrical supplies off and disconnect before servicing taping heads.**
2. **Never attempt to work on the taping heads or load tape when the box drive system is running.**
3. **The taping heads use extremely sharp knife blades. Before working with the taping heads or attempting to load/thread tape, refer to Figures 3-1 and 3-2 and identify the blade location. Keep hands out of these areas except as necessary to service the taping heads.**
4. **Failure to comply with these warnings can result in severe personal injury and/or equipment damage.**

It is recommended that the detailed instructions and sketches in this manual be referred to the first few times the taping head is loaded/threaded until the operator becomes thoroughly familiar with the tape loading operation.

Tape Loading – Upper Taping Head

1. Raise the upper taping head to a convenient working position.
2. Use the plastic threading needle (provided) and follow the loading procedures (Figures 3-3 to 3-5) to complete the tape threading.

Tape Loading – Lower Taping Head

1. For ease in loading, first remove the lower taping head from the conveyor bed.
2. The lower taping head is loaded and threaded in the same manner as the upper head. Follow the upper taping head tape loading/threading procedure.

Figure 3-3

Insert threading needle through rollers in direction indicated by arrows.

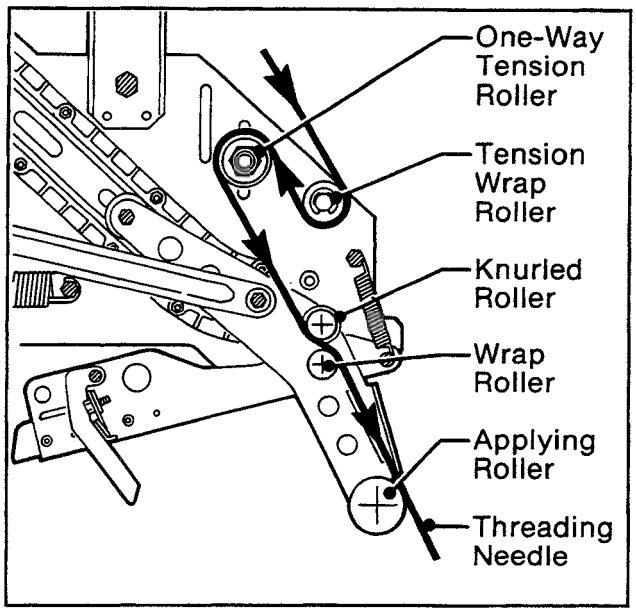

Figure 3-3 – Tape Loading/Threading

Figure 3-4

Place tape roll on tape drum to dispense tape with adhesive side forward. Seat tape roll fully against back flange of drum. Adhere tape lead end to threading needle as shown.

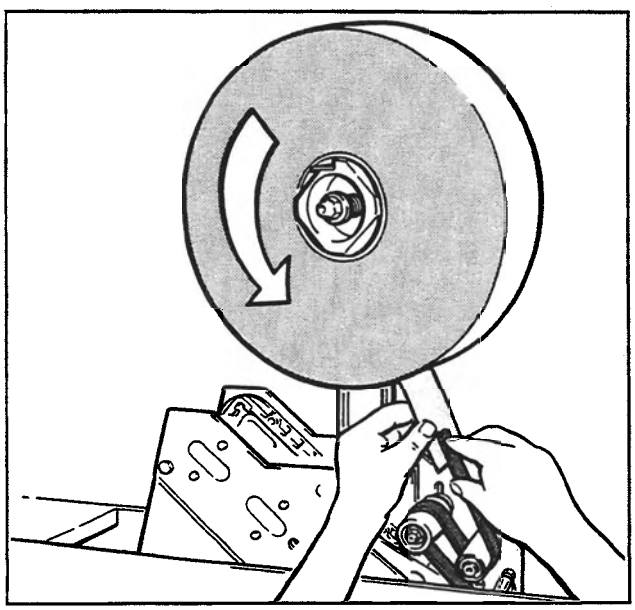

Figure 3-4 – Tape Loading/Threading

Operation (Continued)

Figure 3-5

WARNING – Use care when working near cut-off blade as blade is extremely sharp. If care is not taken, severe personal injury could result.

Manually turn tape roll to create slack tape while pulling threading needle through tape applying mechanism until needle is through and tape is in alignment with applying roller.

Excess tape can be cut with a scissors at applying roller.

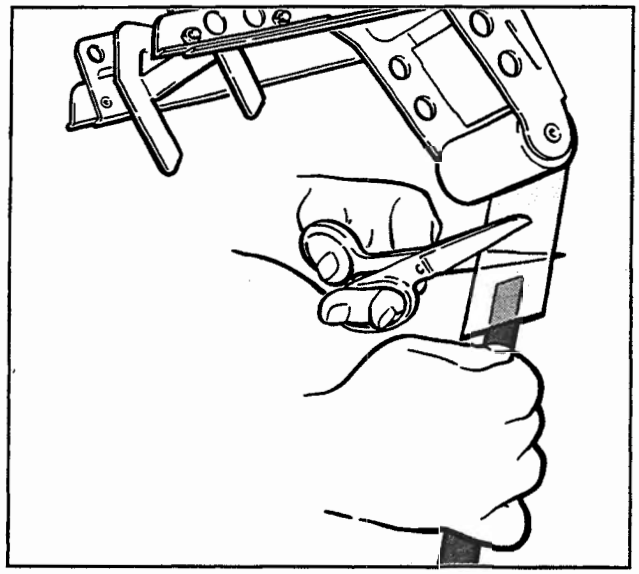

Figure 3-5 – Tape Loading/Threading

Maintenance

⚠ WARNINGS

1. **Turn air and electrical supplies off and disconnect before beginning maintenance.**
2. **Use care when working near tape cut-off blade as blade is extremely sharp.**
3. **Failure to comply with these warnings could result in severe personal injury or equipment damage.**

The **AccuGlide™ STD II 3 Inch Taping Head** has been designed for long, trouble free service. The taping head will perform best when it receives routine maintenance and cleaning. Taping head components that fail or wear excessively should be promptly repaired or replaced to prevent damage to other portions of the head or to the product.

Blade Replacement, Upper and Lower Taping Heads – Figure 4-1

1. Loosen, but do not remove, the blade screws **(A)**. Remove and discard old blade.
2. Mount the new blade **(B)** with the **beveled side away** from the blade holder.
3. Bottom the blade slots against the screws. (This will position the blade at the correct angle.) Tighten the blade screws to secure the blade.

Note – Check the blade position to insure proper clearance between blade and guard by slowly pivoting the blade guard back.

Blade Oiler Pad

The taping heads are equipped with a felt oiler pad that has been pre-lubricated at the factory to provide a film of oil on the cutting edge of the blade to reduce adhesive build-up. Apply SAE #30 non-detergent oil as needed. **Saturate felt oiler pad.**

Should tape adhesive build-up occur on blade, carefully wipe clean with an oily cloth.

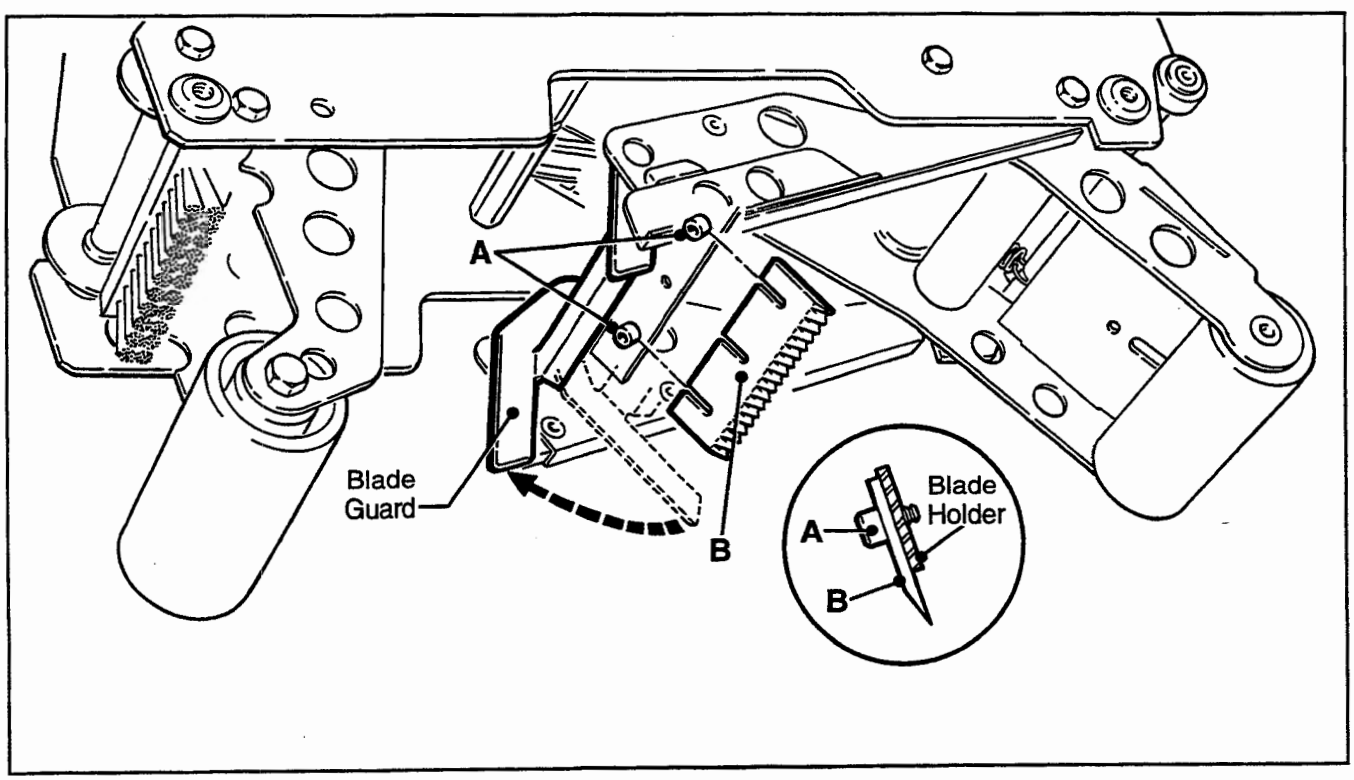

Figure 4-1 – Blade Replacement

⚠ WARNINGS

1. **Turn air and electrical supplies off and disconnect before beginning maintenance.**
2. **Use care when working near tape cut-off blade as blade is extremely sharp.**
3. **Failure to comply with these warnings could result in severe personal injury or equipment damage.**

Cleaning

Regular slotted containers produce a great deal of dust and paper chips when conveyed through taping heads. If this dust is allowed to build-up on the heads, it can cause wear on the moving parts. Excessive dirt build-up should be wiped off with a damp cloth. Cleaning should be done **once per month,** depending on the number and type of boxes used. If the boxes used are dirty, or if the environment in which the heads operate is dusty, cleaning on a more frequent basis may be necessary.

Note - Never attempt to remove dirt from taping heads by blowing it out with compressed air. This can cause the dirt to be blown inside the components onto sliding surfaces. Dirt in these areas can cause serious equipment damage. Never wash down or subject taping heads to conditions causing moisture condensation on components. Serious equipment damage could result.

Lubrication

Like most other equipment, the taping head must be properly lubricated to insure long, trouble free service.

Figure 4-2 illustrates points which should be lubricated **every 3 months or 150,000 machine cycles,** whichever comes first. Lubricate the rotating and pivoting points noted by the arrows (➡)with SAE #30 non-detergent oil. At the same time, a small amount of multipurpose grease should be applied to the guides and to the end of each spring where the loop is secured at an eyelet, post, or hole noted by arrows (⇨).

Note – Wipe off excess oil and grease. It will attract dust and dirt which can cause premature equipment wear and jamming. Take care that oil and grease are not left on the surface of rollers around which tape is threaded, as it can contaminate the tape's adhesive.

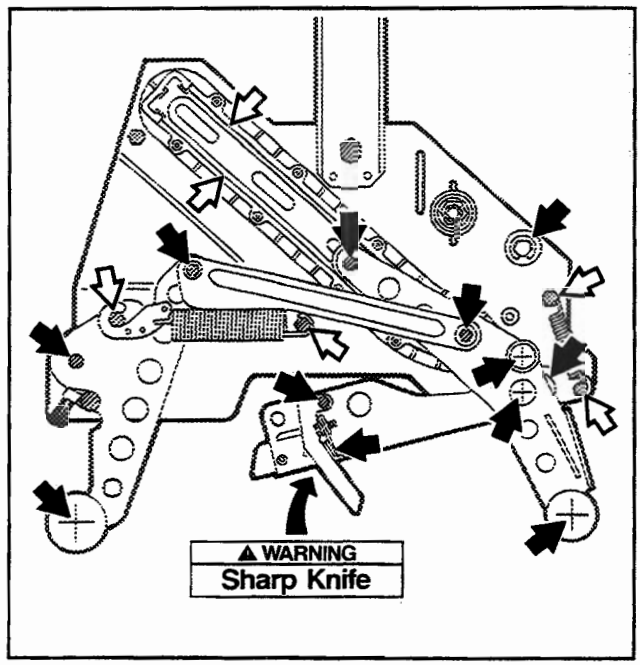

Figure 4-2 – Lubrication Points, Upper and Lower Taping Heads

Applying/Buffing Roller Replacement

Replacing roller requires removal of shaft and mounting screws. With no area on the shaft to grip, the shaft often turns when attempting to remove the second screw.

To ease removal of second screw, a 4 mm hex socket has been provided at the bottom of the threads in both ends of the shaft. Insert a 4 mm hex key wrench into this socket after removing one screw to hold the shaft for removal of the second screw. See Figure 4-3.

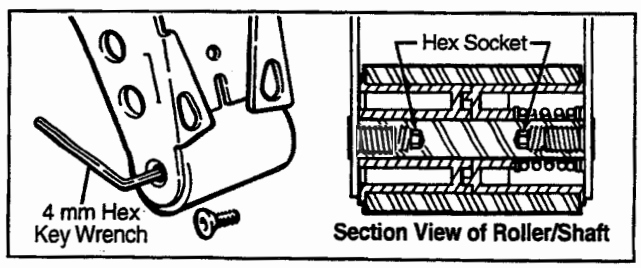

Figure 4-3 – Section View of Roller Shaft

Adjustments

WARNING – Turn air and electrical supplies off and disconnect before beginning adjustments. Failure to comply with this warning could result in severe personal injury and/or equipment damage.

Tape Web Alignment – Figure 5-1

The STD tape drum assembly is pre-set to accommodate 72 mm [3 inch] wide tape. The tape drum assembly is adjustable to provide alignment of narrower tapes. If adjustment is necessary to center the tape width on the centerline of the taping head, (and therefore box center seam), make adjustment as follows:

1. Loosen the locking hex nut behind tape drum bracket on tape drum shaft. Use an adjustable wrench or 25 mm open end wrench.

> **Note** – To set up 72 mm tape drum for 48 mm tape, disassemble tape drum from bracket and install lock nut between tape drum and bracket as shown in inset, Figure 5-2.

2. Turn tape drum shaft in or out to center the tape web (use 5 mm hex wrench).
3. Tighten locking hex nut to secure the adjustment.

No other components require adjustment for tape web alignment.

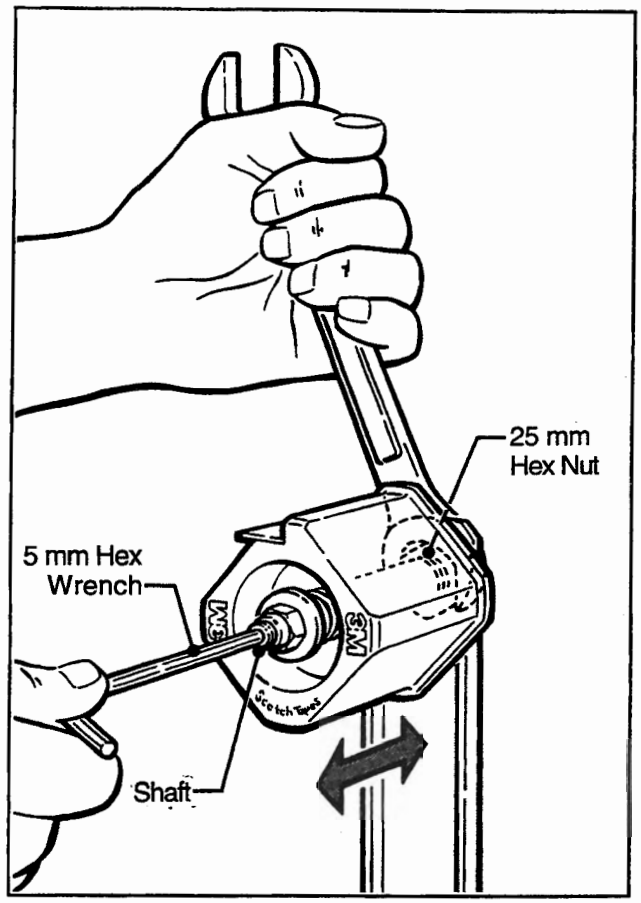

Figure 5-1 – Tape Web Alignment

Tape Drum Friction Brake – Figure 5-2

The tape drum friction brake on each taping head is **pre-set** for normal operation to prevent tape roll over travel. Should tension adjustment be required, **turn the self-locking nut on the shaft to vary compression of the spring.** Turn the nut **clockwise to increase** the braking force, and **counterclockwise to decrease** the braking force. Adjust brake to minimum tension to prevent excessive tape roll over travel.

> **Note** – Excess braking force will cause poor tape application and may lead to tape tabbing on the trailing tape leg.

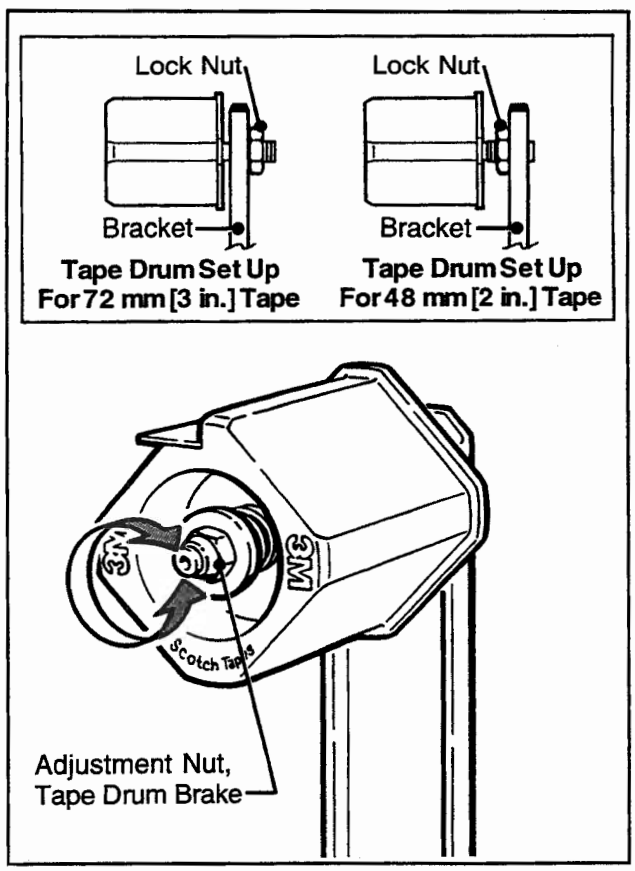

Figure 5-2 – Tape Drum Friction Brake

Adjustments (Continued)

WARNING – Turn air and electrical supplies off and disconnect before beginning adjustments. Failure to comply with this warning could result in severe personal injury and/or equipment damage.

Applying Mechanism Spring

The applying mechanism spring, shown in Figures 3-1 and 3-2, controls applying and buffing roller pressure on the box and returns the mechanism to the reset position. The spring pressure is pre-set, as shown in Figure 5-3A for normal operation, but is adjustable.

If a tape gap appears on the trailing surface of the box increase spring pressure. If the front of the box is being crushed by the applying roller decrease spring pressure.

Removing the spring end loop from the spring holder and placing loop in other holes provided, as shown in Figure 5-3B, will adjust the spring pressure.

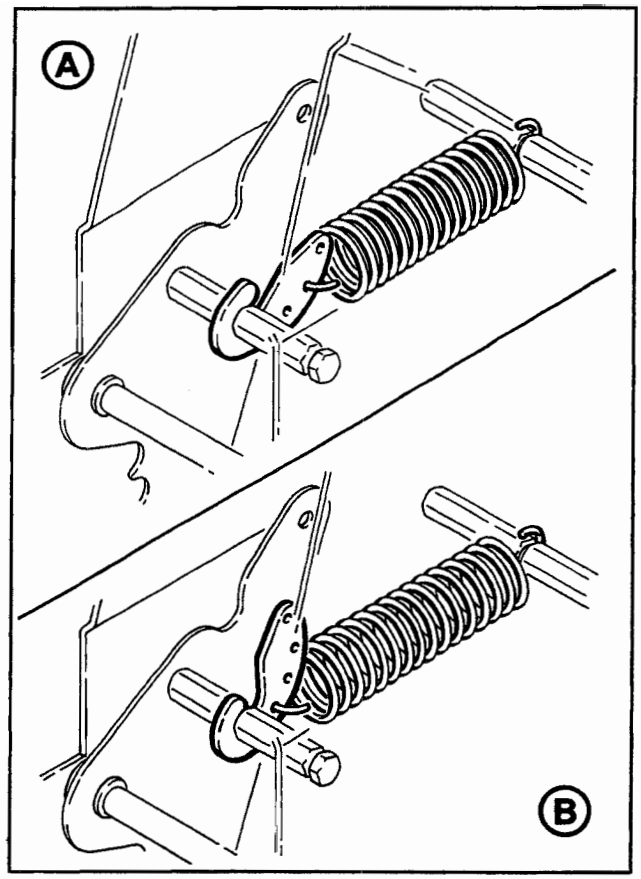

Figure 5-3 – Applying Mechanism Spring

One-Way Tension Roller

Figure 5-4

The one-way tension roller is factory set. When replacing this assembly, the roller must have 0,5 kg [1 lb.] minimum tangential force when turning.

To Adjust Tension:

1. Wrap a cord or small strap (non-adhesive) 4-6 turns around the tension roller.
2. Attach a spring scale to the end of the cord or strap.
3. Turn the adjusting nut with the socket wrench provided, until a force of approximately 0,5 kg to 0,9 kg [1 to 2 lbs.] is required to turn the roller by pulling on the spring scale.

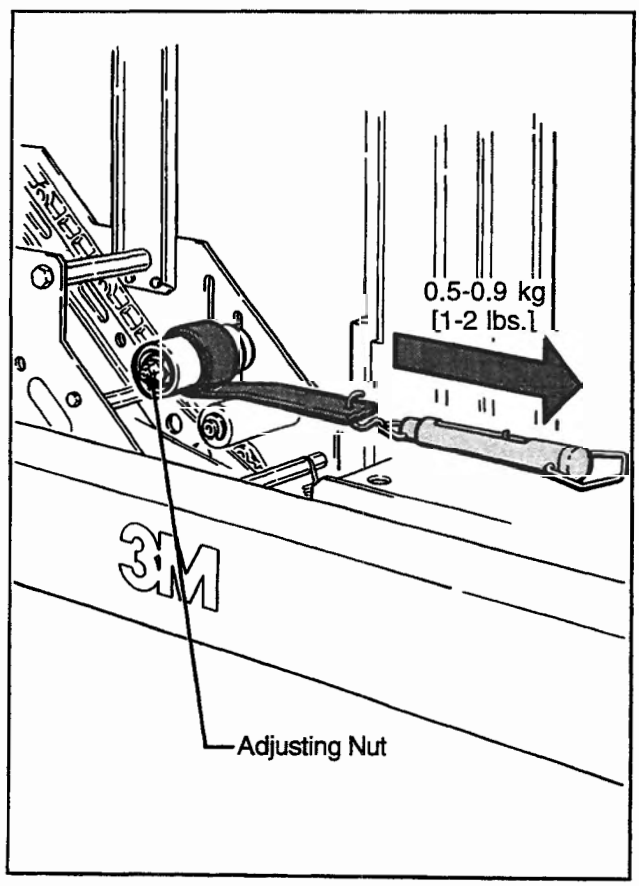

Figure 5-4 – One-Way Tension Roller

Adjustments (Continued)

WARNING – Turn air and electrical supplies off and disconnect before beginning adjustments. Failure to comply with this warning could result in severe personal injury and/or equipment damage.

Tape Leg Length

WARNING – Use care when working near cut-off blade as blade is extremely sharp. If care is not taken, severe injury could result.

LEADING TAPE LEG LENGTH ADJUSTMENT – Figure 5-5

The one-way tension roller position is adjustable to control the leading tape leg length.

Moving this roller farther away from the box top or bottom surface will decrease the leading leg length. Moving it closer to the box top or bottom surface will increase the leading leg length.

CHANGING TAPE LEG LENGTH FROM 70 to 50 mm [2.75 TO 2 INCHES] – Figure 5-6

Note – When changing tape leg length, both upper and lower heads must be adjusted to apply the same leg lengths.

1. Remove and retain two hex head screws and remove the brush from normal position "A" on side frame.
2. Remount and secure brush in position "A-A" on side frame forward of normal location using original fasteners.
3. Remove cut-off bracket extensions from position "B".
4. Remount cut-off bracket extensions in forward position "B-B".
5. Remove and retain the one-way tension roller assembly from slot "C" in frame.
6. Remount tension roller assembly near top of slot "C-C" in frame using original fasteners.
7. Adjust tension roller according to "Leading Tape Leg Length Adjustment" above.

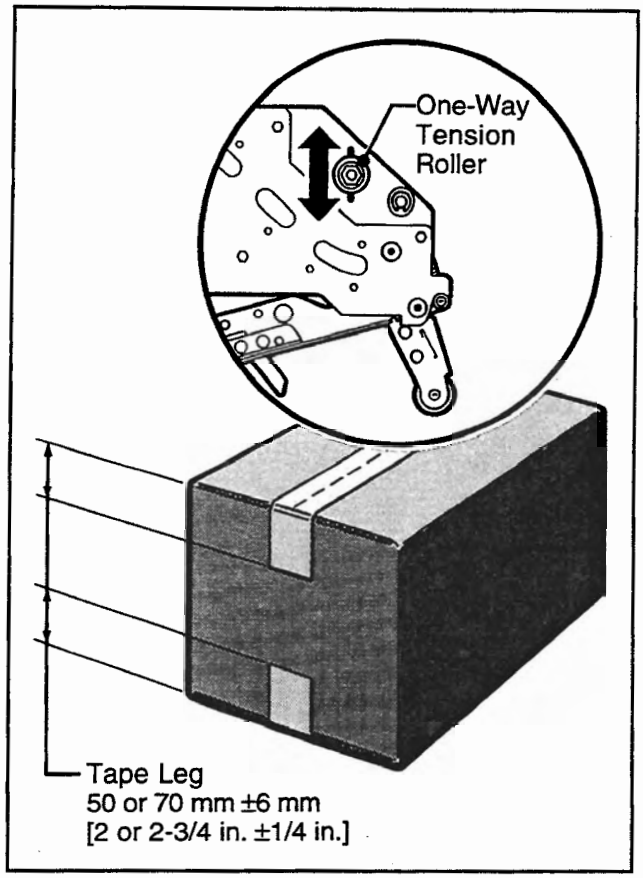

Figure 5-5 – Leading Tape Leg Length

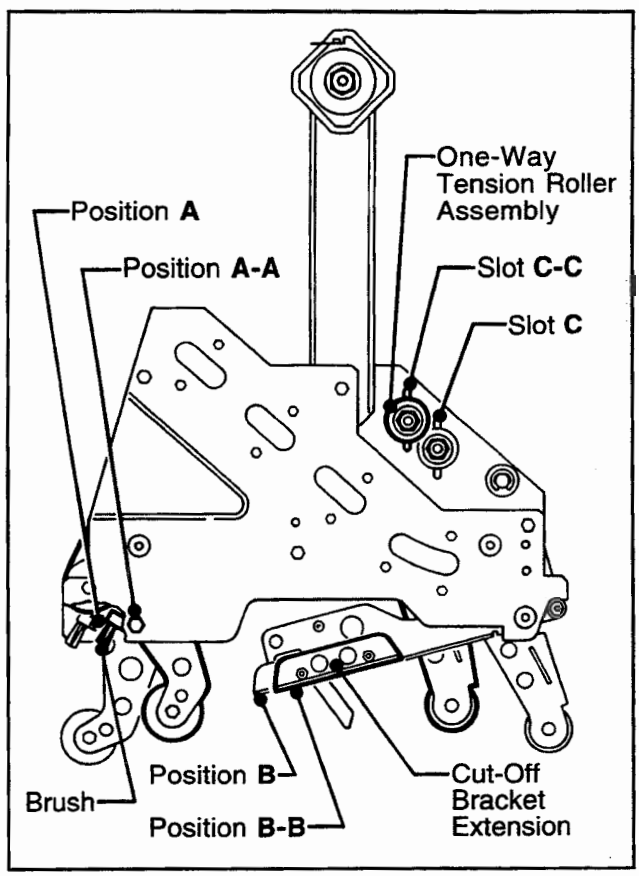

Figure 5-6 – Changing Tape Leg Length

THIS PAGE IS BLANK

Troubleshooting

Troubleshooting Guide

Problem	Cause	Correction
The tape leg on the front of the case is too long	The tape is threaded incorrectly	The tape must go around the wrap roller before going around the one-way tension roller
	The tape tension is too low	Adjust the one-way tension roller
	The knurled roller drags	Check for adhesive build-up between the knurled roller and its shaft. Clean and lubricate shaft. Remove all lubricant from roller surfaces.
	Tape tracks to one side or drags on the support tabs of applying frame	Adjust the tape web alignments
	The one-way tension roller is not correctly positioned	Position the roller in its mounting slot so that the tape extends just beyond the centerline of the applying roller
	Taping head is not set up properly	Check leg length adjustments
The blade does not cut tape or the tape end is jagged or shredded	The blade is dull and/or has broken teeth	Replace the blade
	Tape tension is insufficient	Increase tape tension by adjusting the one-way tension roller
	Adhesive has built up on the blade	Clean and adjust the blade
	The blade is not positioned properly	Make sure the blade is bottomed out against the mounting bolts
	The blade is dry	Lubricate the blade oiler pad on the blade guard
	The blade is in backwards	Mount the blade so that the beveled edge is away from the entrance of the head
	One or both cutter springs are missing or stretched	Replace the defective spring(s)
	Tension roller surface is not fully contacting the taping head frame	Make sure one-way bearing is below the surface of the tension roller. If not, press bearing further into roller or replace roller.

(Continued)

Troubleshooting (Continued)

Troubleshooting Guide

Problem	Cause	Correction
Tape is tabbing on the trailing leg on the back of the box	There is excess tension on the tape drum assembly and/or the one-way tension roller assembly	Adjust the one-way tension roller and/or the tape drum assembly
	Rollers in the tape path do not rotate freely	Clean adhesive deposits from the surface, ends, and shafts of the rollers. Then lubricate roller shafts. Remove all lubricant from roller surfaces.
	The blade is not cutting tape properly	Refer to tape cutting problems
	The tape is threaded incorrectly	Rethread the tape
	Applying mechanism spring has too little tension	Move spring hook to next tighter hole
The tape end does not stay in application position in front of the applying roller	The tape is incorrectly threaded	Rethread the tape
	Flanged knurled roller overruns on return of applying mechanism to its rest position	Adjust tension roller position in mounting slot to lengthen tape leg
	Applying roller overruns on return of applying mechanism to its rest position	There should be a slight drag when rotating the applying roller. If not, check friction springs and/or friction pins and replace if necessary
	The one-way tension roller is not correctly positioned	Position roller in it mounting slot so that tape end extends beyond centerline of applying roller
	The one-way tension roller is defective	Replace the one-way tension roller
Tape not centered on box seam	Tape drum not centered	Reposition tape drum
	Centering guides not centered	Adjust centering guides
	Box flaps not of equal length	Check box specifications

Spare Parts/Service Information

Recommended Spare Parts

A set of spare parts that will periodically require replacement due to normal wear is supplied with the taping heads. The set includes the following which should be reordered when used to keep the taping heads in production:

AccuGlide™ II STD 3 Inch Upper Taping Head

Qty.	Ref. No.	Part Number	Description
4	2948-22	78-8076-4500-3	Stud – Mounting
1	2950-10	78-8070-1274-1	Spring – Upper Extension (Silver)
1	2952-2	78-8028-7899-7	Blade – 89 mm/3.5 Inch
2	2952-12	78-8052-6602-6	Spring – Cutter
1	–	78-8017-9433-6	Tool – Tape Threading

AccuGlide™ II STD 3 Inch Lower Taping Head

Qty.	Ref. No.	Part Number	Description
1	2952-2	78-8028-7899-7	Blade – 89 mm/3.5 Inch
2	2952-12	78-8052-6602-6	Spring – Cutter
4	2952-22	78-8076-4500-3	Stud – Mounting
1	2955-10	78-8070-1273-3	Spring – Lower Extension (Black)
1	–	78-8017-9433-6	Tool – Tape Threading

In addition to the above set of spare parts supplied with the taping head, it is suggested that the following spare parts be maintained which will require replacement under normal wear of the taping head.

Qty.	Ref. No.	Part Number	Description
1	2949-15	78-8057-6181-0	Roller – Applying
1	2952-6	78-8070-1390-5	Spring – Torsion
1	2955-5	78-8057-6180-2	Roller – Buffing

Replacement Parts and Service

Refer to the first page of this instruction manual **"Replacement Parts and Service Information".**

Replacement Parts Illustrations and Parts Lists
AccuGlide II STD 3 Inch Upper Taping Head, Type 29000
AccuGlide II STD 3 Inch Lower Taping Head, Type 29000

1. Refer to **Taping Head Assemblies** Figure, page 19 to find all the parts illustrations identified by **figure numbers.**

2. Refer to the figure or figures to determine the **individual parts** required and the **parts reference number.**

3. The **replacement parts list,** that follows each illustration, includes the **part number** and **part description** for the parts in that illustration.

> **Note** – The complete description has been included for standard fasteners and some commercially available components. This has been done to allow obtaining these standard parts locally, should the customer elect to do so.

4. Order parts by part number, part description and quantity required. Also include machine name, number and type.

5. Refer to the first page of this instruction manual **"Replacement Parts and Service Information"** for replacement parts ordering information.

> **IMPORTANT** – Not all the parts listed are normally stocked items. Some parts or assemblies shown are available only on a special order basis. Contact 3M/Tape Dispenser Parts to confirm item availability.

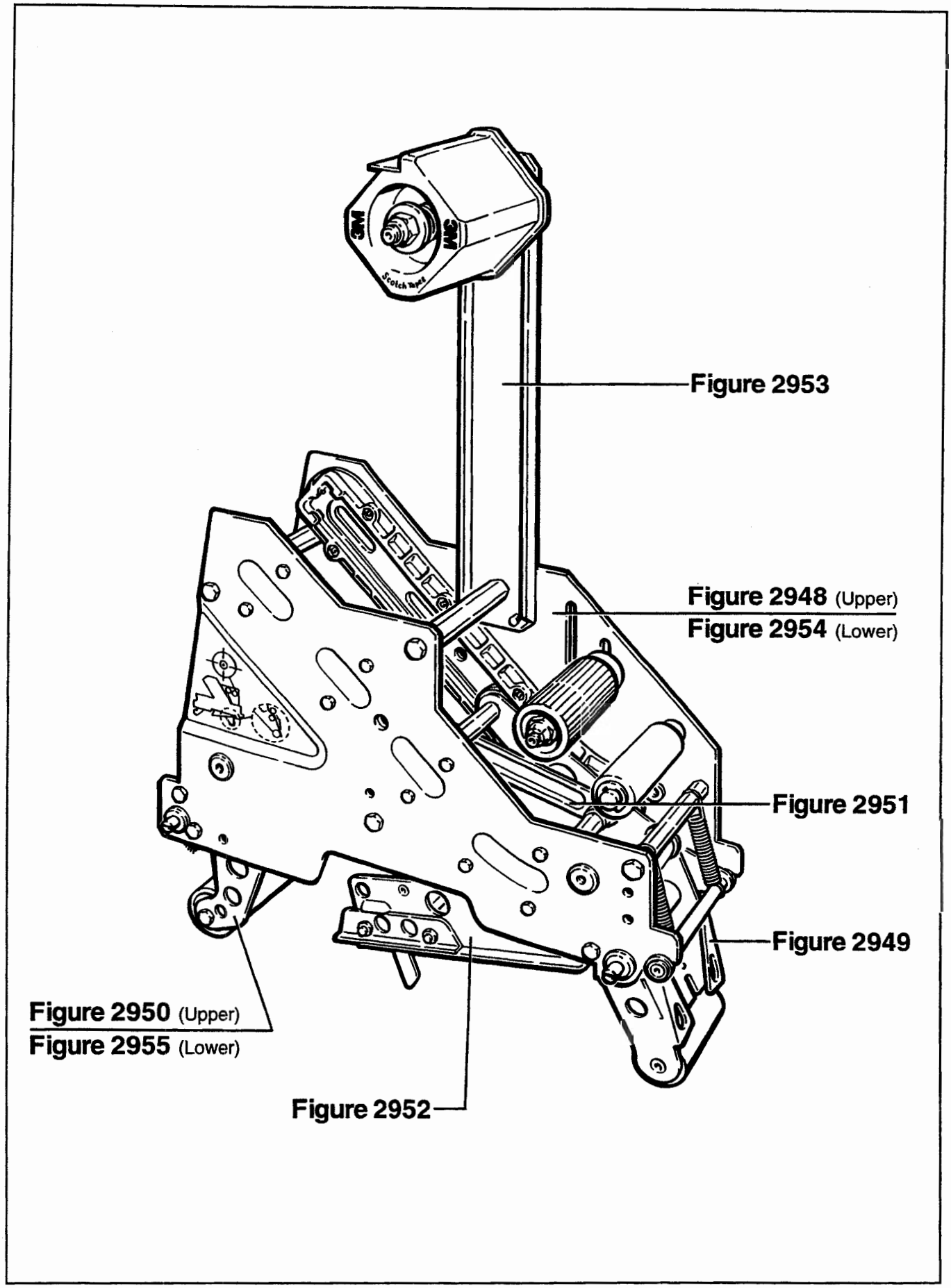

Taping Head Assemblies – AccuGlide™ II STD 3 Inch

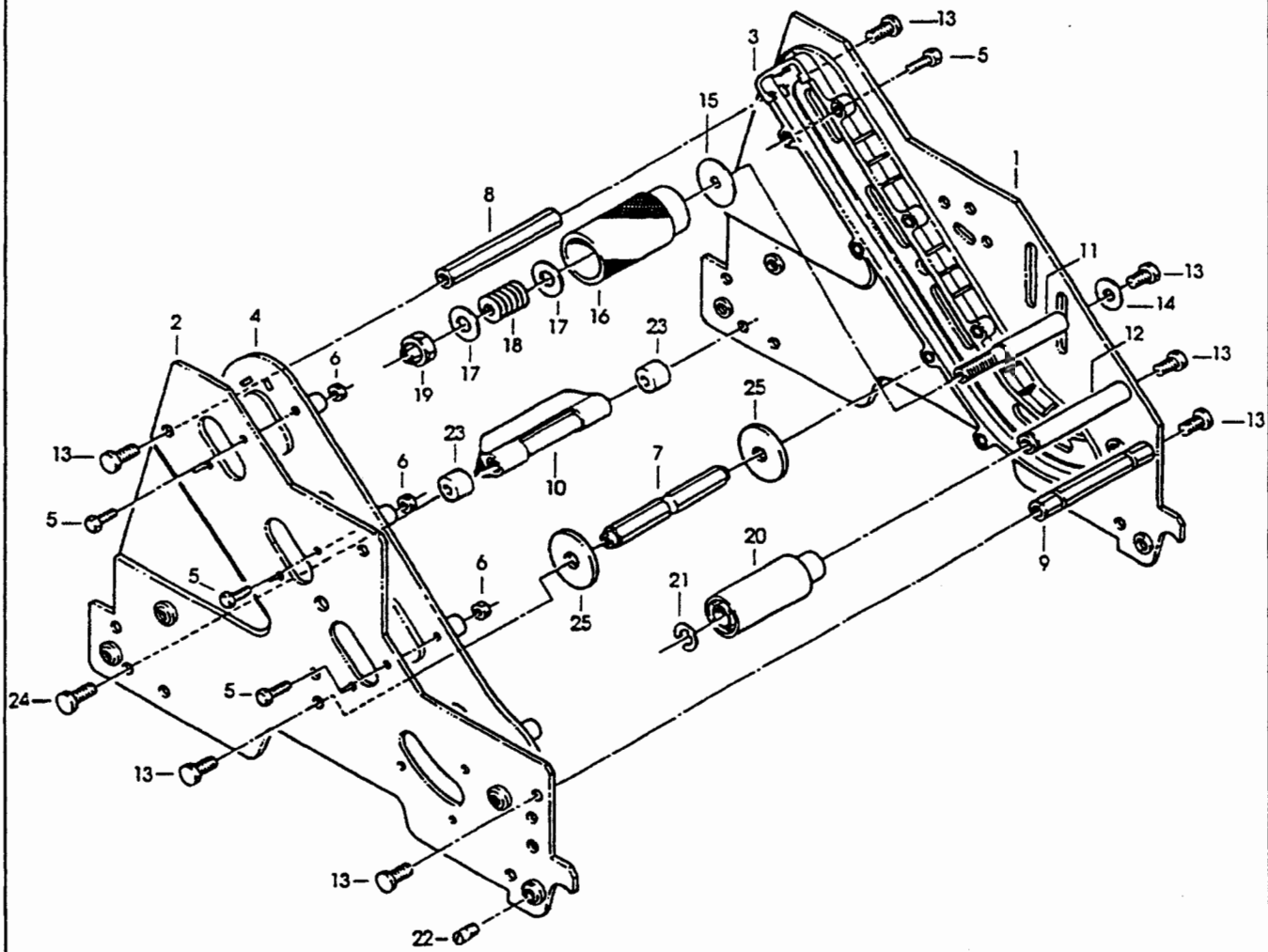

Figure 2948 – Upper Head

Figure 2948 – Upper Head

2948-1	78-8070-1386-3	Frame – Tape Mount Upper Assembly
2948-2	78-8070-1387-1	Frame – Front Upper Assembly
2948-3	78-8068-4143-9	Guide – R/H
2948-4	78-8068-4144-7	Guide – L/H
2948-5	83-0002-7336-3	Screw – Hex Hd, M4 x 14
2948-6	78-8010-7416-8	Nut – Hex M4, Metric
2948-7	78-8076-4735-5	Spacer – L=115
2948-8	78-8054-8793-7	Spacer – Hexagonal
2948-9	78-8060-7939-4	Spacer – 10 x 115, W/Slots
2948-10	78-8060-7936-0	Brush Assembly
2948-11	78-8054-8796-0	Shaft – Tension Roller
2948-12	78-8054-8798-6	Shaft – Wrap Roller
2948-13	26-1003-5829-5	Screw – Hex Hd, M6 x 12
2948-14	78-8042-2919-9	Washer – Triple, M6
2948-15	78-8070-1268-3	Washer – Roll Back Up
2948-16	78-8054-8797-8	Roller – Top Tension
2948-17	78-8052-6566-3	Washer – Friction
2948-18	78-8052-6567-1	Spring – Compression
2948-19	78-8017-9077-1	Nut – Self Locking, M10 x 1
2948-20	78-8054-8799-4	Roller – Wrap
2948-21	26-1000-1613-3	Ring – Retaining, 10DIN6799
2948-22	78-8076-4500-3	Stud – Mounting
2948-23	78-8060-7937-8	Spacer – /6,5/14 x 12,5
2948-24	78-8060-7938-6	Screw – Special, M6 x 25
2948-25	78-8076-5242-1	Stop – Cut-Off Frame

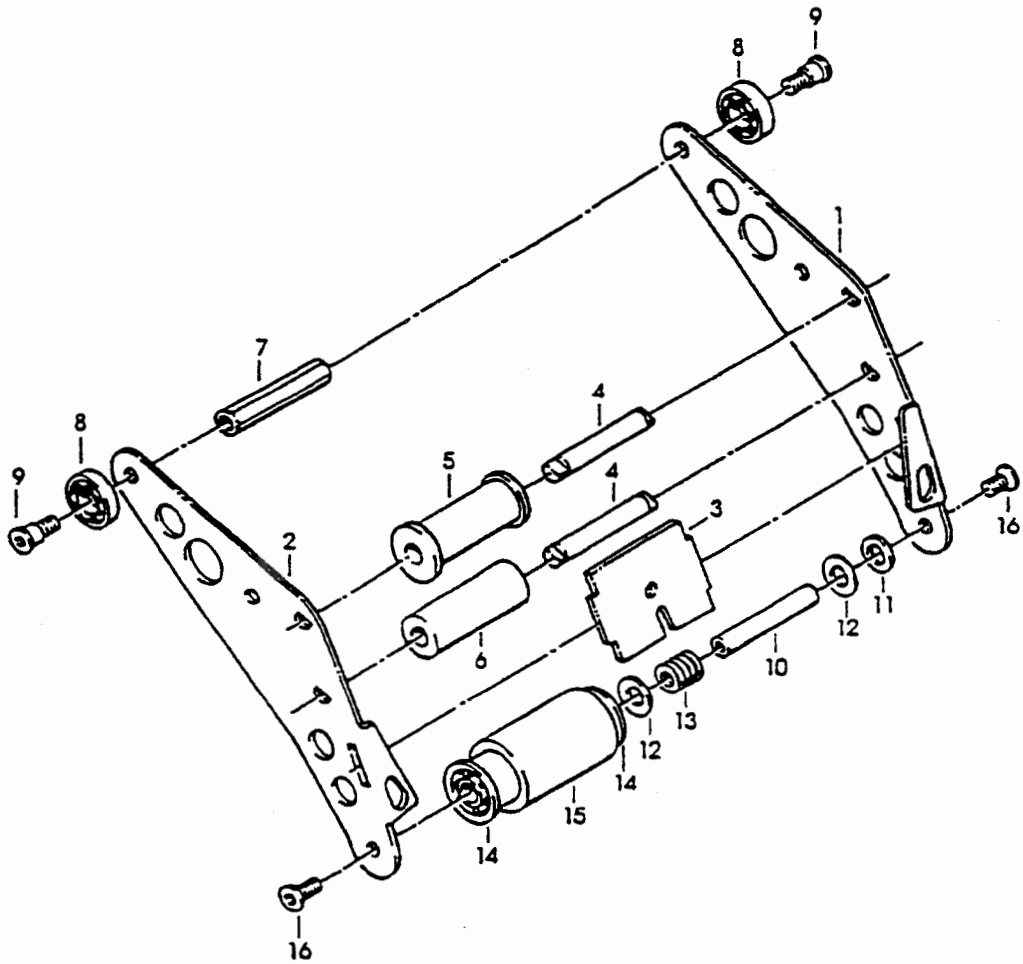

Figure 2949 – Upper and Lower Heads

Figure 2949 – Upper and Lower Heads

Ref. No.	3M Part No.	Description
2949-1	78-8070-1278-2	Applying Arm – Left
2949-2	78-8070-1279-0	Applying Arm – Right
2949-3	78-8070-1292-3	Plate – Back up
2949-4	78-8076-4736-3	Shaft – Roller
2949-5	78-8076-4737-1	Roller Assembly – Knurled
2949-6	78-8076-4738-9	Roller – Wrap
2949-7	78-8054-8806-7	Spacer
2949-8	78-8017-9082-1	Bearing – Special 30 mm
2949-9	78-8017-9106-8	Screw – Bearing Shoulder
2949-10	78-8091-0799-4	Shaft – Roller
2949-11	78-8017-9074-8	Washer – Nylon 15 mm
2949-12	78-8052-6566-3	Washer – Friction
2949-13	78-8052-6567-1	Spring – Compression
2949-14	78-8060-8396-6	Bushing – Applying Roller
2949-15	78-8057-6181-0	Roller – Applying NM
2949-16	26-1005-4759-0	Screw – Flat Hd, M6 x 12

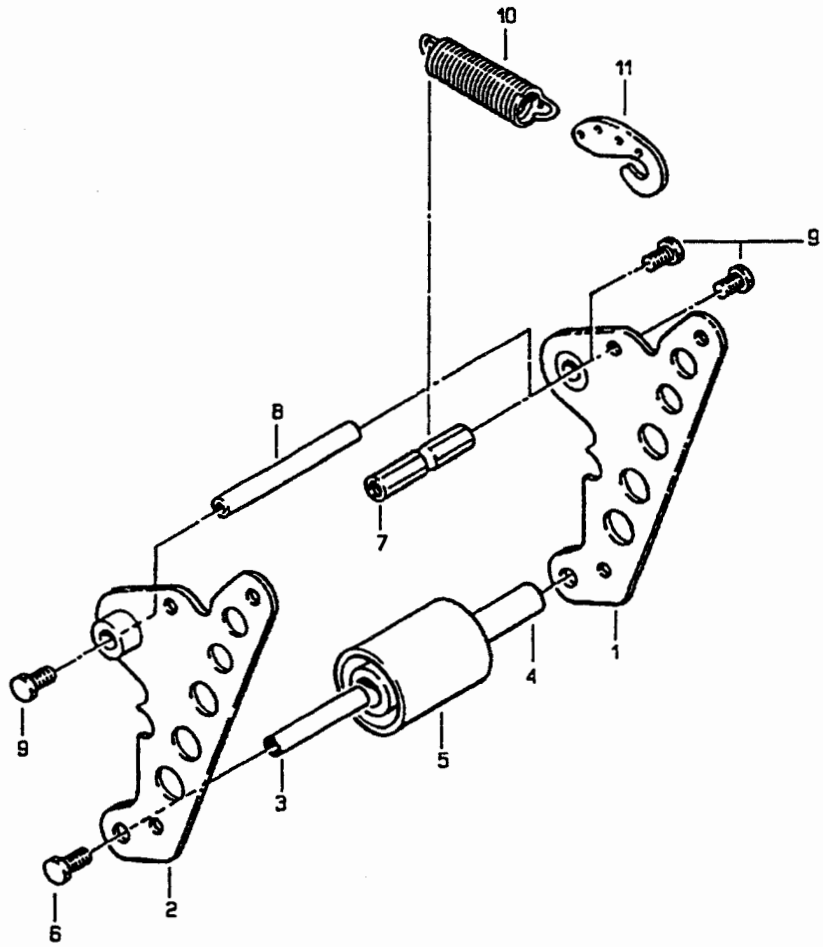

Figure 2950 – Upper Head

Figure 2950 – Upper Head

Ref. No.	3M Part No.	Description
2950-1	78-8070-1392-1	Buffing Arm – Sub Assembly
2950-2	78-8070-1391-3	Buffing Arm – Sub Assembly
2950-3	78-8091-0799-4	Shaft – Roller
2950-4	78-8054-8807-5	Bushing – Buffing Roller
2950-5	78-8057-6180-2	Roller – Buffing NM
2950-6	26-1003-5828-7	Screw – Hex Hd, M6 x 12
2950-7	78-8076-4739-7	Spacer – Spring
2950-8	78-8028-7885-6	Shaft – 10 x 115 mm
2950-9	26-1003-5829-5	Screw – Hex Hd, M6 x 12
2950-10	78-8070-1274-1	Spring – Upper (Silver)
2950-11	78-8070-1244-4	Holder – Spring

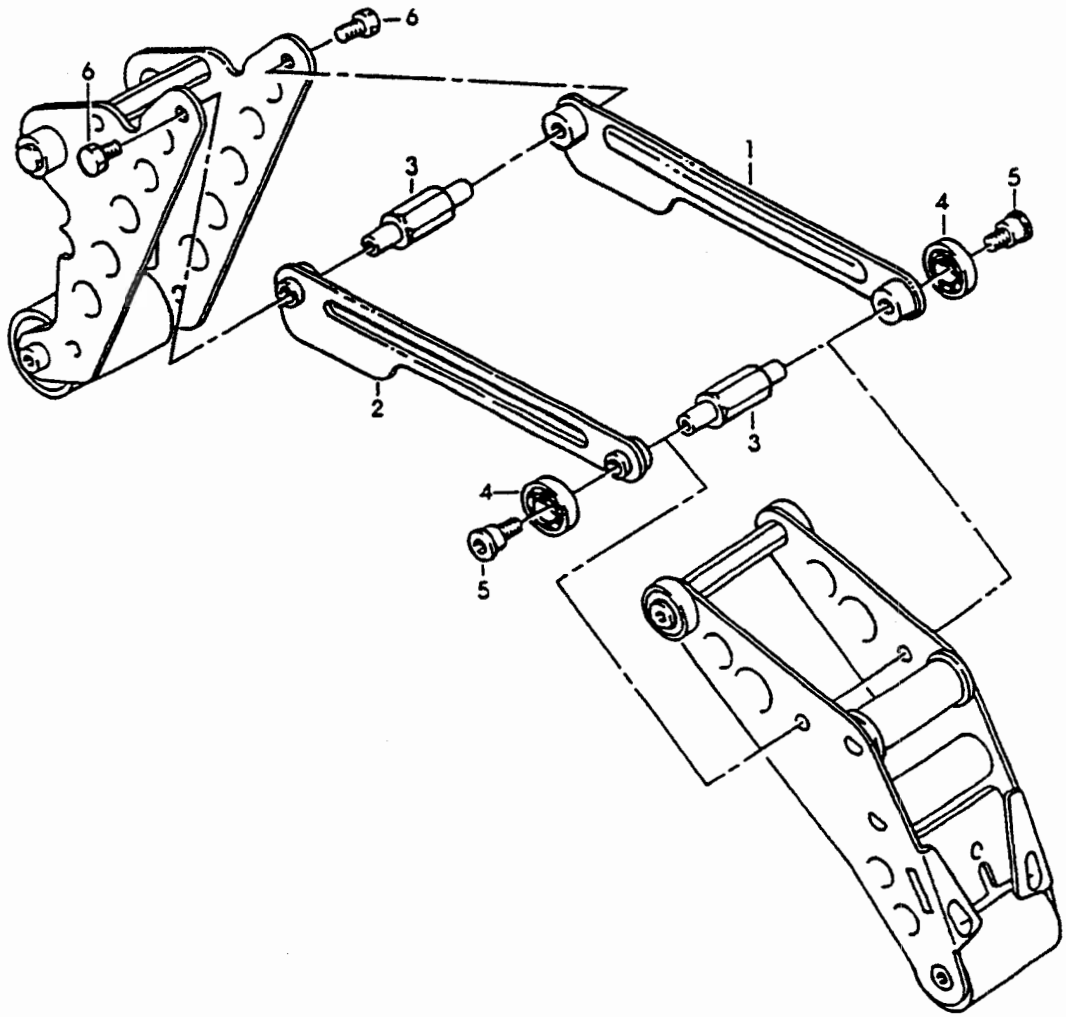

Figure 2951 – Upper and Lower Heads

Figure 2951 – Upper and Lower Heads

Ref. No.	3M Part No.	Description
2951-1	78-8070-1388-9	Link – Arm Bushing Assembly
2951-2	78-8070-1389-7	Link – Arm Bushing Assembly
2951-3	78-8076-4740-5	Shaft – Pivot
2951-4	78-8017-9082-1	Bearing – Special, 30 mm
2951-5	78-8017-9106-8	Screw – Bearing Shoulder
2951-6	26-1003-5828-7	Screw – Hex Hd, M6 x 10

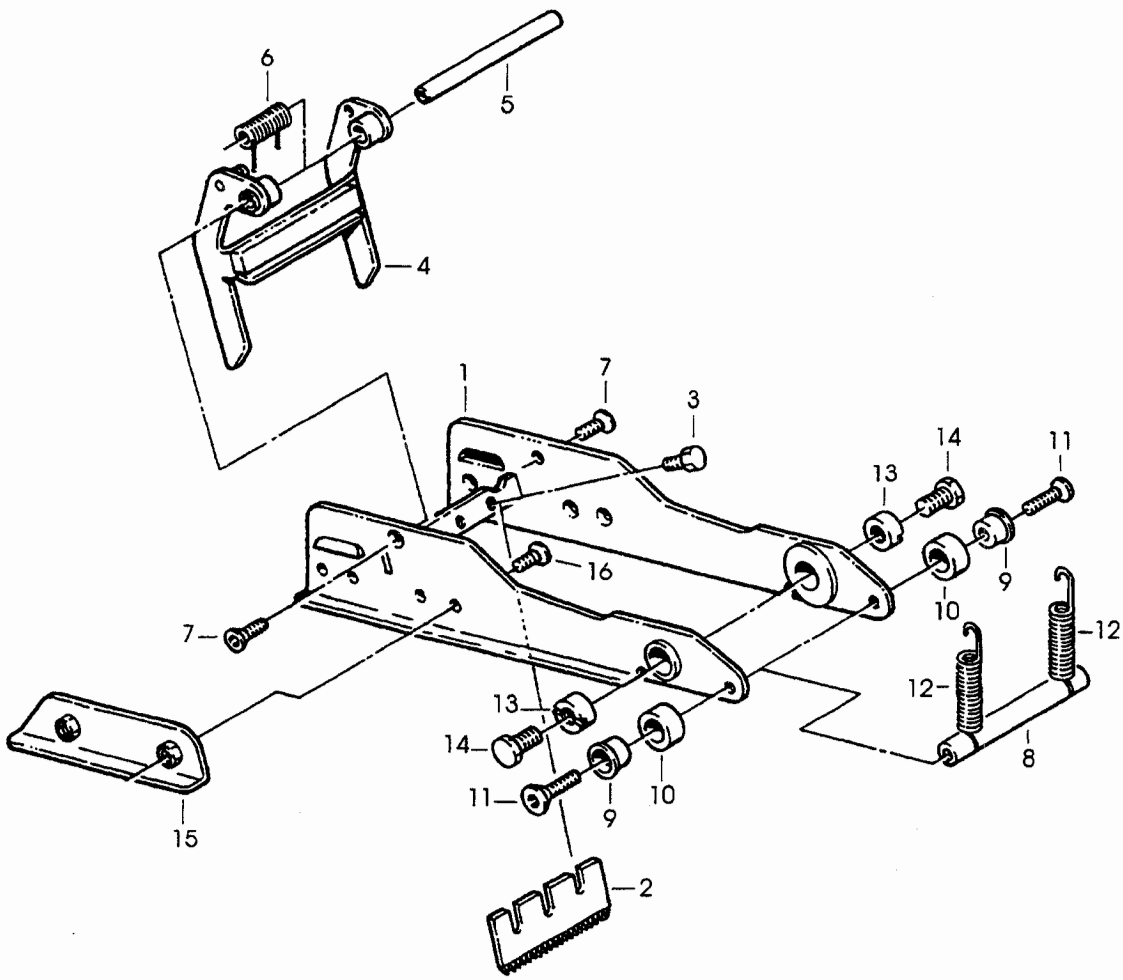

Figure 2952 – Upper and Lower Heads

Figure 2952 – Upper and Lower Heads

Ref. No.	3M Part No.	Description
2952-1	78-8070-1283-2	Frame – Cut-Off
2952-2	78-8028-7899-7	Blade – 89 mm/3.5 Inch
2952-3	26-1002-5817-2	Screw – Hex Hd, M5 x 8
2952-4	78-8076-4741-3	Guard – Blade Assembly
2952-5	78-8054-8813-3	Shaft – Blade Guard
2952-6	78-8070-1390-5	Spring – Torsion
2952-7	26-1005-4758-2	Screw – Flat Hd, Soc Dr, M4 x 10
2952-8	78-8060-7941-0	Pin – Spring Holder, W/Slots
2952-9	78-8052-6600-0	Spacer
2952-10	78-8070-1269-1	Bumper
2952-11	26-1005-4757-4	Screw – Flat Hd, Soc Dr, M5 x 20
2952-12	78-8052-6602-6	Spring – Cutter
2952-13	78-8017-9132-4	Pivot – Cutter Lever
2952-14	26-1003-5828-7	Screw – Special, Hex Hd, M6 x 10
2952-15	78-8070-1216-2	Slide – Extension
2952-16	26-1008-6574-5	Screw – Flat Hd, Phil Dr, M4 x 10

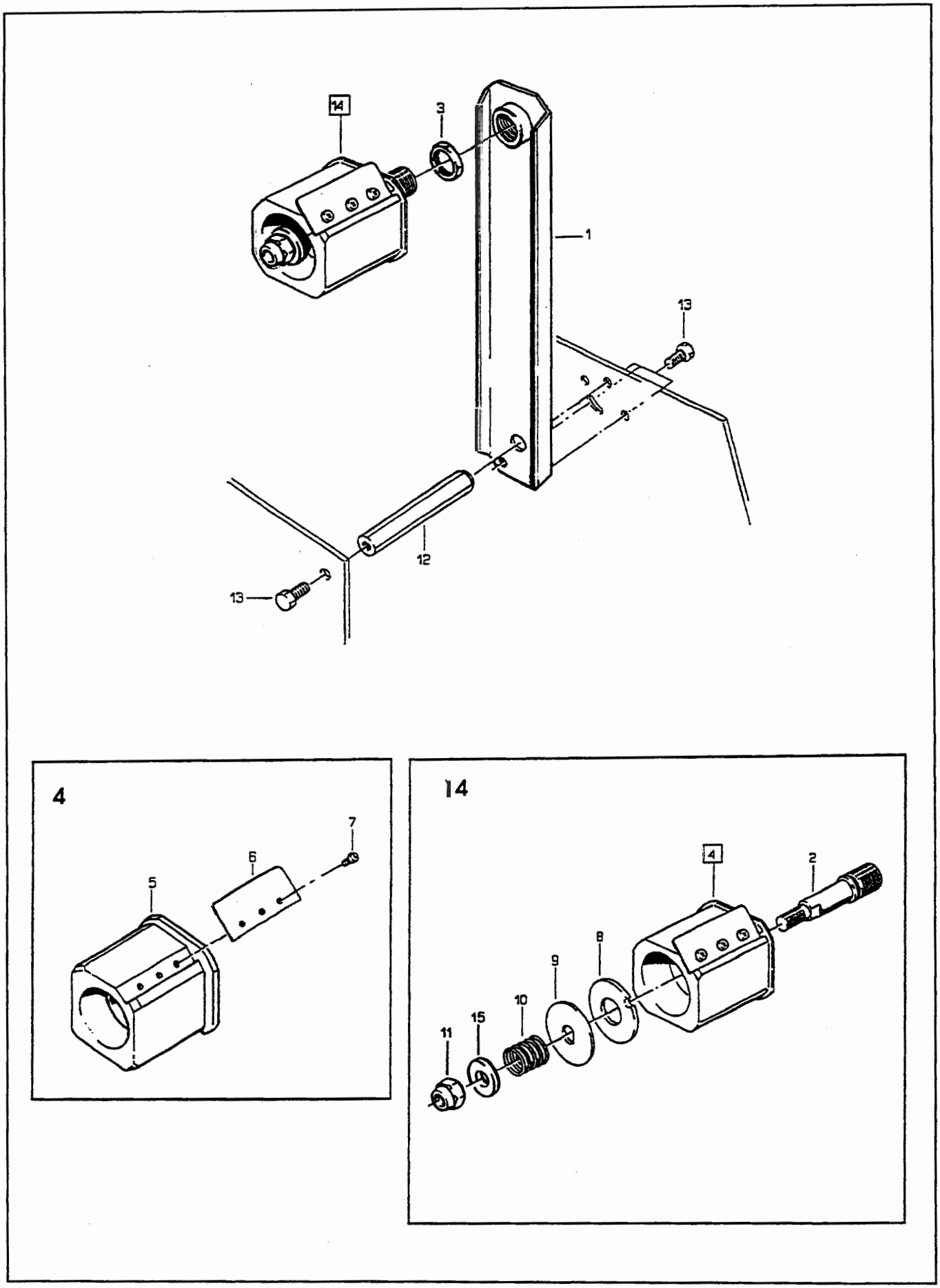

Figure 2953 – Upper and Lower Heads

Figure 2953 – Upper and Lower Heads

Ref. No.	3M Part No.	Description
2953-1	78-8070-1395-4	Bracket – Bushing Assembly
2953-2	78-8060-8462-6	Shaft – Tape Drum, 72 mm Head
2953-3	78-8017-9169-6	Nut – M18 x 1
2953-4	78-8076-4731-4	Tape Drum Sub Assembly
2953-5	78-8054-8815-8	Tape Drum
2953-6	78-8054-8816-6	Leaf Spring
2953-7	26-1002-5753-9	Screw – Self Tapping
2953-8	78-8060-8172-1	Washer – Friction
2953-9	78-8052-6271-0	Washer – Tape Drum
2953-10	78-8054-8826-5	Spring
2953-11	78-8017-9077-1	Nut – Self Locking, M10 x 1
2953-12	78-8076-4742-1	Spacer – Tape Drum Bracket
2953-13	26-1003-5829-5	Screw – Hex Hd, M6 x 12
2953-14	78-8076-4732-2	Tape Drum Assembly
2953-15	26-1004-5510-9	Washer – Plain, M10

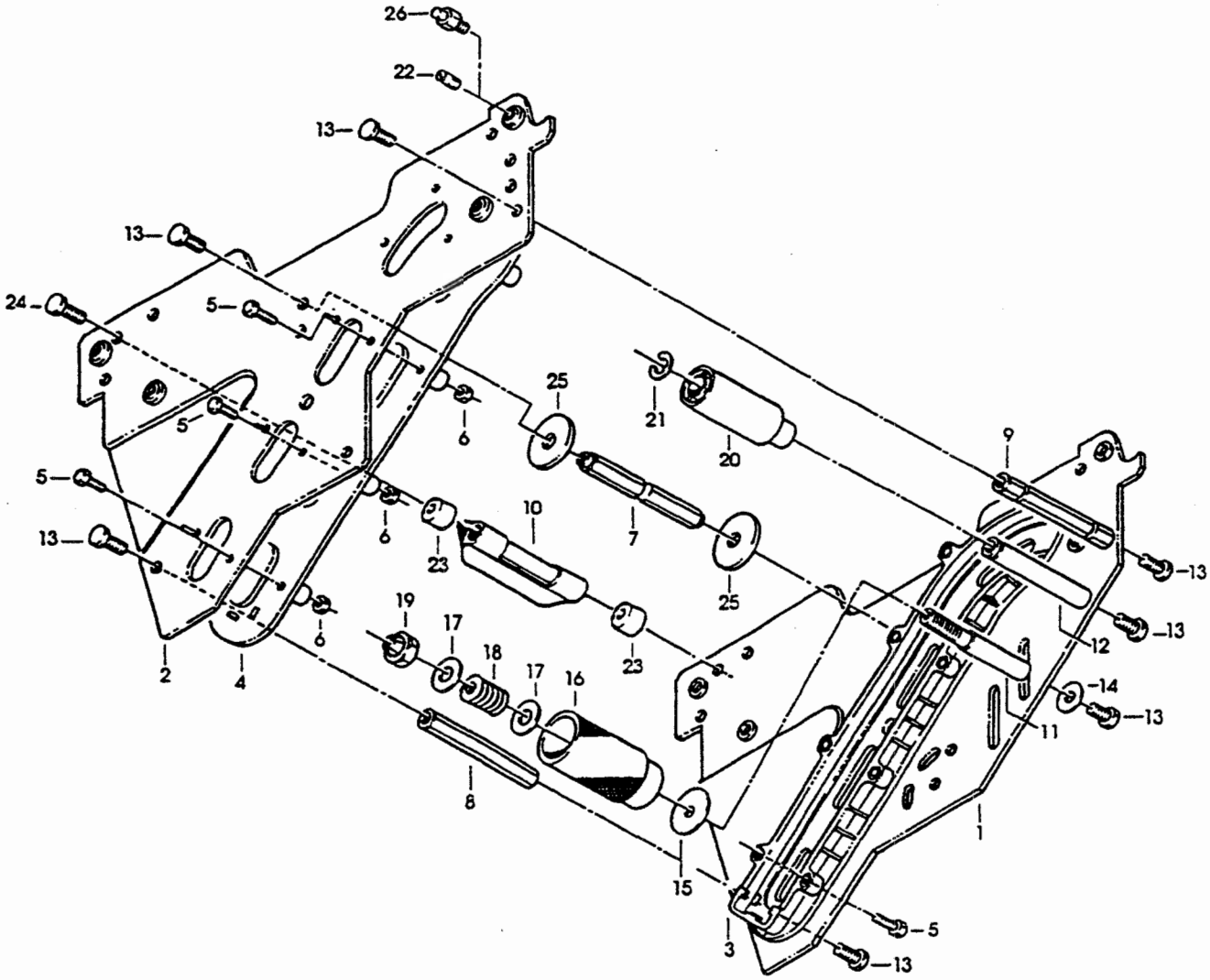

Figure 2954 – Lower Head

Figure 2954 – Lower Head

Ref. No.	3M Part No.	Description
2954-1	78-8070-1369-9	Frame – Tape Mount Lower Assembly
2954-2	78-8070-1370-7	Frame – Front Lower Assembly
2954-3	78-8068-4144-7	Guide – #2
2954-4	78-8068-4143-9	Guide – #1
2954-5	83-0002-7336-3	Screw – Hex Hd, M4 x 14
2954-6	78-8010-7416-8	Nut – Hex, M4
2954-7	78-8076-4735-5	Spacer – Spring
2954-8	78-8054-8793-7	Spacer – Hexagonal
2954-9	78-8060-7939-4	Spacer – 10 x 115, W/Slots
2954-10	78-8060-7936-0	Brush Assembly
2954-11	78-8054-8796-0	Shaft – Tension Roller
2954-12	78-8054-8798-6	Shaft – Wrap Roller
2954-13	26-1003-5829-5	Screw – Hex Hd, M6 x 12
2954-14	78-8042-2919-9	Washer – Triple, M6
2954-15	78-8070-1268-3	Washer – Roll Back Up
2954-16	78-8054-8817-4	Roller – Tension Bottom
2954-17	78-8052-6566-3	Washer – Friction
2954-18	78-8052-6567-1	Spring – Compression
2954-19	78-8017-9077-1	Nut – Self Locking, M10 x 1
2954-20	78-8054-8799-4	Roller – Wrap
2954-21	26-1000-1613-3	Ring – Retaining, Tru-Arc #1-420-0120-100
2954-22	78-8076-4500-3	Stud – Mounting
2954-23	78-8060-7937-8	Spacer – /6.5 x 14 x 12.5
2954-24	78-8060-7938-6	Screw – Special, M6 x 25
2954-25	78-8076-5242-1	Stop – Cut-Off Frame

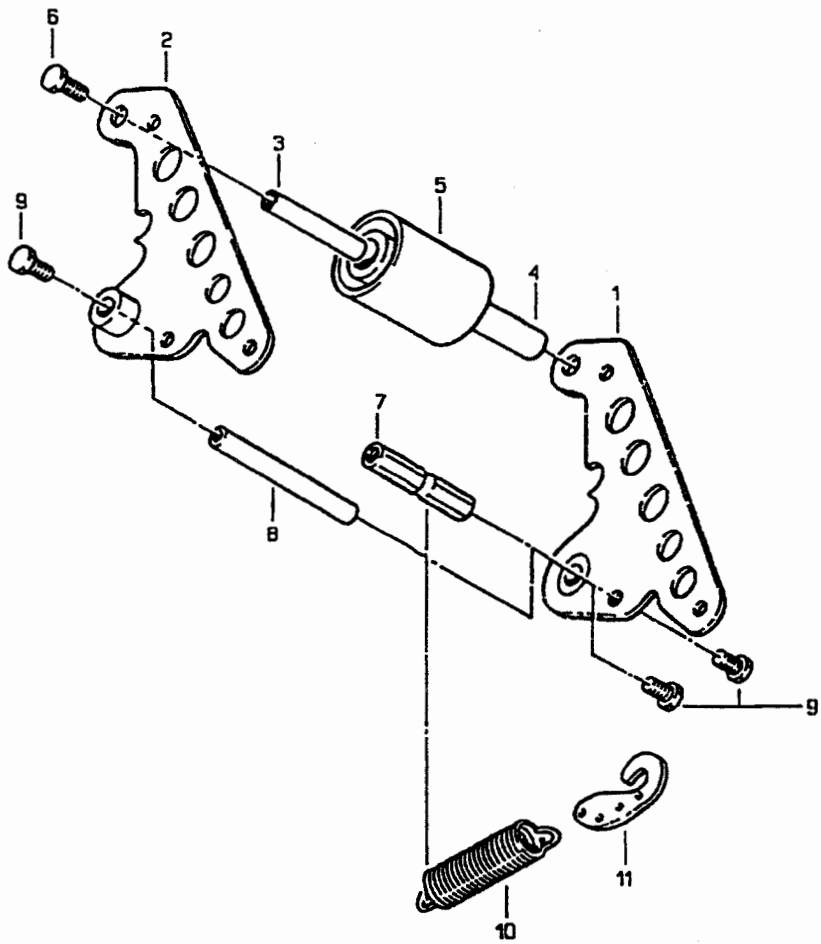

Figure 2955 – Lower Head

Figure 2955 – Lower Head

Ref. No.	3M Part No.	Description
2955-1	78-8070-1391-3	Buffing Arm Sub Assembly
2955-2	78-8070-1392-1	Buffing Arm Sub Assembly
2955-3	78-8091-0799-4	Shaft – Roller
2955-4	78-8054-8807-5	Bushing – Buffing Roller
2955-5	78-8057-6180-2	Roller – Buffing
2955-6	26-1003-5828-7	Screw – Hex Hd, M6 x 12
2955-7	78-8076-4739-7	Spacer – Spring
2955-8	78-8028-7885-6	Shaft – 10 x 115 mm
2955-9	26-1003-5829-5	Screw – Hex Hd, M6 x 12
2955-10	78-8070-1273-3	Spring – Lower (Black)
2955-11	78-8070-1244-4	Holder – Spring