Instructions and Parts List

Scotch® BRAND

3M-Matic 7A Adjustable Case Sealer

Model 37900

IMPORTANT

It is recommended you immediately order the spare parts listed on page 23. These parts are expected to wear through normal use, and should be kept on hand to minimize production delays.

34-7004-7273-0B(53.03)R1

Litho in U.S.A.

Packaging Systems Division/3M
220-8W 3M Center
St. Paul, MN 55144

3M

To Our Customers:

This is the "3M-Matic"/"AccuGlide"/"Scotch"/"Opta-Pak" brand Equipment you ordered. It has been set up and tested in the factory with "Scotch" Brand tapes. If any problems occur when operating this equipment, and you desire a service call, or phone consultation, call the 3M National Service Center on 1-800/328 1390 (Twin Cities Metro Area call 731 6507). Please provide the customer support coordinator with the machine number and serial number. If you have a technical question that does not require an immediate response, you may Fax it to 612/731 6650.

Replacement Parts

Order parts by **part number, part name,** quantity required, **machine name, number** and **type number.**

Replacement parts and parts prices available from:

Dispenser Parts
Route 4, Box 5B
Amery, WI 54001

715/268 8126 (WI)
800/344 9883 (Outside WI)
FAX# 715/268 8153

34-7004-7364-7(H21.25)R2 XY

Litho in U.S.A.

3M Packaging Systems Division

3M Center Bldg. 220-8W-01
St. Paul, MN 55144-1000

INSTRUCTION MANUAL
7A ADJUSTABLE CASE SEALER
MODEL 37900

TABLE OF CONTENT

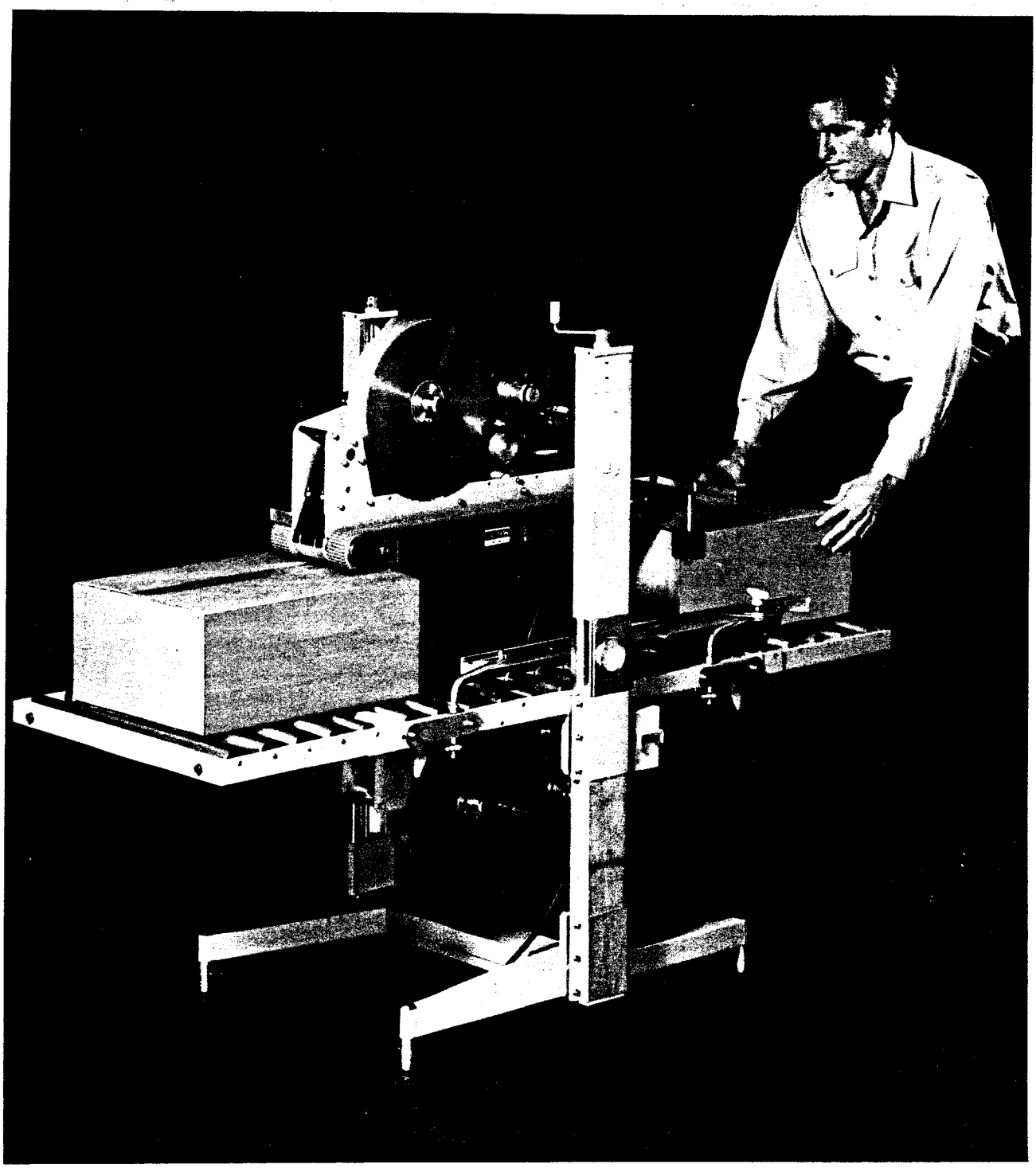

7A ADJUSTABLE CASE SEALER - MODEL 37900

DESCRIPTION

The 7A Adjustable Case Sealer is designed to apply a "C" clip of pressure-sensitive tape to the top and bottom center seam of regular slotted containers. The machine is manually adjustable to a wide range of box sizes (see box size specifications).

RECEIVING AND HANDLING

After the machine has been uncrated, examine the Case Sealer for damage that might have occurred during transit. If damage is evident, file a damage claim immediately with the transportation company and also your 3M Representative.

Spare parts, tools, and oil can are provided in a small plastic case. Remove and keep with Case Sealer for use in set-up, operation, and maintenance.

Several machine components are tied down to prevent damage during transit. Remove these ties before proceeding with following set-up instructions.

WARRANTY

IMPORTANT NOTICE TO PURCHASER: The following is made in lieu of all warranties, expressed or implied, including the implied warranties of merchantability and fitness for purpose; The only obligation of the seller and manufacturer of "SCOTCH" Brand equipment shall be to repair or replace any mechanical part proved to be defective, provided the defect occurs within 90 days after date of purchase, and the so-purchased item is returned immediately to the 3M factory or to an authorized service station designated by the manufacturer. NEITHER SELLER NOR MANUFACTURER SHALL BE LIABLE EITHER IN TORT OR IN CONTRACT FOR ANY LOSS OR DAMAGE, DIRECT, INCIDENTAL, OR CONSEQUENTIAL, ARISING OUT OF THE USE OF OR THE INABILITY TO USE THE "SCOTCH" BRAND EQUIPMENT. No statement or recommendation not contained herein shall have any force or effect unless in an agreement signed by officers of seller and manufacturer.

"SCOTCH", "SCOTCHPAR" and "SCOTCHPRO" are registered trademarks for the pressure-sensitive tapes and dispensers of 3M, St. Paul, Minnesota 55144.

SPECIFICATIONS

1) Tape:

"SCOTCH" Brand Pressure-sensitive Film Box Sealing tapes.

2) Tape Width:

1-1/2 inches or 36 mm minimum to 2 inches [50 mm] maximum.

3) Tape Roll Diameter:

Up to 14 inches [355 mm] maximum on a 3 inch [76.2 mm] diameter core. (Accommodates "SCOTCH" Brand Film tapes - 1,000 yard rolls.)

4) Box Board:

125 to 275 P.S.I. bursting test, single wall A, B, or C flute.

(Specifications continued on next page.)

5) Box Weight and Size Capacities:

A. Box weight, filled - up to 65 pounds [30 kg]

B. Box size:

		MINIMUM	MAXIMUM
Length	-	6.0 inches or 150 mm	unlimited
Width	-	5.2 inches or 130 mm	*21 inches or 530 mm
Height	-	†5.2 inches or 130 mm	§20 inches or 500 mm

* Maximum width for box heights less than 8 inches or 200 mm is 19.2 inches or 490 mm as discussed on page 16.

† Minimum box height of 4 inches or 100 mm can be attained by removing knife guards and reducing height of top taping head bumpers as discussed on page 16.

§ Maximum box height of 26 inches or 660 mm can be attained by using Auxiliary Tape Roll Mount Attachment, P/N 78-8017-9417-9, on bottom taping head and lowering roller conveyor bed as discussed on page 8.

NOTE: The Case Sealer can accommodate most boxes within the size range listed above. However, if the box length (in direction of seal) to box height ratio is .5 or less, then several boxes should be test run to assure proper machine performance.

DETERMINE THE BOX LIMITATIONS BY COMPLETING THIS FORMULA:

$$\frac{\text{BOX LENGTH IN DIRECTION OF SEAL}}{\text{BOX HEIGHT}} \quad \text{MUST BE GREATER THAN .5}$$

Any box ratio approaching this limitation should be test run to assure performance.

6) Operating Rate:

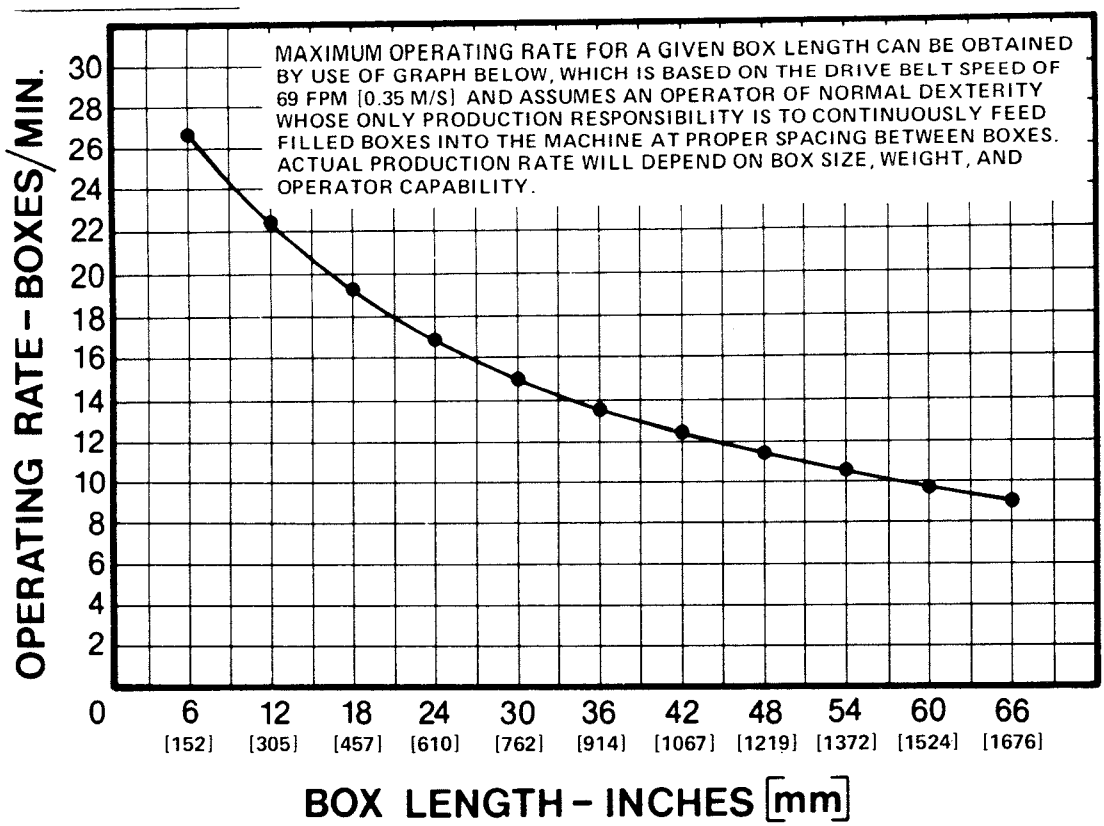

7) Power Requirements:

115 VAC, 60 Hz, 5 A electrical power. The machine is equipped with a standard neoprene covered power cord and a grounded plug.

8) Operating Conditions:

Use in dry, relatively clean environments at 40° to 120° F [5° to 49° C] with clean, dry boxes.

Machine should not be washed down or subjected to conditions causing moisture condensation on components.

9) Machine Dimensions:

		Overall Dimensions	For Shipping Purposes
A.	Length	- 65.9 inches [1.675 m]	35.5 inches [0.905 m]
B.	Width	- 29.1 inches [0.740 m]	
C.	Height	- 50.2 inches [1.275 m]	49.8 inches [1.265 m]
D.	Conveyor Height	- Adjustable up and down from factory set height of 24.6 inches [625 m]	
E.	Weight	- 291 pounds [132 kg] uncrated 357 pounds [162 kg] crated	

10) Box Height Capacity As Affected By Conveyor Bed Height

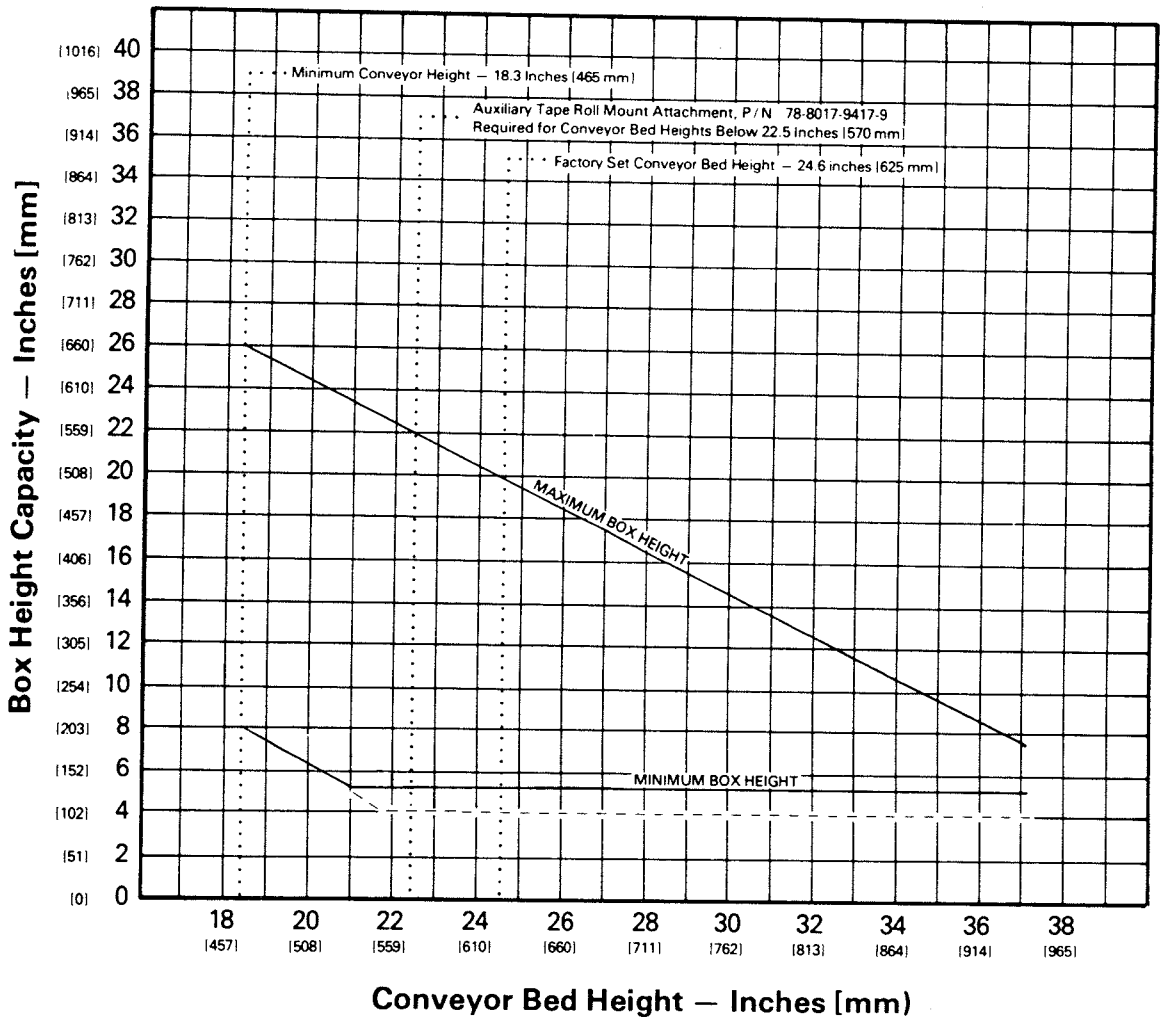

– – – – Minimum Box Height with Knife Guards Removed and Top Taping Head Bumpers Reduced 1.2 Inches (30 mm) in Height.

SET-UP INSTRUCTIONS

It is recommended that the Case Sealer be set-up and tried before placing it in the production line. This approach will allow your thorough review and familiarization with the unit before subjecting it and operating personnel to a production situation where time for set-up, adjustments, and operator training usually becomes limited.

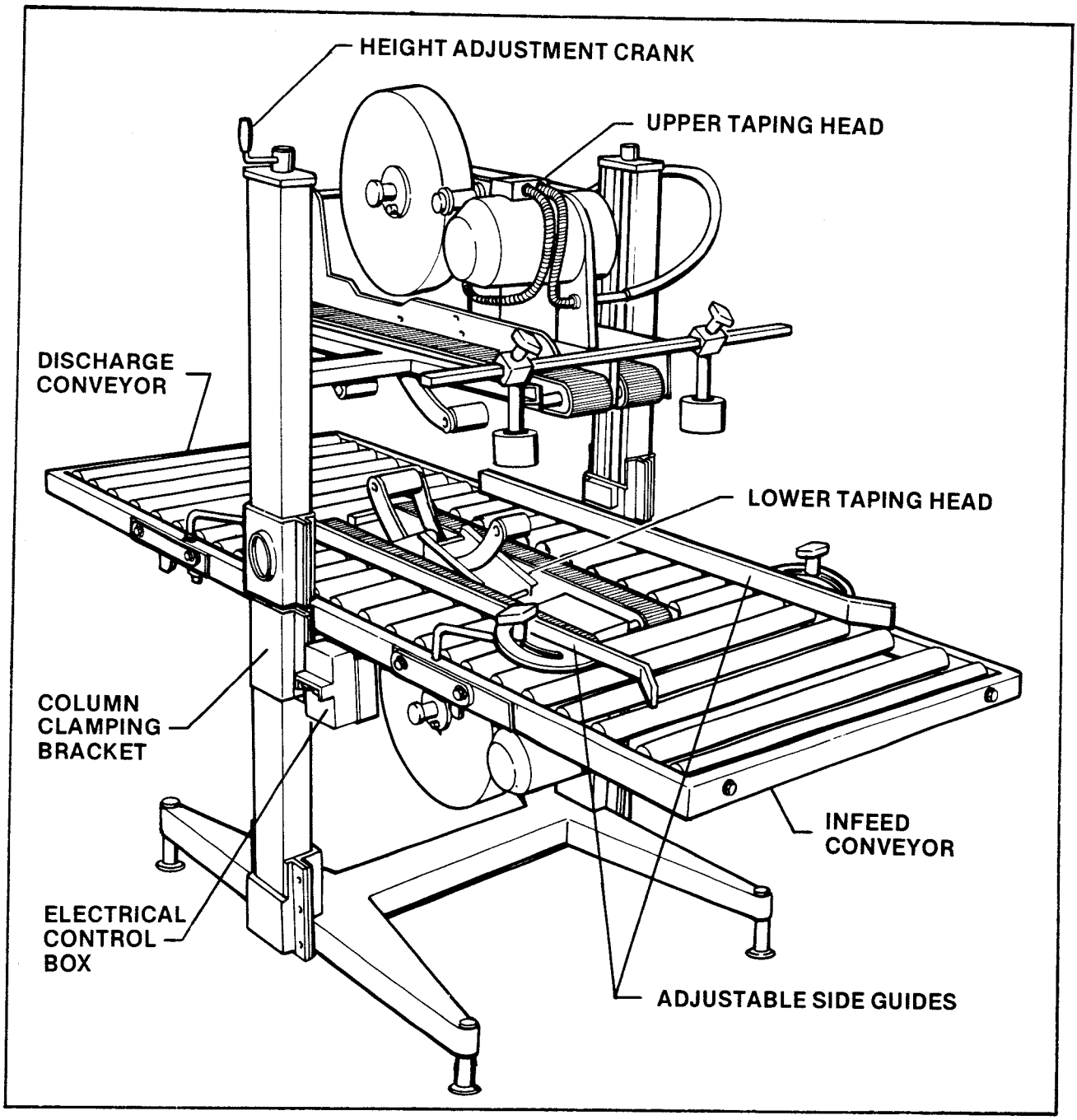

FIGURE 1 SET-UP INSTRUCTIONS - CASE SEALER COMPONENTS - LEFT FRONT VIEW

The following instructions are presented in the order recommended for setting up and installing the Case Sealer, as well as for learning the operating functions. Following them step by step will result in your thorough understanding of the machine and an installation in your production line that best utilizes the many features built into the Case Sealer.

HEIGHT ADJUSTMENT CRANK

The height adjustment crank handle, located as shown in figure 1, comes assembled in a down position for shipping purposes. The crank handle can be assembled to the top of either frame column for customer operating convenience. To put the handle into operating position, loosen but do not remove the locking screw and rotate the handle to the up position as shown in figure 1. Tighten the locking screw on the flat of the shaft to secure the handle.

INFEED AND DISCHARGE CONVEYORS

The infeed and discharge conveyors are folded down for shipping purposes and using figure 2 as a guide, should be erected as follows:

1) Infeed Conveyor - Loosen but do not remove the two M8 X 20 socket head screws on each side of the conveyor frame. The infeed conveyor can then be pivoted upwards, the slotted brackets inserted under the heads of the inside screws, and held in place by tightening screws.

2) Discharge Conveyor - erect the discharge conveyor the same as the infeed conveyor described above.

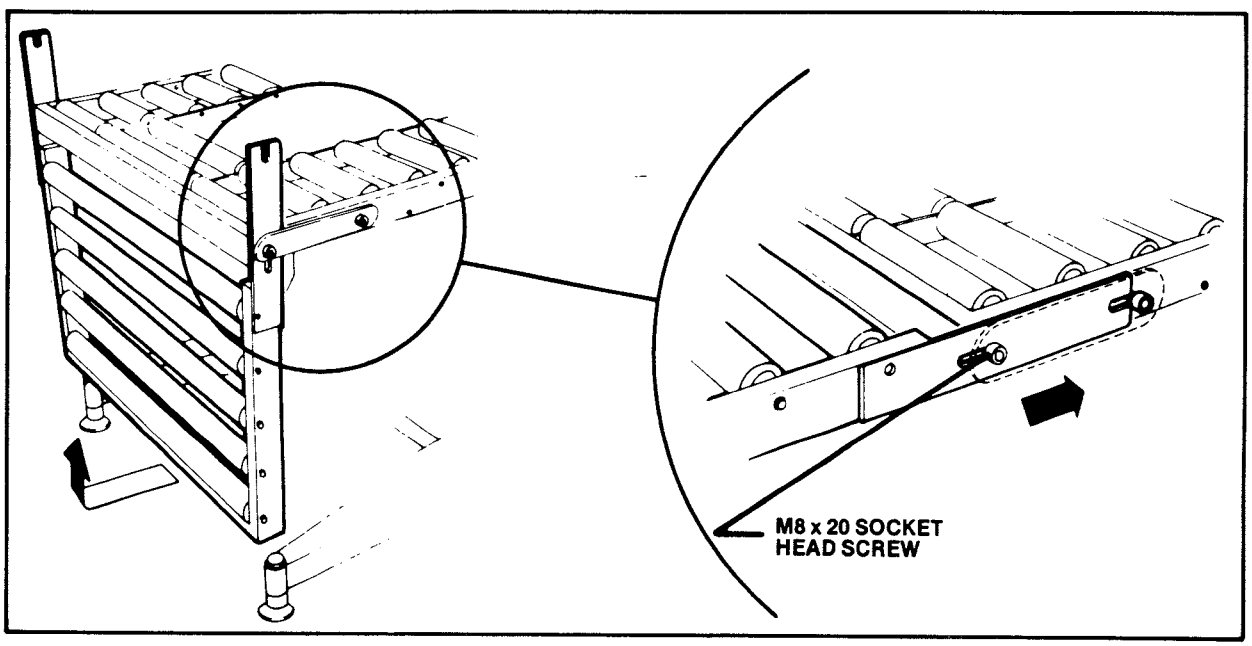

FIGURE 2 - INFEED CONVEYOR ASSEMBLY

Conveyor Bed Height

The conveyor bed height can be adjusted up and down on the two vertical frame columns to match production line conveyor heights, to present the boxes at a comfortable level for the operator, or to provide additional box height capacity. The adjustment is made as follows, but before proceeding, review the affect on box height capacity comments immediately following the adjustment description (refer to Figure 1):

1) To work on conveyor bed height, raise top taping head to fully raised position by means of height adjustment crank.
2) Utilizing two additional personnel or blocking up main conveyor bed to prevent it from dropping, loosen the six M6 X 20 socket head screws of the column clamping bracket on each side of the conveyor bed with hex socket wrench provided in the tool kit. Loosen only enough to allow movement of the conveyor bed up and down on the frame columns.
3) Raise or lower conveyor bed to desired height and measure on each side to insure that both sides have been raised or lowered equally. Measurements should be made from the top of the machine base to the conveyor bed rather than from the floor.
4) Securely tighten the column clamping brackets against the frame columns by tightening the M6 x 20 socket head screws. Recheck measurements to be sure that each side of conveyor frame is equal distance from the machine base.
5) Top taping head can then be lowered for box height being sealed.

BOX HEIGHT CAPACITY (as affected by Conveyor Bed Height)

The conveyor bed height discussed above also affects the box height capacity of the Case Sealer since the conveyor bed is being adjusted in relationship to the top taping head adjustment range as well as the base. Before making any adjustments of the conveyor bed height, review the box heights to be sealed and determine how the conveyor bed height will affect the capacity of the Box Sealer, by means of the specification chart on page 5, so the Box Sealer can be properly set-up for your Case sealing application:

1) As shown by the chart, if the conveyor bed is lowered more than 2 inches [50 mm], the maximum tape roll diameter capacity for the bottom taping head is reduced. Therefore, the Auxiliary Tape Roll Mount Attachment, P/N 78-8017-9417-9, described in attachments section of manual should be used to reposition the tape roll. With this attachment, the conveyor bed can be lowered to a height of 18.3 inches [465 mm] to provide a maximum box height capacity of 26 inches [660 mm].

2) Also, if the conveyor bed height adjustments, necessary to provide the box height capacity required, makes it impossible to utilize the adjustment to match production line conveyor heights, it is recommended that the operation conveyor bed height be established by placing the Case Sealer on a pedestal.

MACHINE LEVELING

The base is equipped with four leveling pad feet, as shown in figure 6, which can be used to level the machine or to adjust to an uneven floor once it is placed in the production line. Each foot is adjustable as follows:

1) Loosen by 1/4 turn the M6 X 10 socket head lock screw with hex socket wrench provided in tool kit.

2) Using same wrench inserted in hex socket in the top of the foot assembly, the foot pad can be extended by turning the wrench counter-clockwise, retracted by turning the wrench clockwise. The maximum extension of the foot pad is 1 inch [25 mm].

3) After adjusting pad extension to level machine, lock in place by tightening M6 X 10 socket head lock screw.

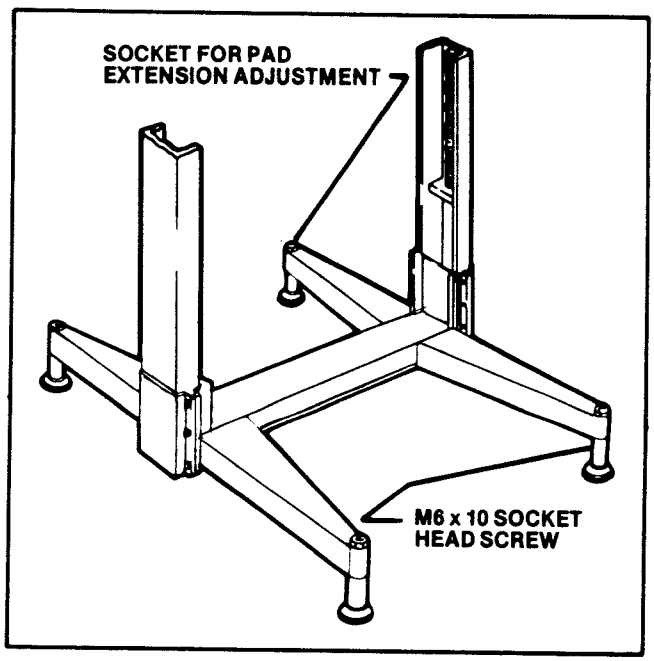

FIGURE 6 - MACHINE LEVELING

ELECTRICAL CONNECTION

The electrical control box, shown in figure 7, contains the "ON-OFF" switch with pre-set circuit breaker and can be located on either side of the main conveyor for customer operating convenience. A standard three conductor power cord with plug is provided at the back of the electrical control box for 115 Volt, 60 Hz, 5 amp electrical service. The receptacle providing this service shall be properly grounded. The electrical power supply is turned "ON" by pressing the Green button, "OFF" by pressing the Red button. Before the power cord is plugged into a 115 Volt, 60 Hz outlet, make sure the Red button is depressed and that all packaging materials and tools are removed from the machine.

TAPE LOADING

The taping heads have been pre-set to accommodate 2 inch [50 mm] wide tape rolls. To apply 1-1/2 inch or 36 mm or 1-3/4 inch or 42 mm wide tapes, refer to "Adjustments" Section for set-up information. Two temporary threading needles are shipped in threaded position for initial tape loading convenience.

Two red plastic threading needles were provided with the spare parts and tools included with the Case Sealer. Retain these for continued use in the tape loading operation. For operator assistance, a threading diagram has been applied to the taping heads. However, it is recommended that the more detailed instructions and sketches in this manual be referred to the first few times the unit is loaded until the operator becomes thoroughly familiar with the tape loading operation.

CAUTION - IMPORTANT SAFETY NOTES

1) BOTH THE TOP AND BOTTOM TAPING HEADS UTILIZE EXTREMELY SHARP KNIFE BLADES ON THE ORANGE CUTTER LEVER ASSEMBLY AND WHICH ARE LOCATED UNDER THE GREY PLASTIC BLADE GUARD WHICH HAS THE "CAUTION - SHARP KNIFE" LABEL. BEFORE WORKING WITH THE TAPING HEADS OR ATTEMPTING TO LOAD THE TAPE, IDENTIFY THE BLADE LOCATION. KEEP HANDS OUT OF THESE AREAS EXCEPT AS NECESSARY TO SERVICE THE TAPING HEADS.

2) NEVER MANUALLY PUSH THE APPLYING ROLLER ARM DOWN AS THIS WILL RETRACT THE BLADE GUARD AND PUT YOUR HAND IN MOTION TOWARDS THE TEETH OF THE SHARP KNIFE BLADES. WHEN NECESSARY TO MANUALLY ACTUATE THE TAPE APPLYING MECHANISM, ALWAYS PUSH THE BUFFING ROLLER ARM AS IT WILL NOT DIRECT YOUR HAND TOWARDS THE KNIFE BLADE TEETH.

3) NEVER ATTEMPT TO WORK ON THE TAPING HEADS OR LOAD TAPE WHEN THE BOX DRIVE BELTS ARE RUNNING. MACHINE DAMAGE OR OPERATOR INJURY CAN POTENTIALLY RESULT.

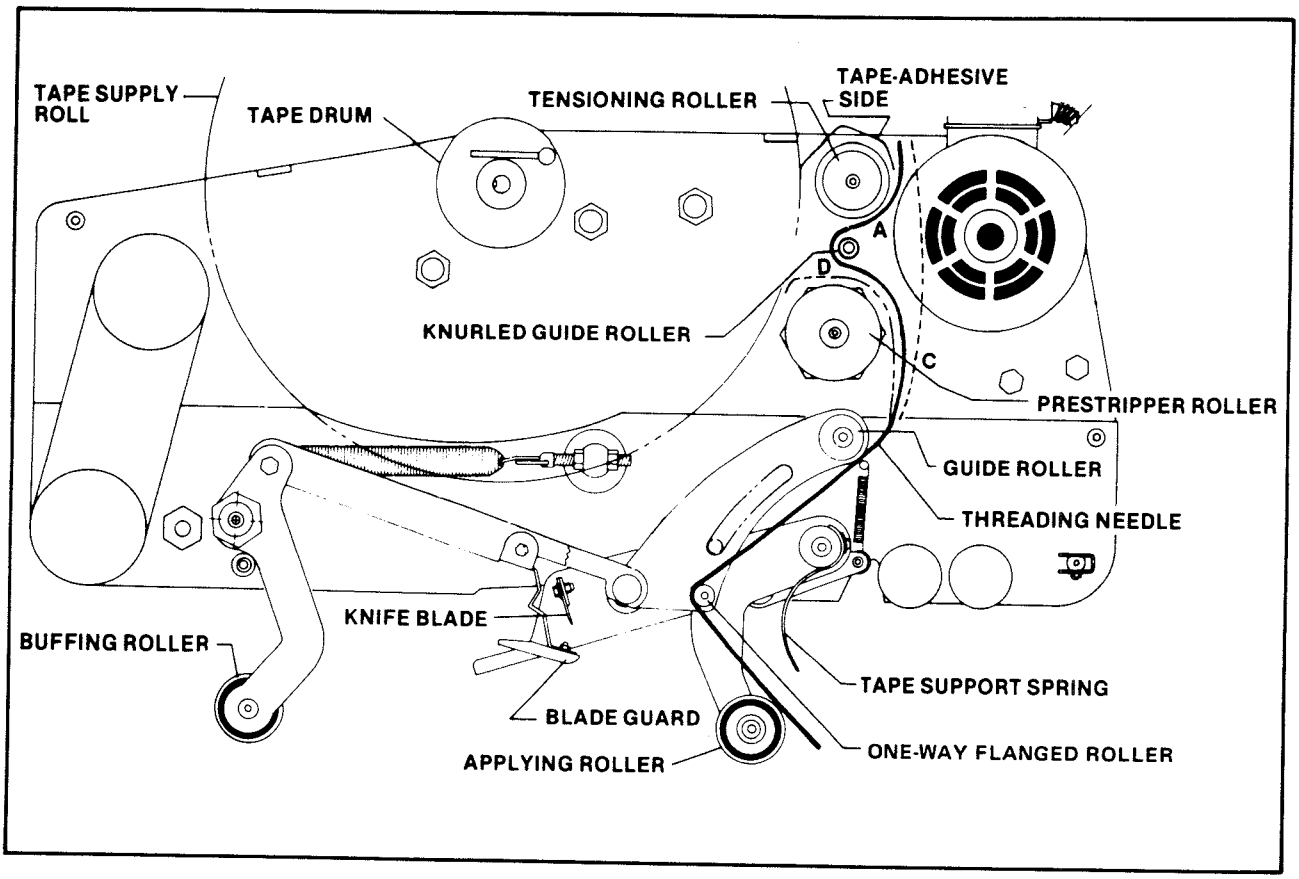

FIGURE 4A - TAPE THREADING DIAGRAM - TOP TAPING HEAD - LEFT SIDE VIEW

TAPE LOADING - TOP TAPING HEAD

After taking note of the safety precautions outlined on the preceeding page, load the top taping head with tape as follows:

1) To load tape, it is first necessary to raise the top taping head. Utilize the top taping head lever latch to raise the top taping head to the fully raised position.

2) With the temporary threading needle already in position, as shown in figure 4A, follow the tape loading procedure from figure 4C to complete the tape threading with this exception; thread tape around tensioning roller, knurled guide roller and prestripper roller in one of three paths depending on the application.

   Path A - Recommended for most applications.

   Path B - (Obsolete)

   Path C - Permits by-pass of pre-strip roller and tighter taping of heavy boxes with heavy duty tapes.

   Path D - Permits by-pass of all tension producing rollers and aids in taping light boxes with light duty tapes.

3) For subsequent tape loading operations, use the red plastic threading needle and follow the loading procedures given figures 4B , C and D to complete the tape threading.

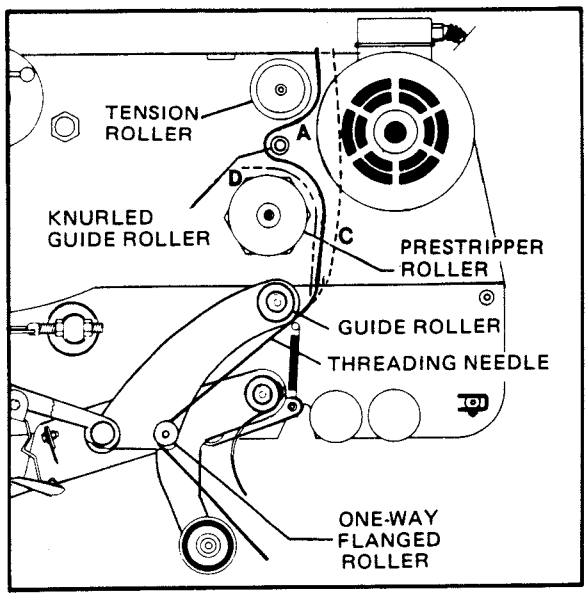

FIGURE 4B

Figure 4B - Insert red plastic needle downward around one-way flanged roller as illustrated in the figure above.

Thread upper end of needle around guide roller and through path A, C or D as shown in Figure 4A .

FIGURE 4C - Turn eccentric roller lever inward to rest against tape drum shaft and place tape roll on drum to dispense tape from bottom of roll toward guide roller with tape adhesive side up. Seat tape roll fully against back flange of drum and turn roller lever outward to secure tape roll. Adhere tape lead end to upper end of threading needle as shown.

FIGURE 4D - Manually turn prestrip roller clockwise, drawing tape from roll while pulling threading needle through tape applying mechanism, until tape is in alignment with applying roller.

Excess tape can be cut with a scissors or knife at applying roller, or as shown, by manually depressing buffing roller arm to expose knife blade and then passing tape across knife blade. Allow buffing roller to slowly return to its rest position after cutting tape so that tape end will stay on applying roller.

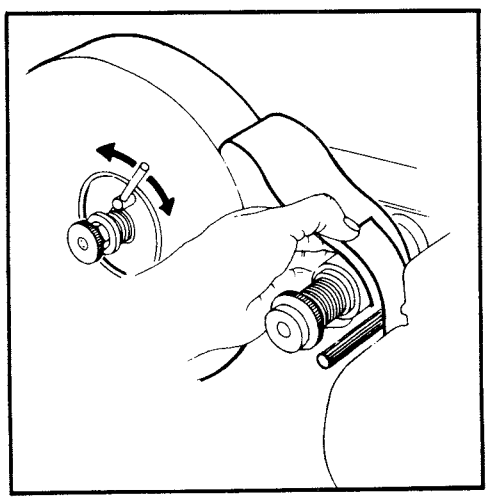

FIGURE 4C

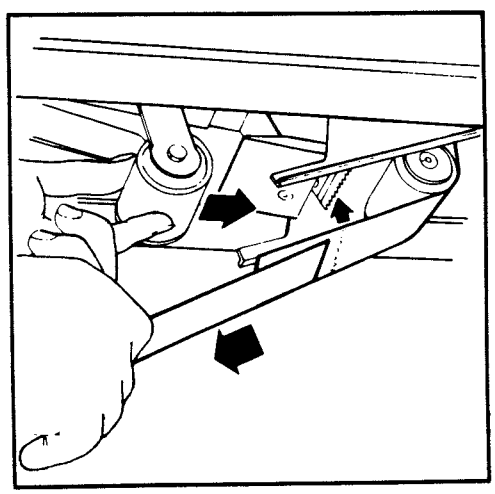

FIGURE 4D

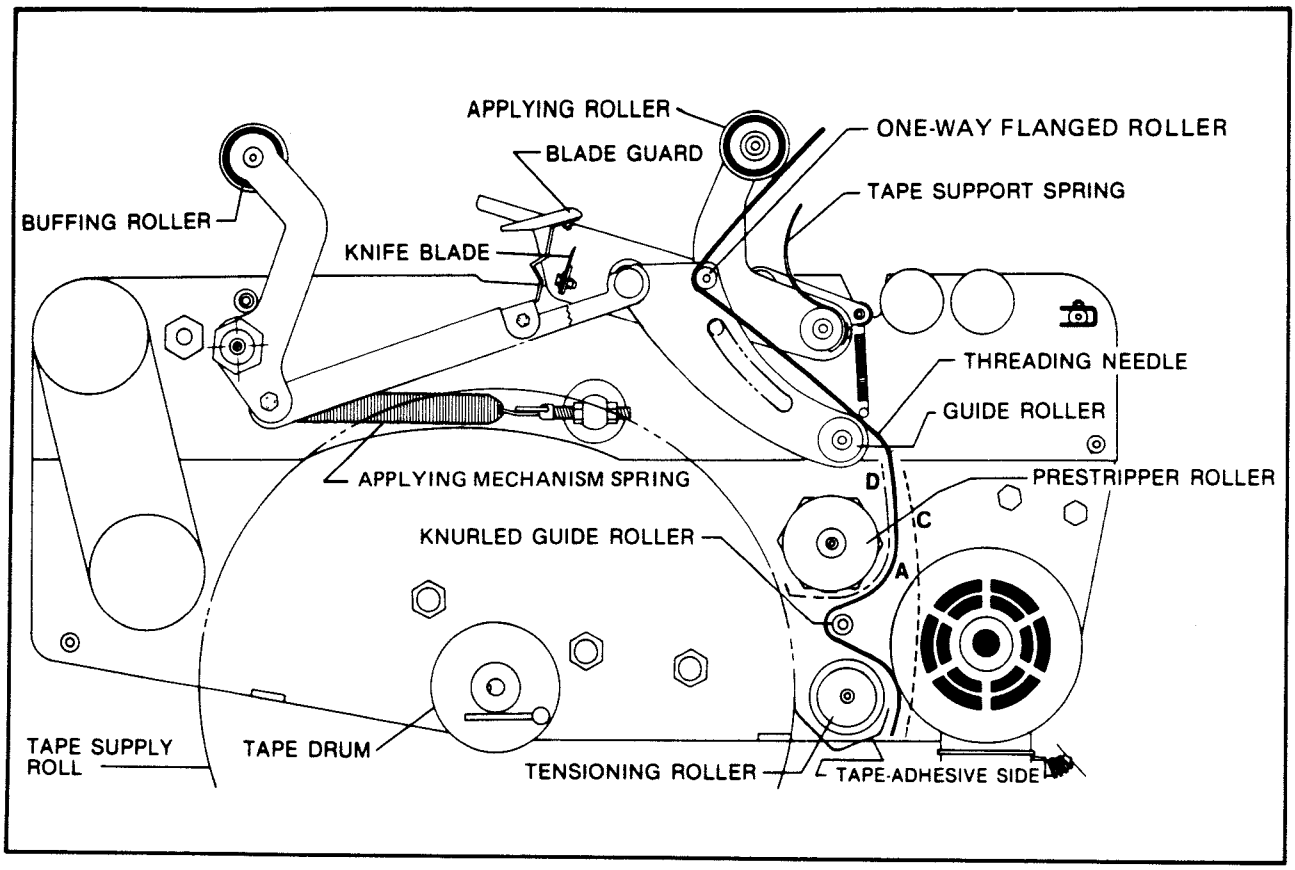

FIGURE 5A TAPE THREADING DIAGRAM - BOTTOM TAPING HEAD - LEFT SIDE VIEW

TAPE LOADING - BOTTOM TAPING HEAD

Noting the knife blade safety precautions, load the bottom taping head with tape as follows:

1) With the temporary threading needle already in position, as shown in figure 5A, follow the tape loading procedure from figure 5C to complete the tape threading with this exception; thread tape around tensioning roller, knurled guide roller and prestripper roller in one of three paths depending on the application.

   Path A - Recommended for most applications.

   Path B - (Obsolete)

   Path C - Permits by-pass of pre-strip roller and tighter taping of heavy boxes with heavy duty tapes.

   Path D - Permits by-pass of all tension producing rollers and aids in taping light boxes with light duty tapes.

2) For subsequent tape loading operations, use the red plastic threading needle and follow the loading procedures given in figures 5B, C and D to complete the tape loading.

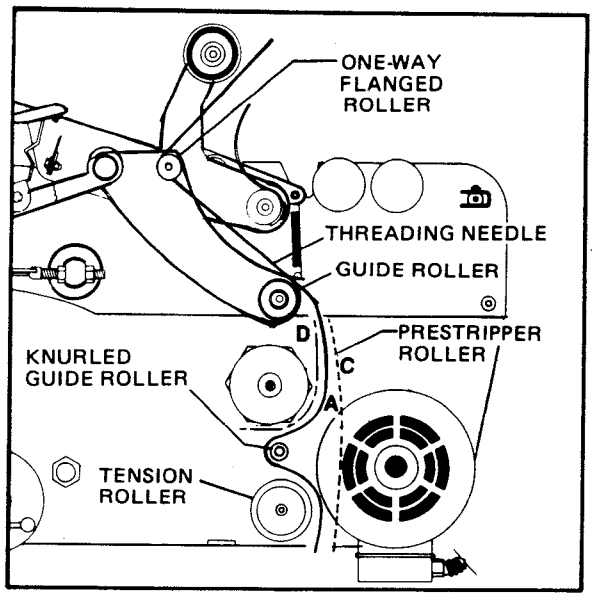

FIGURE 5B

FIGURE 5B - Insert red plastic needle downward around one-way flanged roller as illustrated in the figure above.

Thread lower end of needle around guide roller as shown in Figure 15A and through path A, C, or D.

FIGURE 5C - Turn eccentric roller lever inward to rest against tape drum shaft and place tape roll on drum to dispense tape from bottom of roll toward guide roller with tape adhesive side up. Seat tape roll fully against back flange of drum and turn roller lever outward to secure tape roll. Adhere tape lead end to upper end of threading needle as shown.

FIGURE 5D - Manually turn prestrip roller counter-clockwise, drawing tape from roll while pulling threading needle through tape applying mechanism, until tape is in alignment with applying roller.

Excess tape can be cut with a scissors or knife at applying roller, or as shown, by manually depressing buffing roller arm to expose knife blade and then passing tape across knife blade. Allow buffing roller to slowly return to its rest position after cutting tape so that tape end will stay on applying roller.

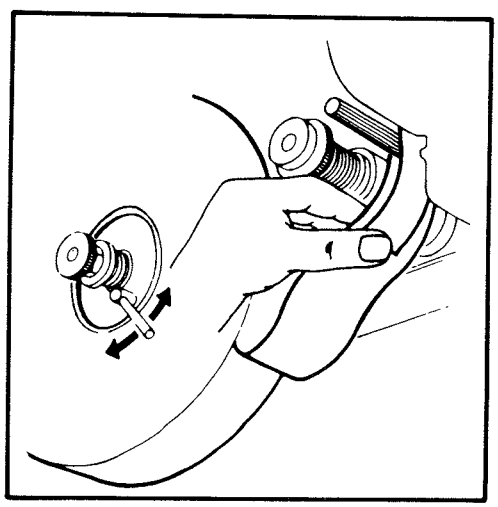

FIGURE 5C

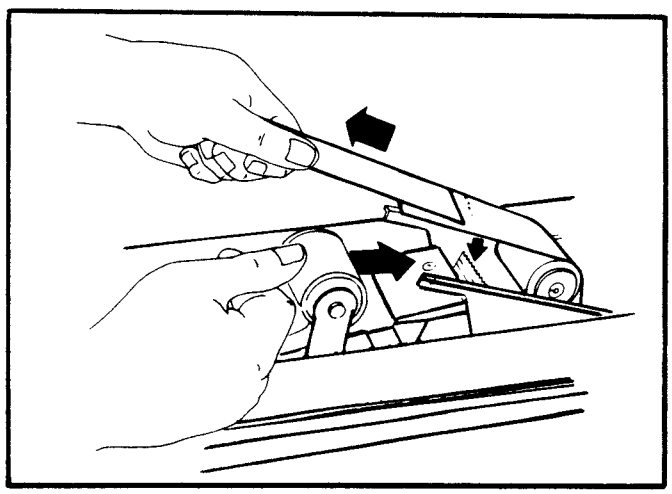

FIGURE 5D

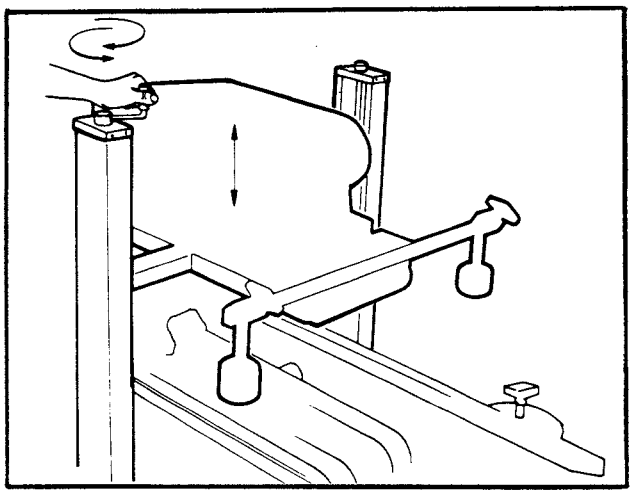

FIGURE 6

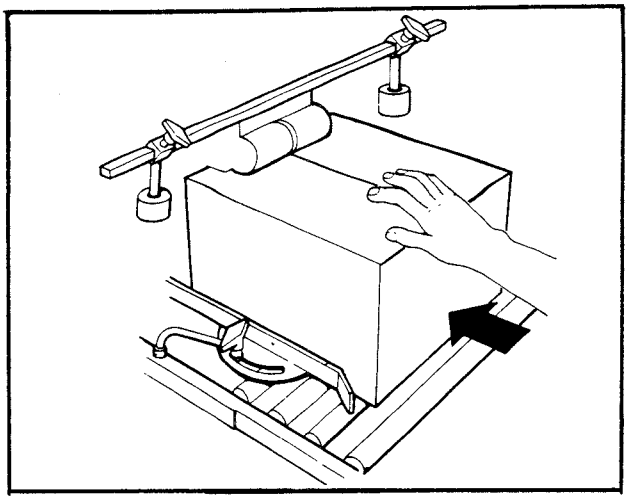

FIGURE 7

Box Size Set-up and Operation

Figure 6 - Once both taping heads are loaded with tape, the top taping head can be positioned for the box height being sealed by means of the height adjustment crank. Turn clockwise to raise head, counter-clockwise to lower head.

Figure 7 - Place box on infeed conveyor with both top and bottom flaps folded and insert under top head skis approximately 2 inches [50 mm]. Lower top head until all flaps are fully closed. Align box top flap center seam with groove in top head front roller.

Figure 8 - Move side guides against each side of box to hold box in position, centered on groove in roller. Tighten hand knobs to secure side guides.

Figure 9 - Adjust top flap compression rollers against top edge of box and tighten knobs to secure rollers in operating position.

Figures 10 & 11 - Press electrical switch to "ON" to start drive belts on lower head. Move box forward under top taping head until it is taken away by drive belts. If box is hard to move under head or is crushed, raise top head slightly. If box movement is jerky or stops under top head, lower top head slightly to add more pressure between box and drive belts.

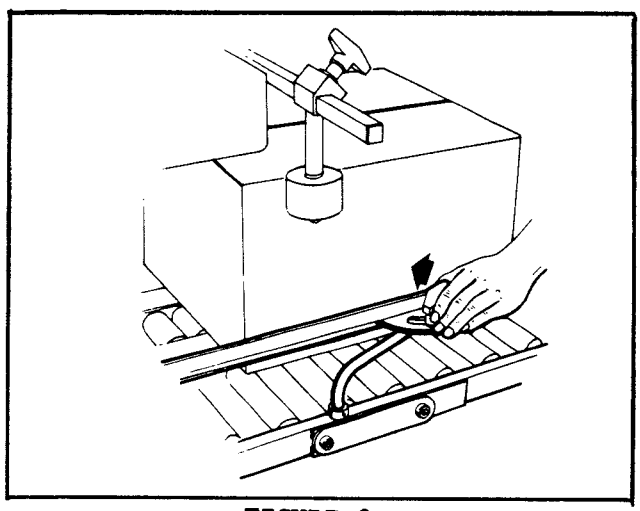

FIGURE 8

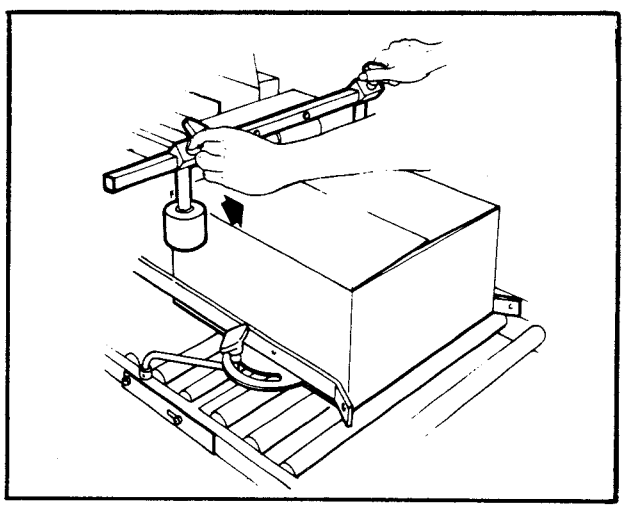

FIGURE 9

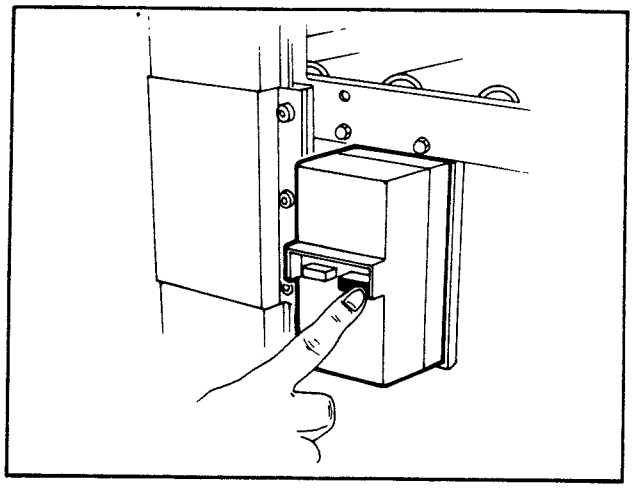

FIGURE 10

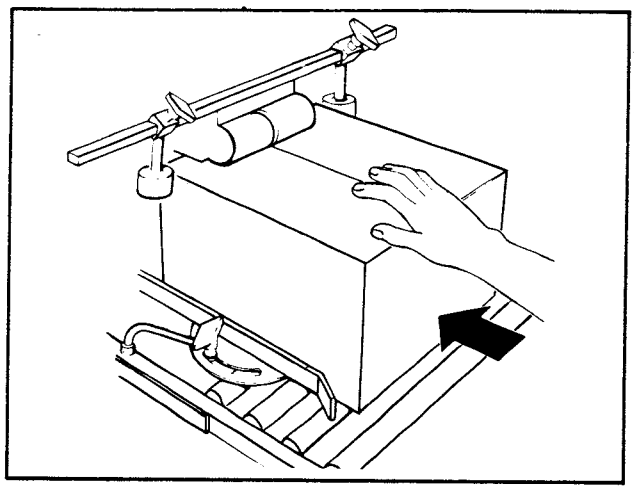

FIGURE 11

SPECIAL USE SET-UP INSTRUCTIONS

BOX HEIGHT CAPACITY - Maximum - Maximum box height capacity can be adjusted by conveyor bed height adjustment described on page 8.

BOX HEIGHT CAPACITY - Minimum - The minimum box height capacity can be reduced to 4 inches or 100 mm by removing the blade guard assembly (figure 27) from both taping heads and removing the lower portion (cut off at horizontal mark) of the rubber bumper (figure 13 on both side columns of the main frame.

BOX WIDTH CAPACITY - Maximum - To set the side guides at maximum width, it is necessary to raise the bumper stop collars (figure 13) on both side columns above the side guides. This restricts the minimum box beight to 8 inches or 200 mm.

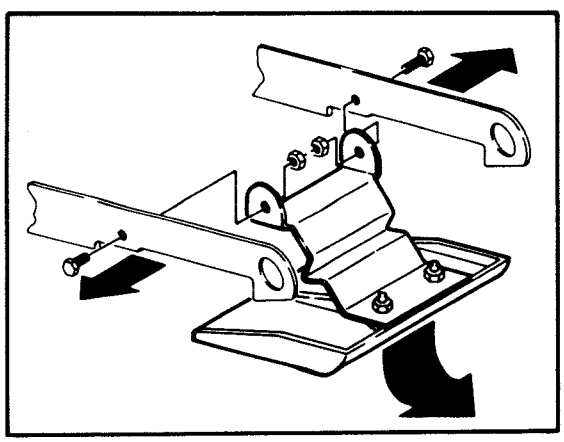

FIGURE 12 - BLADE GUARD

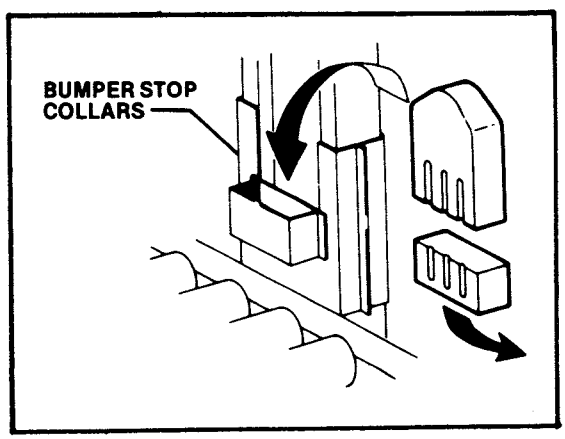

FIGURE 13 - RUBBER BUMPER

ADJUSTMENT INSTRUCTIONS

TAPE DRUM ASSEMBLY

In addition to holding the tape supply roll, the tape drum assembly provides adjustable friction brake to prevent tape roll over travel and provides adjustment for tape web alignment as follows:

1) FRICTION BRAKE - Refer to Figure 14.
Adjustable by turning the self-locking nut on the shaft to vary compression of the spring. Clockwise turning of nut increases braking force to prevent tape roll over travel, counter-clockwise turning decreases braking force. Adjust to minimum drag that prevents excessive tape roll over travel.

2) TAPE WEB ALIGNMENT - Refer to Figure 15.
The tape drum assembly on each taping head is preset to accommodate 2 inch [50 mm] wide tape, but is adjustable to provide alignment of narrower tapes. If adjustment is necessary to center the tape width on the centerline of the taping head (and therefore box center seam), make adjustment as follows:
   a) Loosen jam nut or hand knob (figure 14) behind tape drum on tape drum shaft.
   b) Turn tape drum shaft in or out by means of knurled knob on end of shaft to center the tape web.
   c) Tighten jam nut or hand knob.
No other components require adjustment for tape web alignment.

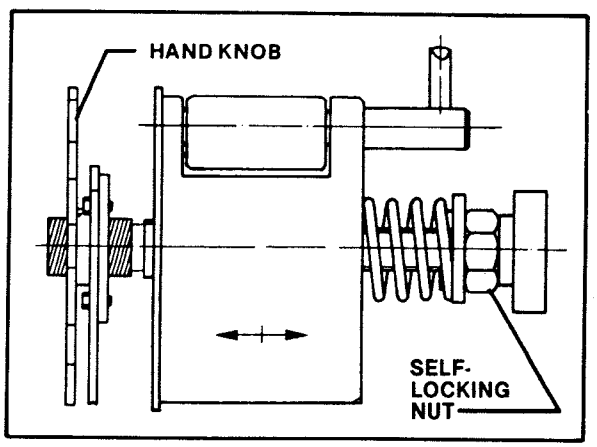

FIGURE 14

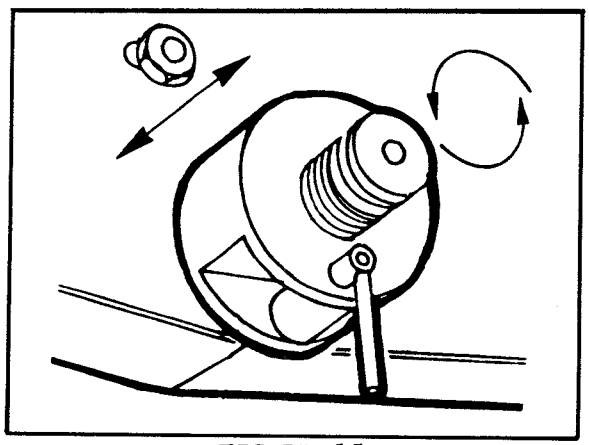
FIGURE 15

TENSIONING ROLLER ASSEMBLY

The tape web tension is controlled by the adjustment of the friction brake by means of the knurled nut (figure 16) which varies compression of the spring. Clockwise turning of the knurled nut increases the tape web tension, counter-clockwise turning decreases the tape web tension. Adjust as necessary to obtain consistent alignment of tape through the tape applying mechanism, consistent position of the tape end at the applying roller, and tight, uniform tape seals on boxes.

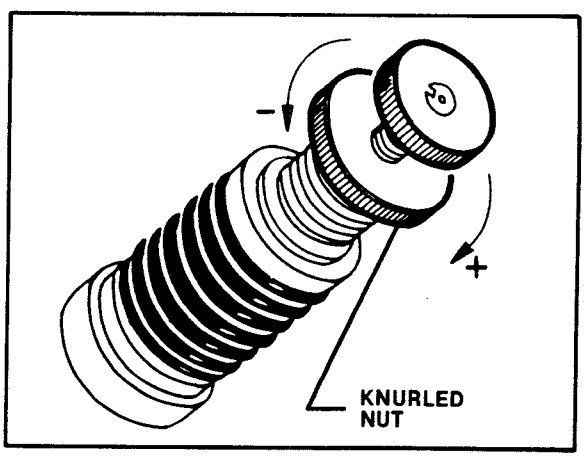

FIGURE 16

Tape Support Spring

The S-shaped tape support spring, shown in figures 4A & 5A holds the lead end of tape in a controlled position at the applying roller. Its position is adjustable by loosening the phillips head screw on the mounting shaft, moving the spring by pivoting it around the shaft, and tightening the phillips head screw. The spring position should be adjusted so its tip is approximately 1/8 to 1/4 inch [3 to 6 mm] away from the tape when it is stretched straight between the one-way roller and applying roller.

Applying Mechanism Spring

The applying mechanism spring, shown in figures 4A & 5A controls applying and buffing roller pressure on the box and returns the mechanism to the rest position. The spring pressure is preset for normal operation but is adjustable by means of the mounting screw.

Decrease spring pressure by adjusting mounting screw as shown in figure 17.
Increase spring pressure by adjusting mounting screw as shown in figure 18.

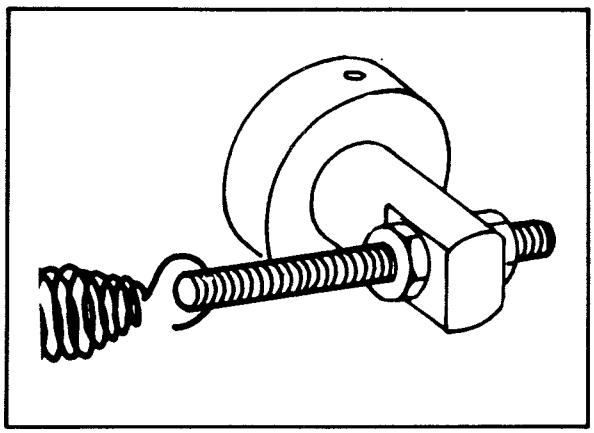

FIGURE 17

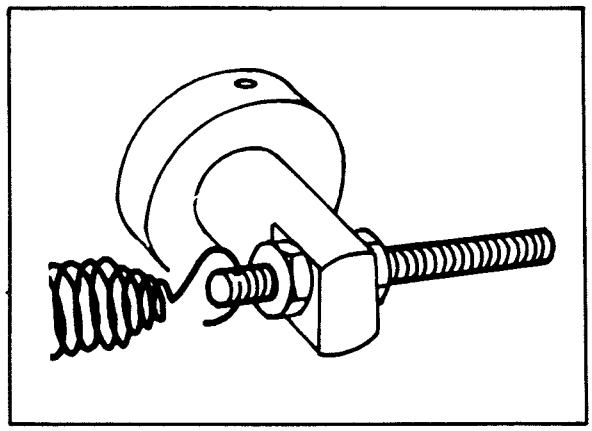

FIGURE 18

Box Drive Belts

The two continuously moving box drive belts provided on the taping head, convey boxes through the tape applying mechanism. The box drive belts are powered by the electric motor through a timing belt/roller chain transmission.

Tension and tracking adjustments of these belts may be required during normal operation. Belt tension must be adequate to positively move the box through the machine and they should run fully on the surface of the pulleys at each end of the taping head. The idler pulleys on the infeed end of the taping head are positioned by adjustment screws shown in Figure 19A. Adjustment of these screws can be made by using the following steps to provide proper tension and tracking. Each belt is adjusted separately.

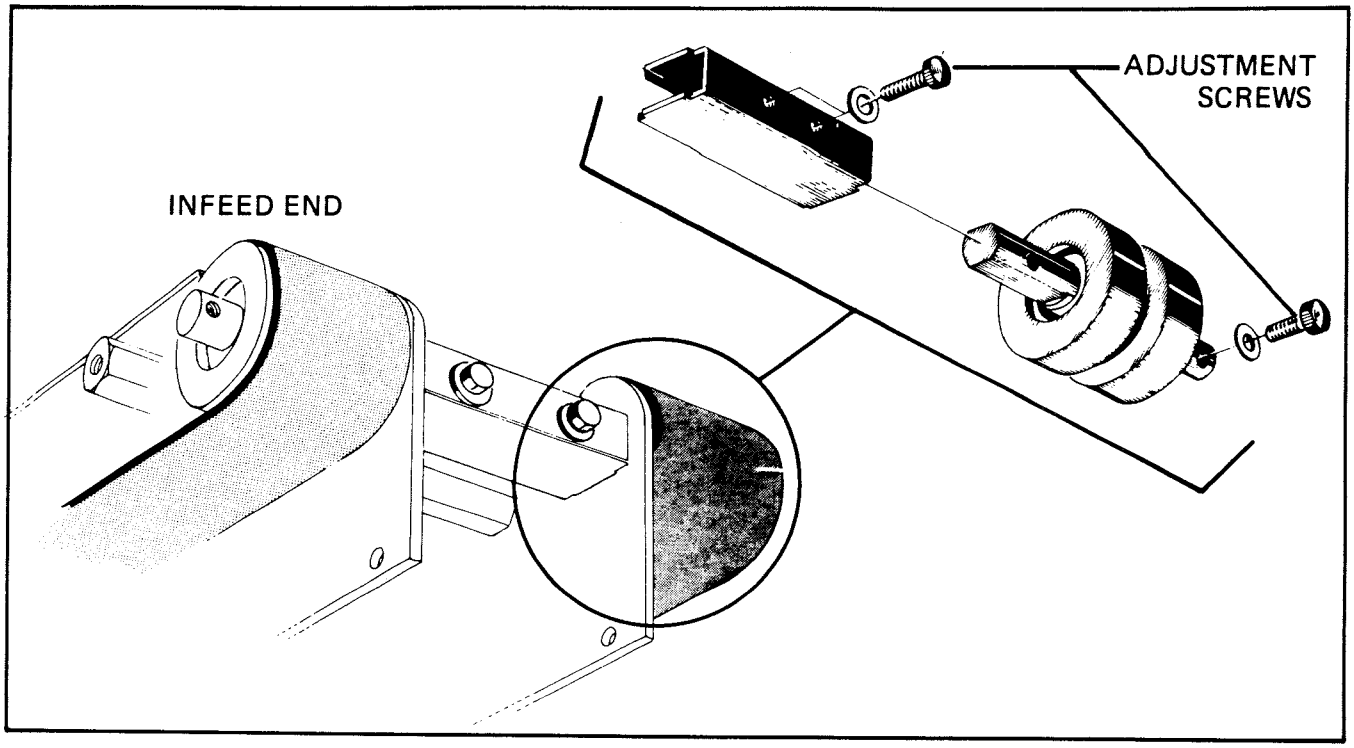

FIGURE 19A - BOX DRIVE BELTS - LOWER TAPING HEAD

Box Drive Belts (Continued)

Step 1. Tension is obtained by uniform tightening of the adjustment screws so that a moderate pulling force of 7 to 8 lbs. [3.0 to 3.5 kg] applied at the midspan will deflect the belt 1/2 inch [13 mm]. Refer to Figure 19B.

This will assure positive contact between the belt and the drive pulley on the discharge end of the taping head.

Step 2. Belt tracking is adjusted by using the same adjustment screws. Start the drive motor and observe belt tracking. Tighten the belt adjutment screw on the side away from which the belt should move using the offset box wrench provided in the tool kit. Tighten only 1/6 turn at a time and wait for the belt to walk to its new position before making a further adjustment. If the belt moves too far, loosen the adjustment screw slightly or tighten the other adjustment screw to bring it back. Avoid continued alternate tightening of screws or excessive belt tension can result.

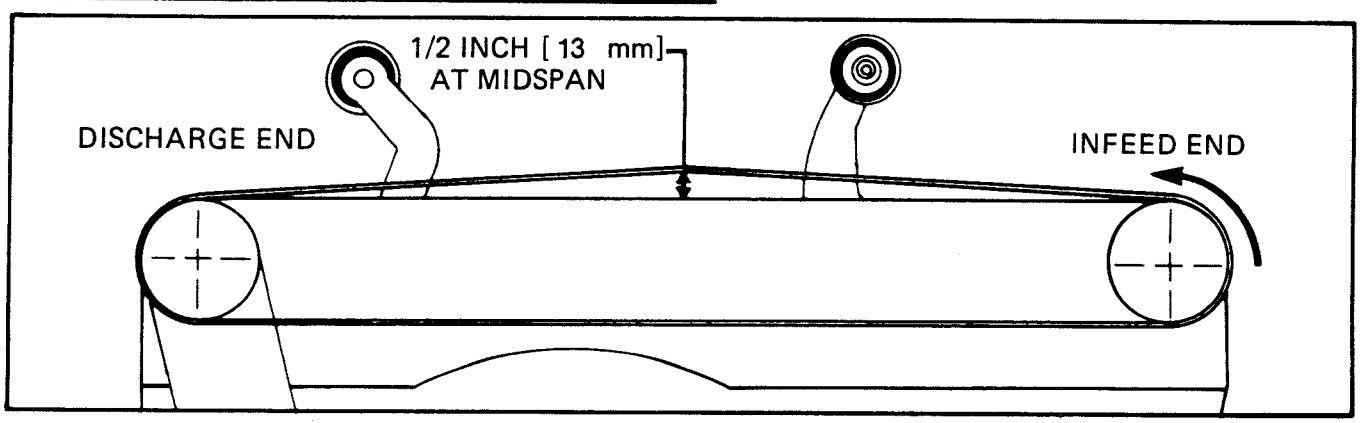

FIGURE 19B - BOX DRIVE BELT TENSION ADJUSTMENT

MAINTENANCE

TOOL KIT

Since the Case Sealer utilizes metric fasteners, a tool kit consisting of the necessary wrenches is provided with the machine. Retain these with the machine or in a secure location for set-up, adjustment, and maintenance work.

An oil can for lubrication is also provided as a convenience item for your preventive maintenance program.

BLADE REPLACEMENT: Refer to yellow pages Parts Illustrations, Figure 14.

CAUTION - BLADES ARE EXTREMELY SHARP. DISCONNECT THE MAIN POWER SUPPLY TO THE CASE SEALER BEFORE BEGINNING THE REPLACEMENT.

1) Remove and retain the blade screws (14-13) and washers (14-14) holding the blade. Remove the old blade.

2) Position the new blade with the beveled side AWAY FROM the blade holder as shown in figure 14. Assemble the blade screws with one washer next to the screw head as shown.

   NOTE: Position blade at angle as shown in figure 20 (one end of cutting edge 1/8 inch [3 mm] lower). Blade setting must not interfere with blade guard.

The same steps are followed on the Top and Bottom Taping Heads. Connect the main power supply.

CAUTION - IMPORTANT SAFETY NOTES

1) TURN OFF ELECTRICAL POWER SUPPLY BEFORE BEGINNING MAINTENANCE.

2) DISCONNECT POWER CORD FROM ELECTRICAL SUPPLY BEFORE BEGINNING MAINTENANCE.

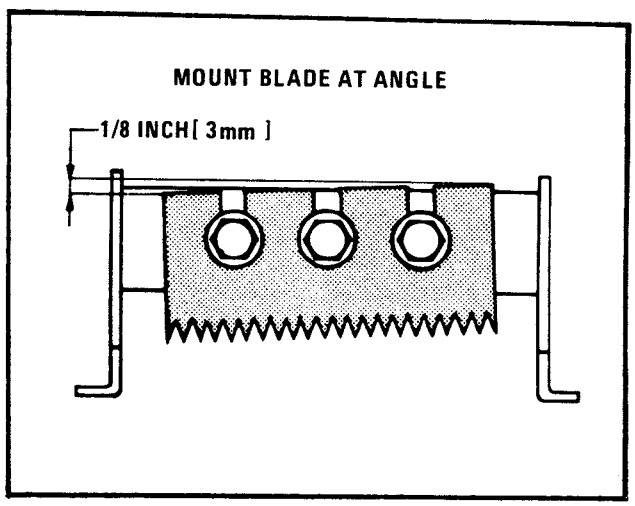

FIGURE 20 - BLADE REPLACEMENT

Cut-Off Blade:

The cut-off blades used normally clean themselves.

Should tape adhesive build-up occur, carefully wipe clean with oily cloth.

REPLACING BOX DRIVE BELTS:

1) Remove the taping head from the frame assembly by disconnecting the electrical plug provided and loosen the four mounting screws. Make sure the taping head has adequate support before the screws are removed.

2) Loosen the belt adjustment screws with the offset box wrench provided in the tool kit and remove the old belt.

3) Install new belts with the arrow (stamped on underside) pointing in the direction of the belt movement.

4) Adjust the belt tension by following Step 1 under adjustments.

5) Reinstall the taping head into the frame assembly and complete the belt installation by adjusting the belt tracking following Step 2 under adjustments.

CLEANING OF THE MACHINE

Regular slotted containers produce a great deal of dust and paper chips when processed or handled in equipment. If this dust is allowed to build up on machine components, it can cause component wear and overheating of drive motor. The dust build up can best be removed from the machine by a shop vacuum. Depending on the number and type of boxes sealed in the Case Sealer, this cleaning should be done approximately once per month. If the boxes sealed are dirty, or if the environment in which the machine operates is dusty, cleaning on a more frequest basis may be necessary. Excessive dirt build up that cannot be removed by vacuuming should be wiped off with a damp cloth. Never attempt to remove dirt by blowing it out with compressed air. This can cause the dirt to be blown inside the machine transmission, motor, and sliding surfaces. Gritty dirt in these areas can cause serious damage.

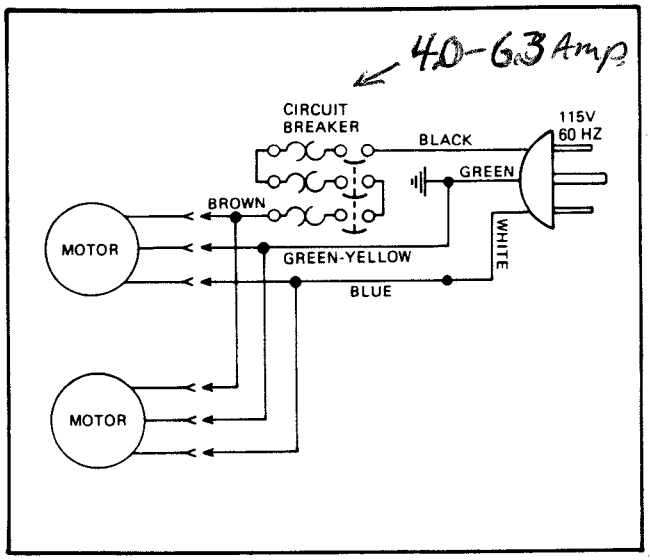

FIGURE 21A

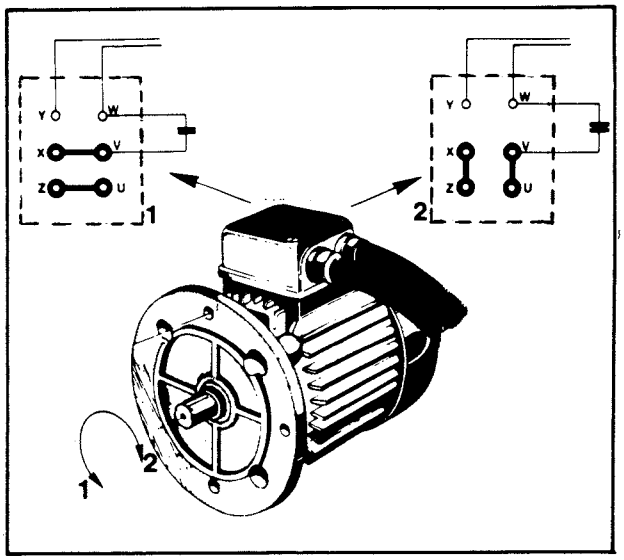

FIGURE 21B

ELECTRICAL SCHEMATIC

The electrical system of the Case Sealer is illustrated in figure 21A. The motor may be reversed by removing the terminal cover and relocating the jumper strips as illustrated in figure 21B. The motor capacitor, which is under the plastic cover on the backside of the powered taping head, is shown in figure 2 of the Parts Illustration section. No adjustments to the electrical system are required.

CIRCUIT BREAKER

The Case Sealer is equipped with a circuit breaker which trips the "On-Off" switch to "OFF" position. Located inside the electrical control box on the side of the main frame just below the conveyor bed, the circuit breaker has been pre-set for 5 amps and requires no further maintenance. Should the circuit breaker be replaced, check the amp setting before installation. Remove the front cover on the electrical box from the under side as shown in figure 22 and set the amp setting (A) at 5 amps.

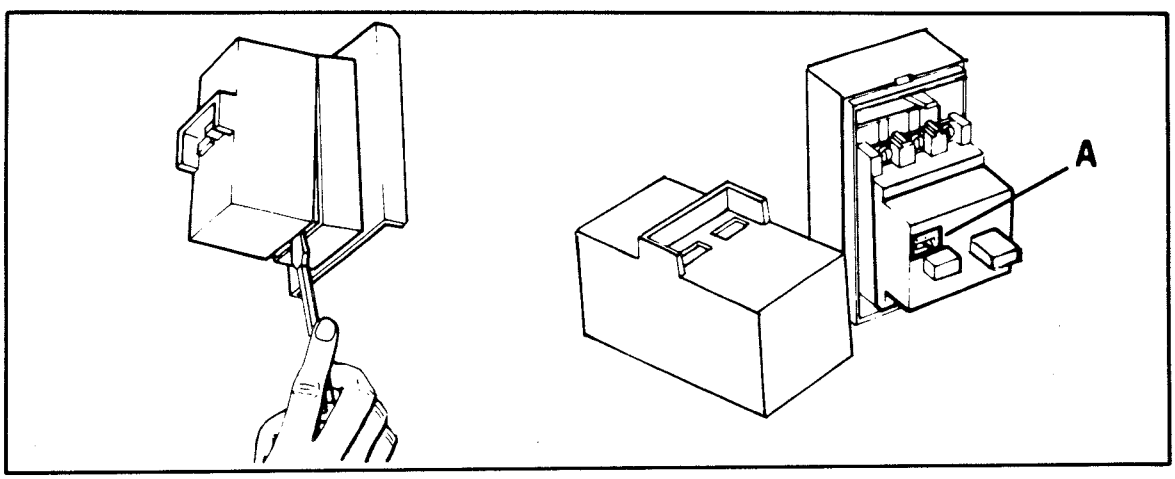

FIGURE 22

MECHANICAL LUBRICATION

Like most other equipment, the Case Sealer must be properly lubricated to insure long, trouble/free service. Most of the machines bearings are permanently lubricated and sealed and do not need to be greased. The drive motor is also permanently lubricated and should not require additional lubrication. The timing belt/pulley transmission does not require any lubrication.

Figure 23 and similar labels on the machine illustrate the taping head and frame points which should be lubricated every 250 hours of operation. The oil can supplied with the Case Sealer can be utilized to lubricate the rotating and pivoting points noted by the arrows with SAE #30 non-detergent oil. Apply light coat of SAE #30 non-detergent oil to roller chain drive between timing belt/pulley transmission and box drive belt shaft. At the same time, a small amount of multipurpose grease should be applied to the end of each spring where the loop is secured at an eyelet, post, or hole.

Top flap compression rollers require lubrication periodically. Apply small amount of SAE #30 non-detergent oil to roller shafts.

Be sure to wipe off excess oil and grease as it will attract dust and dirt which can cause premature wear and jamming. Take care that oil and grease are not left on the surface of rollers around which tape is threaded, as it can contaminate the tape's adhesive.

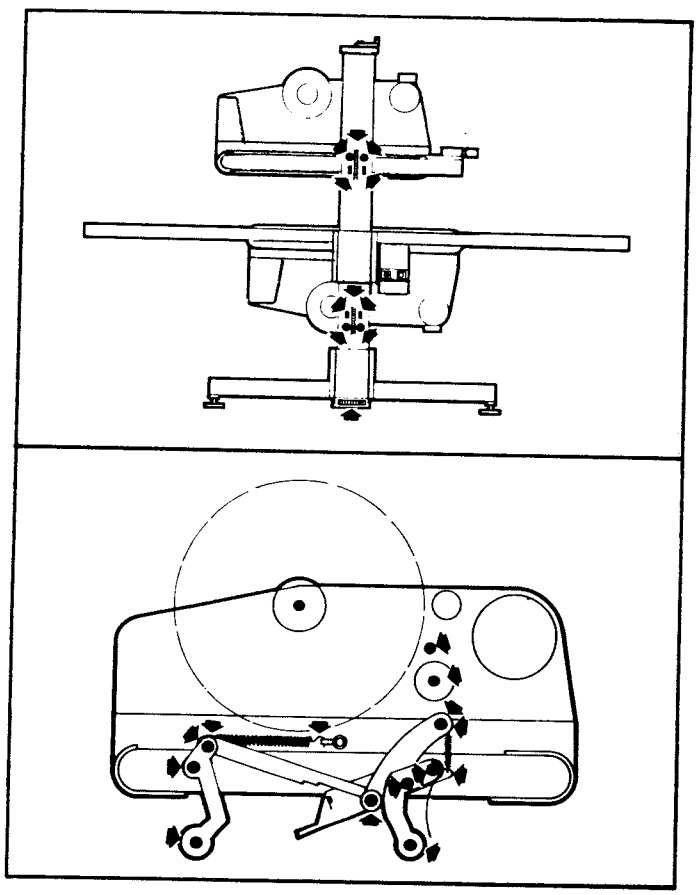

FIGURE 23 - LUBRICATION POINTS

REPLACEMENT PARTS & SERVICE INFORMATION

SPARE PARTS

A set of spare parts that will periodically require replacement due to normal wear or breakage is supplied with the Case Sealer. The set includes the following which should be reordered as consumed to keep the Case Sealer in production:

Quantity	Ref. No.	3M Part No.	Description
1	13-02	78-8017-9119-1	Spring-Main, Top Head, Zinc Pl.
1	13-20	78-8017-9424-5	Spring-Main, Button Head
4	14-10	78-8017-9136-5	Spring - Cutter
2	14-12	78-8017-9173-8	Blade - 2.56 inch/65 mm

In addition to the above minimum spare parts, it is suggested that the following spare parts be ordered and kept on hand:

Quantity	Ref. No.	3M Part No.	Description
1	2-01	78-8001-7176-7	Belt-Timing 225L050
5	5-06	78-8017-9062-3	Washer - O-Ring 150 mm
2	8-10	78-8017-9049-0	Belt - Box Drive
7	9-21	78-8017-9175-3	Washer, O-Ring, 138 mm
1	11-11	78-8017-9101-9	Roller - Applying
1	11-19	78-8017-9272-8	Spring-Tape Support
1	15-08	78-8017-9140-7	Roller - Buffing

TOOL KIT

The tool kit, P/N 78-8023-2604-7, provided with the Case Sealer, is available as a replacement stock item. The kit contains the necessary wrenches, an oil can and the first set of spare parts listed above. (Threading tool contained in above kit - Part No. 78-8017-9433-6.) Refer to "How To Order Replacement Parts" for ordering information.

HOW TO ORDER REPLACEMENT PARTS

1) Order parts by part number, part name, machine catalog number, model number and part quantity required.

> Minimum billing on parts orders will be $10.00.
>
> Replacement part prices available on request.

2) Replacement parts and part prices available direct from:

Dispenser Parts/3M
P. O. Box 33900
St. Paul, MN 55133

3) Refer to the front of the instruction manual for branch repair service information.

ATTACHMENTS

Additional information on the attachments listed below is included with the manual.

Part Number	Attachment Name
78-8017-9417-9	Auxiliary Tape Roll Mount Attachment
78-8017-9160-5	Caster Attachment
78-8023-2512-2	Box Hold Down Attachment

TAPING HEAD ASSEMBLIES

1) Refer to Taping Head Assemblies figures to find all the parts illustrations identified by figure numbers.

2) Refer to the figure or figures to determine the individual parts required and the parts reference number.

3) The replacement parts list, that follows each illustration, includes the part number and part description for the parts in that illustration.

> NOTE - The complete description has been included for standard fasteners and some commercially available components. This has been done to allow obtaining these standard parts locally, should the customer elect to do so.

4) Refer to page 23 of "Maintenance - Parts Orders and Service Information" section of this manual for replacement parts ordering information.

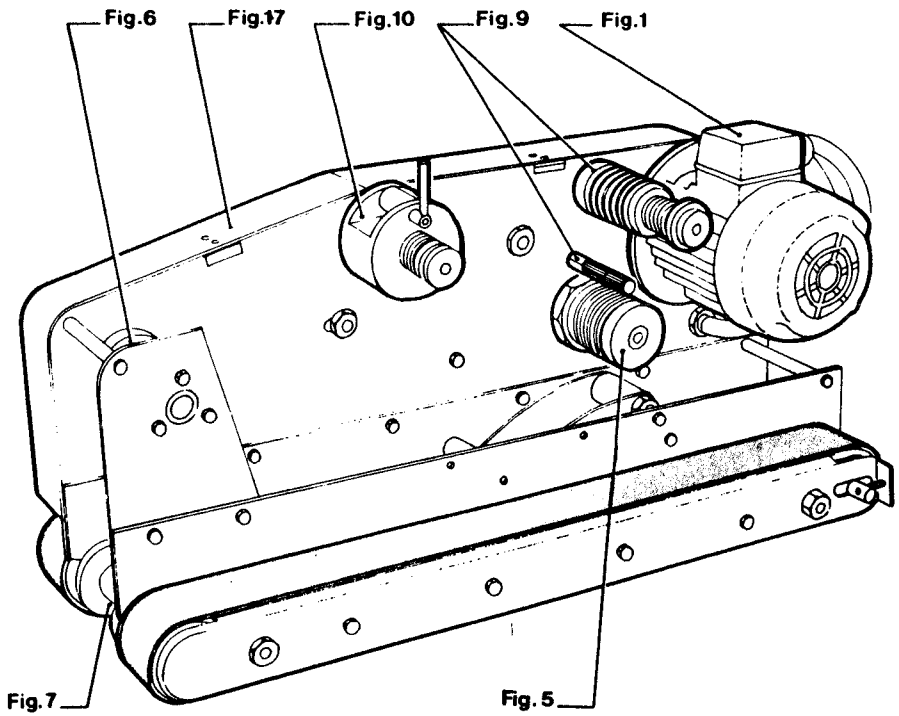

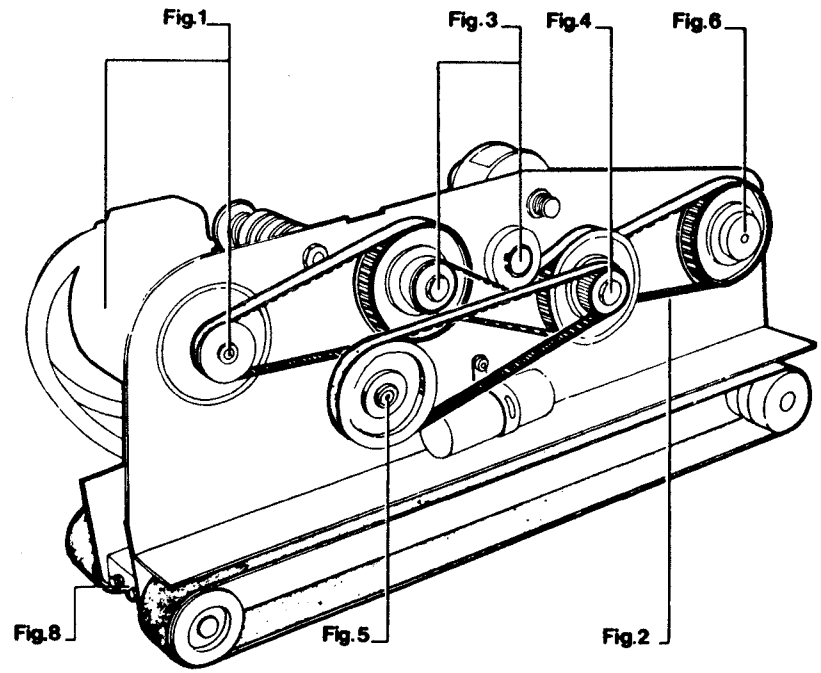

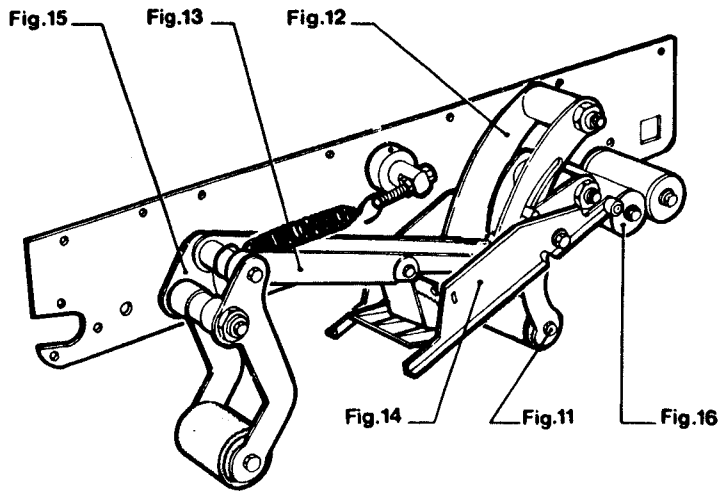

Taping Head Assemblies

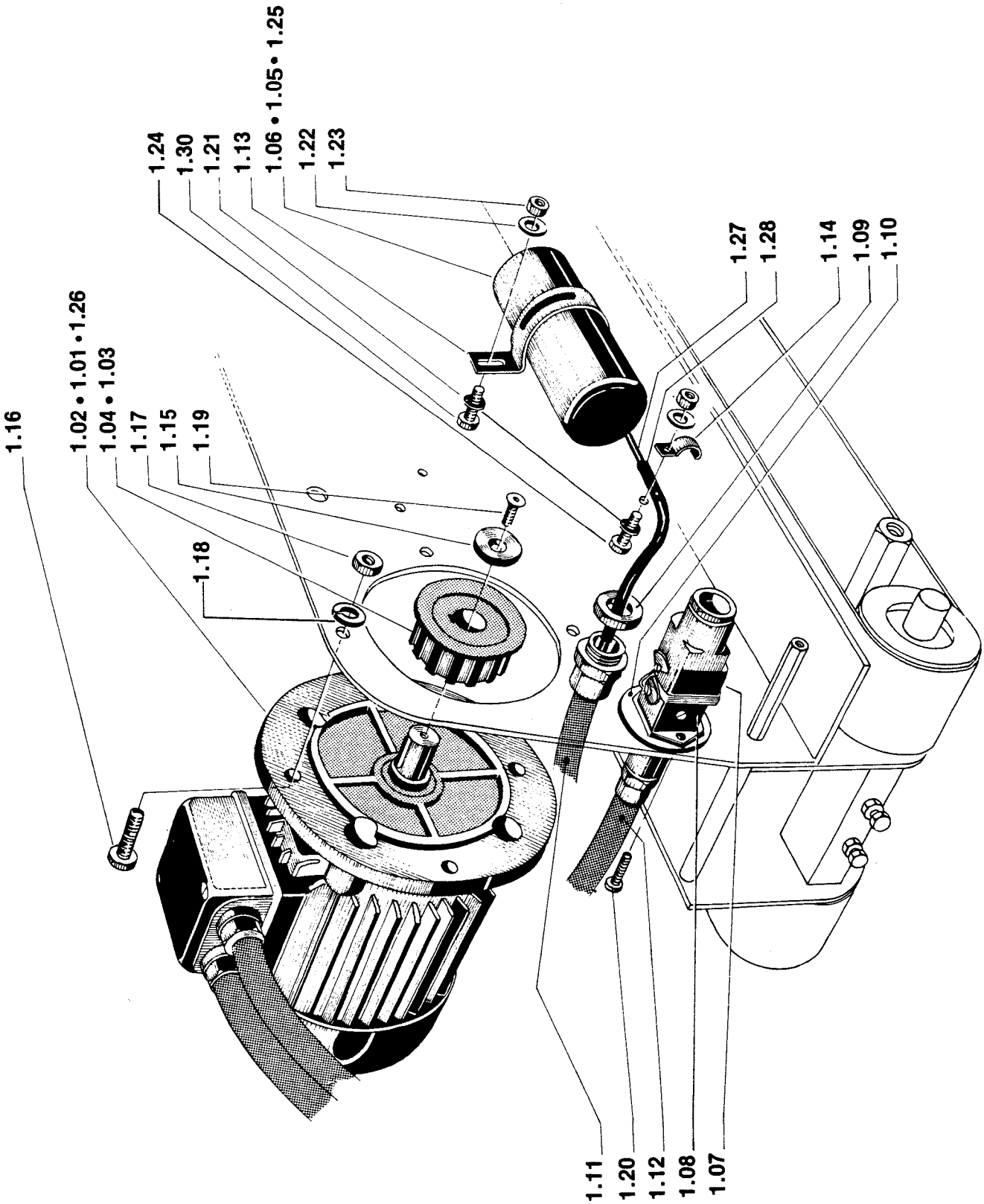
1.16
1.02 • 1.01 • 1.26
1.04 • 1.03
1.17
1.15
1.19
1.18
1.24
1.30
1.21
1.13
1.06 • 1.05 • 1.25
1.22
1.23
1.27
1.28
1.14
1.09
1.10
1.11
1.20
1.12
1.08
1.07

Figure 1

REF. No.	3M PART No.	DESCRIPTION
1-01	78-8017-9008-6	Motor - Single Phase, 220V, 50 Hz, 0,18 HP, Type B5
1-02	78-8017-9009-4	Motor - Single Phase, 110V, 60 Hz, 0,18 HP, Type B5
1-03	78-8017-9010-2	Pulley - Timing belt for 220/240 Volt Motor, z-14
1-04	78-8017-9011-0	Pulley - Timing belt for 110 Volt Motor, z-12
1-05	78-8017-9163-9	Capacitor - 5 MFD, 240V, 50 Hz
1-06	78-8017-9012-8	Capacitor - 20 MFD, 110V, 60 Hz
1-07	78-8017-9013-6	Plug
1-08	78-8017-9014-4	Receptacle
1-09	78-8017-9015-1	Nut
1-10	78-8017-9016-9	Washer - Insulating
1-11	78-8017-9164-7	Sleeving - Length 30cm
1-12	78-8017-9165-4	Sleeving - Length 23.5cm
1-13	78-8017-9166-2	Clip - Capacitor
1-14	78-8017-9167-0	Clip - Cable
1-15	78-8017-9033-4	Washer - 20mm
1-16	78-8017-9301-5	Screw - Hex Head M8 x 25
1-17	26-1000-1347-8	Nut - Hex regular pitch, A/STL, Metric DIN Std M8 Dia. 1.25P NI PL DIN 934-8
1-18	78-8005-5736-1	Lockwasher - for M8 screw
1-19	78-8017-9161-3	Screw - Allen FH M4 x 10
1-20	78-8017-9425-2	Screw - Self-Tapping, 8 x 13mm
1-21	78-8010-7435-8	Washer - Metric, Lock Spr. Stl. M6
1-22	78-8023-2478-6	Washer - Metric, 6,2 ID x 18 OD x 1,5 mm thk.
1-23	78-8010-7418-4	Nut - Metric, Hex, Stl., M6
1-24	78-8017-9331-2	Screw - Metric, M6 x 20 Hex Hd. Cap, Stl. Black Zinc, DIN 933-8.8
1-25	78-8017-9056-5	Capacitor - 6.3 Mfd. 220V, 50 Hz
1-26	78-8017-9057-3	Motor - Single Phase, 240V, 50 Hz., 0.18 HP, B5
1-27	78-8017-9369-2	Cable Assembly - Motor to Capacitor
1-28	78-8017-9371-8	Sleeving - Plastic
1-30	78-8032-0375-7	Screw - Hex Hd. M6x16, Nick, Pl.

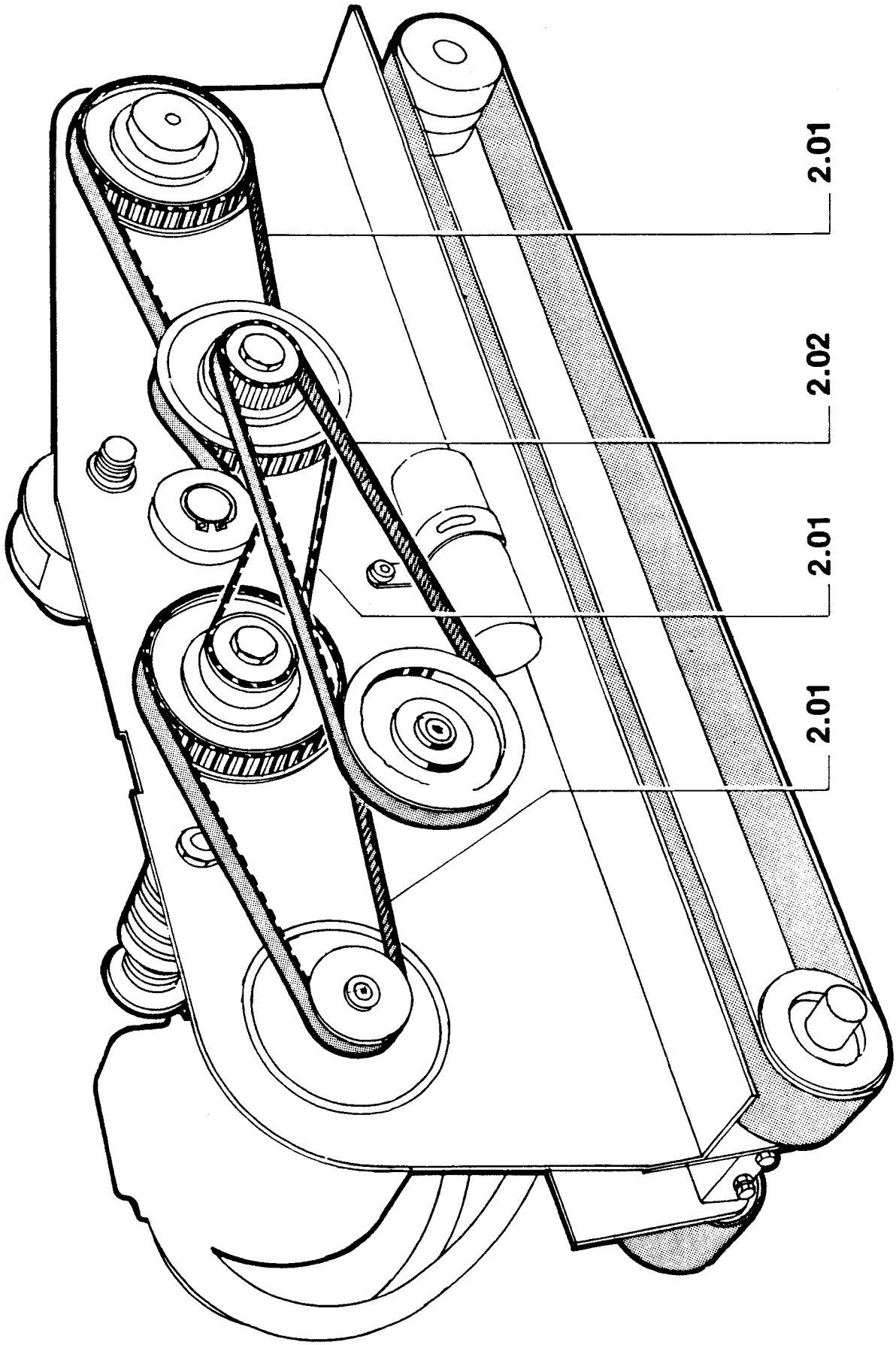

Figure 2

REF. No.	3M PART No.	DESCRIPTION
2-01	78-8001-7176-7	Belt - Timing, 225L050
2-02	12-7997-4978-8	Belt - Timing, 255L050

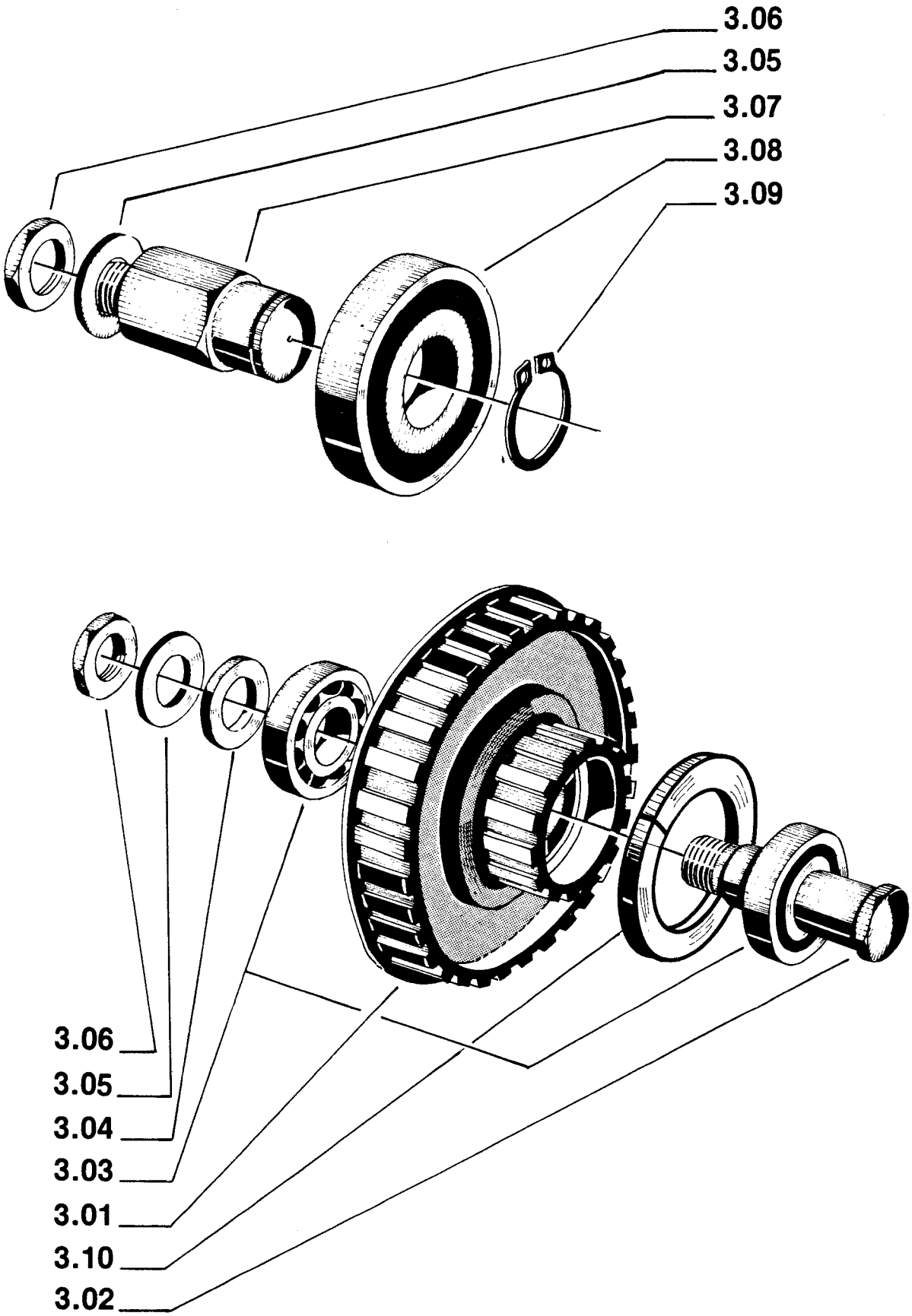

Figure 3

REF. No.	3M PART No.	DESCRIPTION
3-01	78-8017-9019-3	Pulley - Timing Belt, Z-32/14
3-02	78-8017-9020-1	Shaft - Pulley
3-03	26-1000-4350-9	Bearing - 6002-2RS
3-04	78-8017-9021-9	Washer - Special, 25mm x 12mm
3-05	78-8017-9059-9	Washer - Flat for M12 Screw DIN 125A
3-06	78-8017-9022-7	Nut - Special, M12 x 1
3-07	78-8017-9023-5	Shaft - Tensioning
3-08	78-8017-9060-7	Bearing - 6304 - 2RS
3-09	78-8017-9061-5	Snap ring - for 20mm Shaft
3-10	78-8017-9025-0	Washer - Nylon

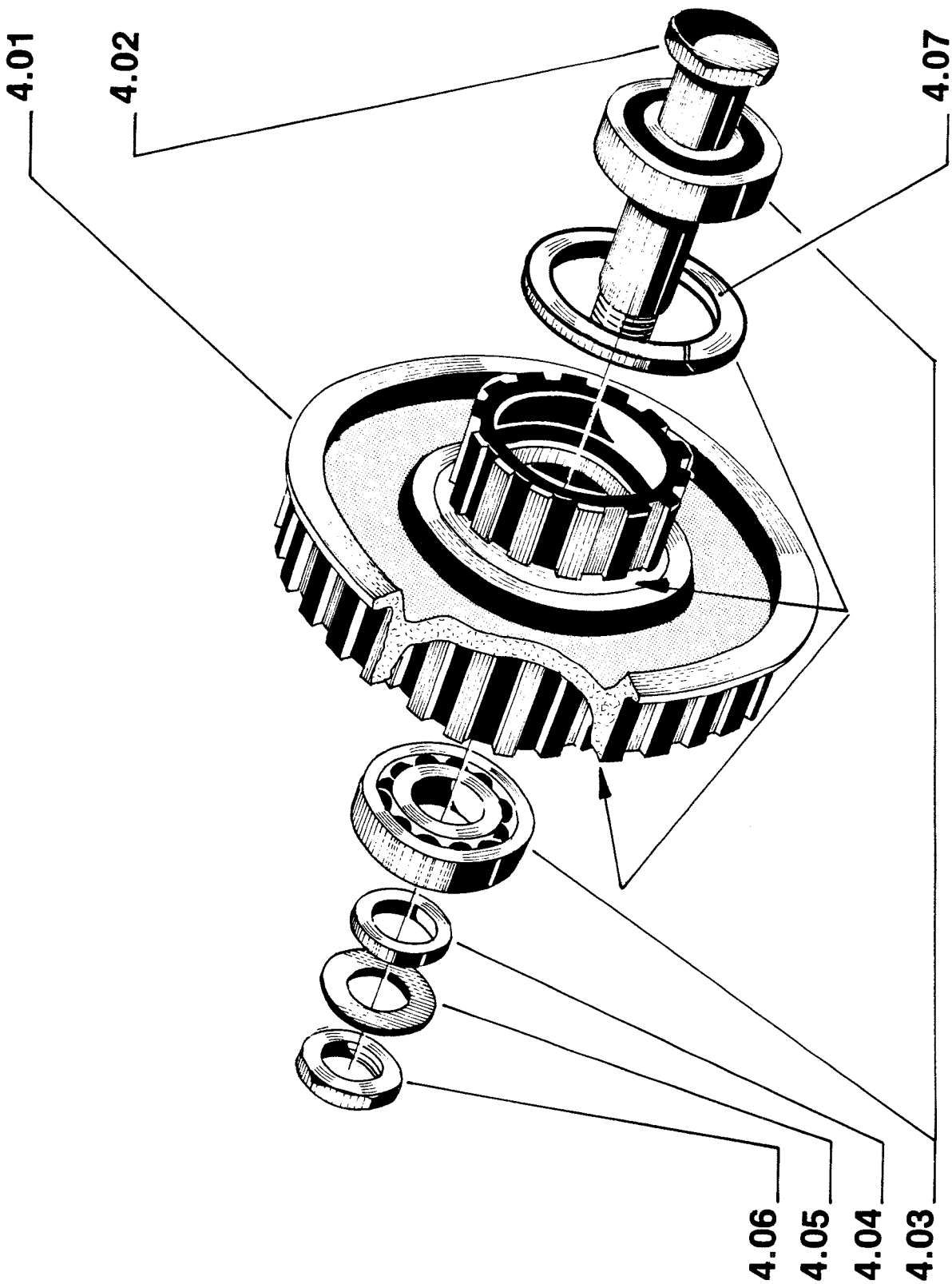

Figure 4

REF. No.	3M PART No.	DESCRIPTION
4-01	78-8017-9024-3	Pulley - Timing Belt, Z-14/32/14
4-02	78-8017-9026-8	Shaft - Pulley
4-03	26-1000-4350-9	Bearing - 6002-2RS
4-04	78-8017-9021-9	Washer - Special, 25mm x 12mm
4-05	78-8017-9059-9	Washer - For M12 Screw DIN 125A
4-06	78-8017-9022-7	Nut - Special, M12 x 1
4-07	78-8017-9025-0	Washer - Nylon

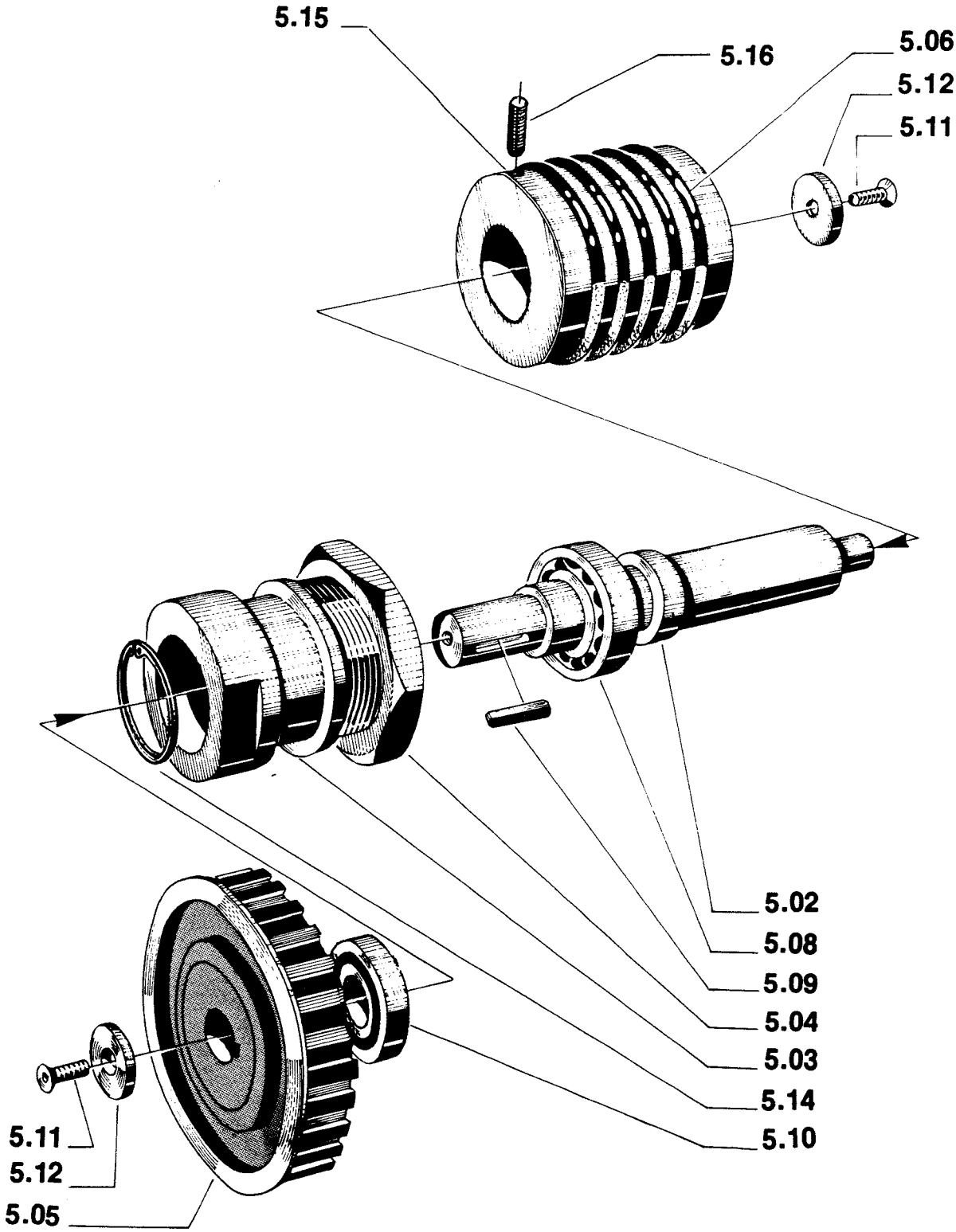

Figure 5

REF. No.	3M PART No.	DESCRIPTION
5-02	78-8017-9029-2	Shaft - Tape Prestripper
5-03	78-8017-9030-0	Hub - Eccentric Prestripper
5-04	78-8017-9031-8	Nut - Hub Attachment
5-05	78-8017-9032-6	Pulley - Prestripper Z-28
5-06	78-8017-9062-3	Washer - O-Ring 150mm
5-08	26-1000-6036-2	Bearing - 6003-2RS
5-09	78-8017-9064-9	Key - 5 x 5 x 15mm
5-10	26-1000-4350-9	Bearing - 6002-2RS
5-11	78-8017-9161-3	Screw - Allen FH M4 x 10
5-12	78-8017-9033-4	Washer - 20mm
5-14	78-8017-9419-5	Ring - Snap for 32mm Hole
5-15	78-8023-2565-0	Roller - Tape Prestripper
5-16	78-8023-2479-4	Screw - Set w/end Cup, M6x10

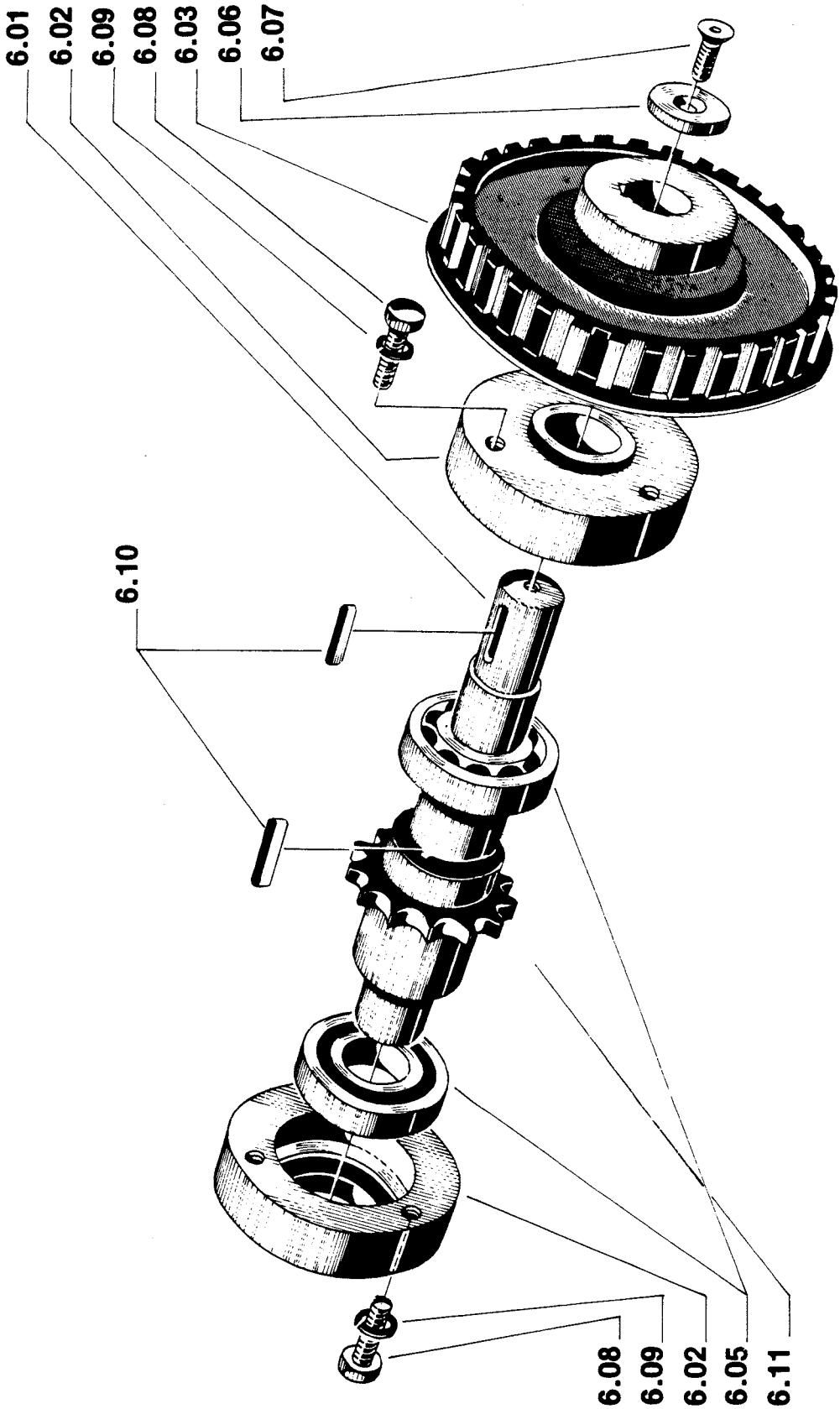

Figure 6

REF. No.	3M PART No.	DESCRIPTION
6-01	78-8017-9035-9	Shaft - Transmission
6-02	78-8017-9036-7	Hub - Shaft Support
6-03	78-8017-9037-5	Pulley - Timing Belt, Z-32
6-05	26-1000-6036-2	Bearing 6003-2RS
6-06	78-8017-9033-4	Washer - 20mm
6-07	78-8017-9161-3	Screw - Allen FH M4 x 10
6-08	78-8032-0375-7	Screw - Metric, M6 x 16, Hex Hd. Cap, Steel, Nick. Pl., DIN 933-5.6
6-09	78-8010-7435-8	Washer - Metric, Lock, Spr., M6
6-10	78-8017-9064-9	Key - 5 x 5 x 15mm
6-11	78-8018-7708-1	Sprocket - 3/8 Inch Pitch, 13 Teeth.

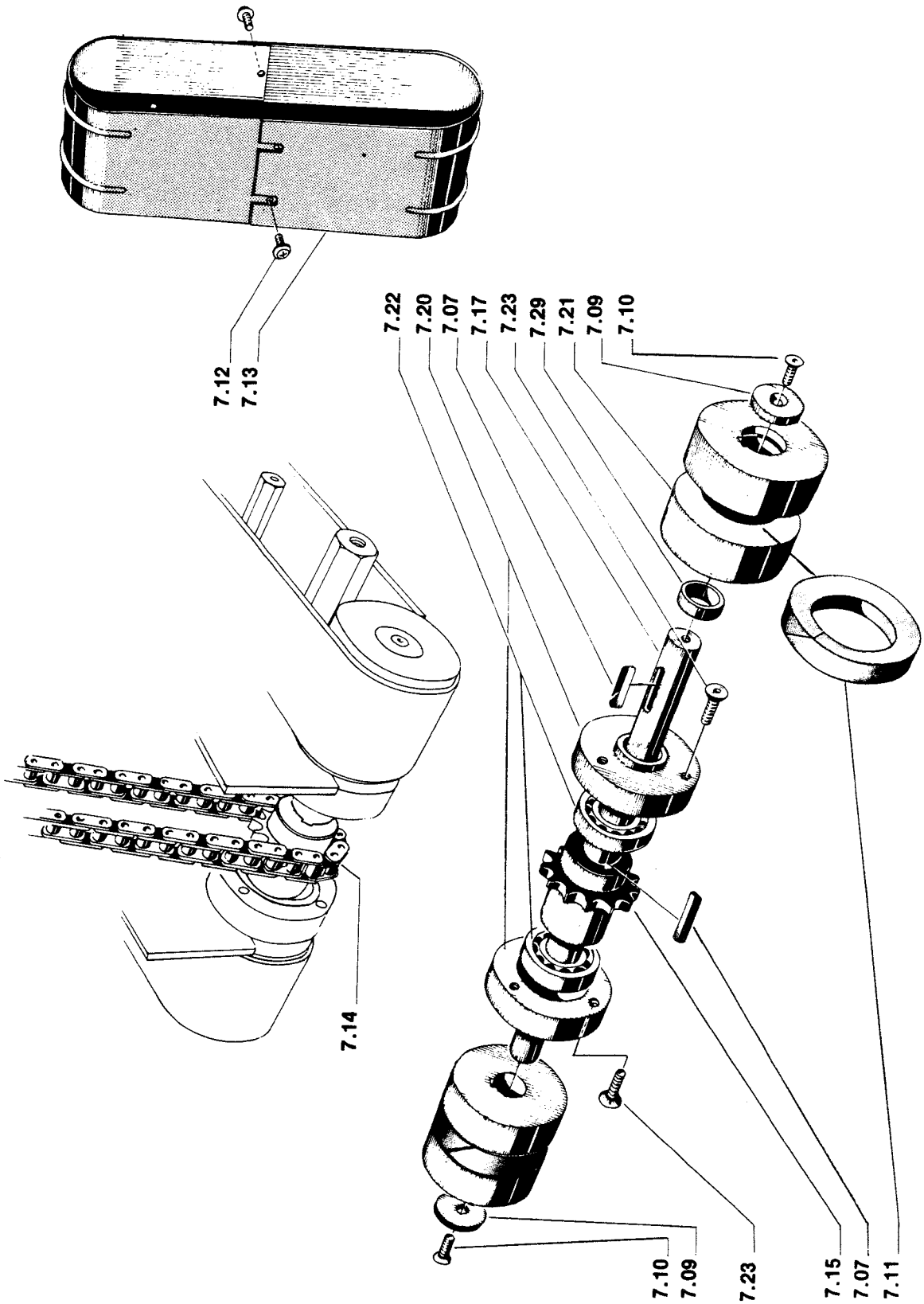
7.12
7.13
7.14
7.22
7.20
7.07
7.17
7.23
7.29
7.21
7.09
7.10
7.10
7.09
7.23
7.15
7.07
7.11

Figure 7

REF. No.	3M PART No.	DESCRIPTION
7-07	78-8017-9064-9	Key - 5 x 5 x 15mm
7-09	78-8017-9033-4	Washer - 20mm
7-10	78-8017-9161-3	Screw - Allen FH M4 x 10
7-11	78-8017-9043-3	Ring - Friction
7-12	78-8017-9066-4	Screw - Special M5 x 10
7-13	78-8017-9044-1	Guard - Belt
7-14	78-8018-7709-9	Chain - Roller, 3/8 Inch Pitch, 47 Links.
7-15	78-8018-7710-7	Sprocket - 3/8 Inch Pitch, 15 Teeth.
7-17	78-8018-7802-2	Shaft-Drive Pulley
7-20	78-8023-2542-9	Hub - Shaft Support
7-21	78-8023-2543-7	Pulley - Keyed
7-22	78-8023-2544-5	Bearing - 6203-2RS
7-23	78-8017-9333-8	Screw - Allen FH, M5x15
7-29	78-8023-2480-2	Spacer - Drive Shaft, 17ø/20øx9 mm thk.

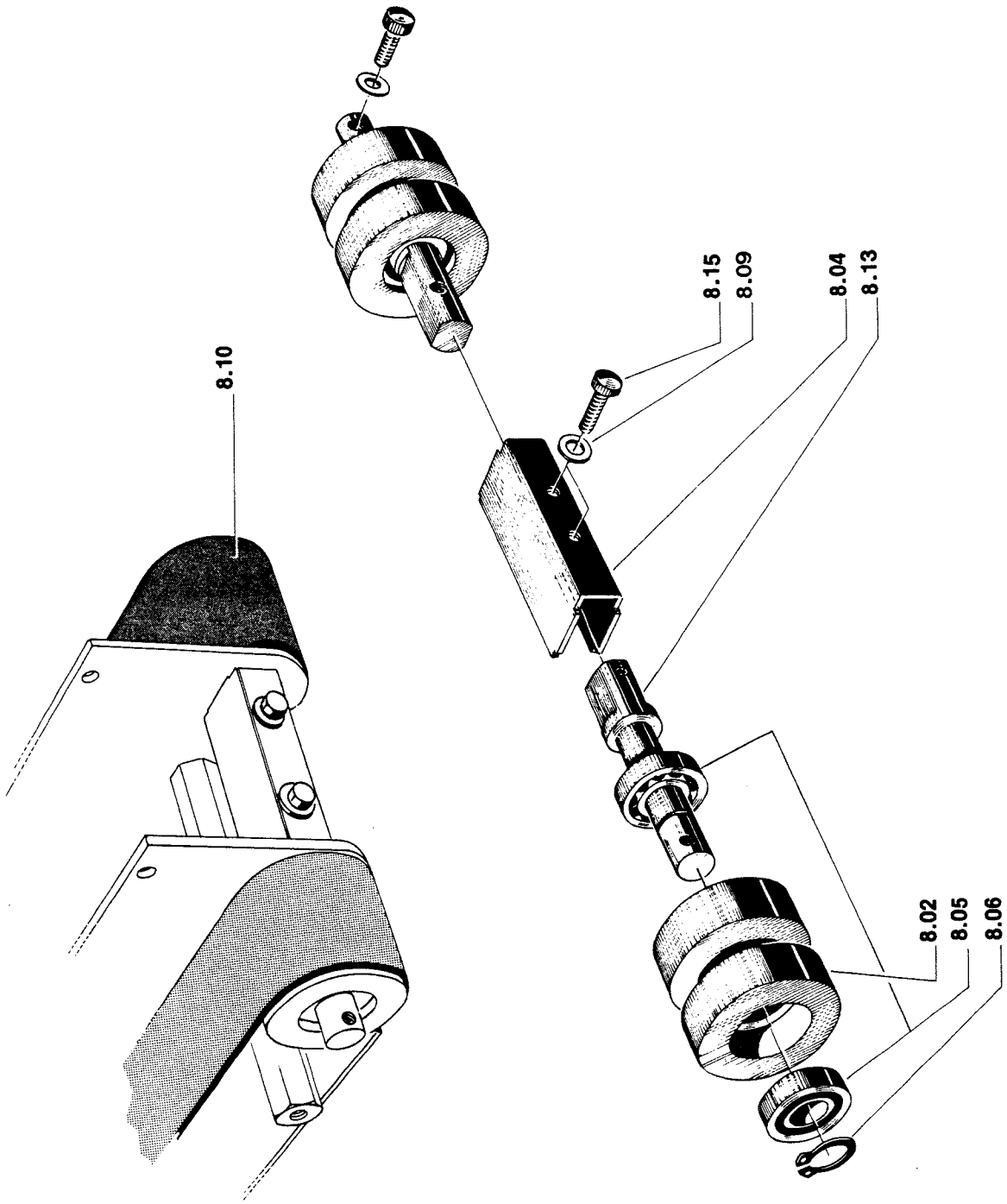

Figure 8

REF. No.	3M PART No.	DESCRIPTION
8-02	78-8017-9046-6	Pulley - Grooved
8-04	78-8017-9048-2	Bracket - Pivot
8-05	26-1000-4350-9	Bearing - 6002- 2RS
8-06	78-8017-9079-7	Ring - Snap for 15mm Shaft
8-09	78-8010-7435-8	Washer - Metric, Lock, Spr., Steel; M6
8-10	78-8017-9049-0	Belt - Box Drive
8-13	78-8023-2545-2	Shaft - Idler Pulley
8-15	78-8018-7725-5	Screw - Hex. Hd., M6 x 35, Nick. Pl.

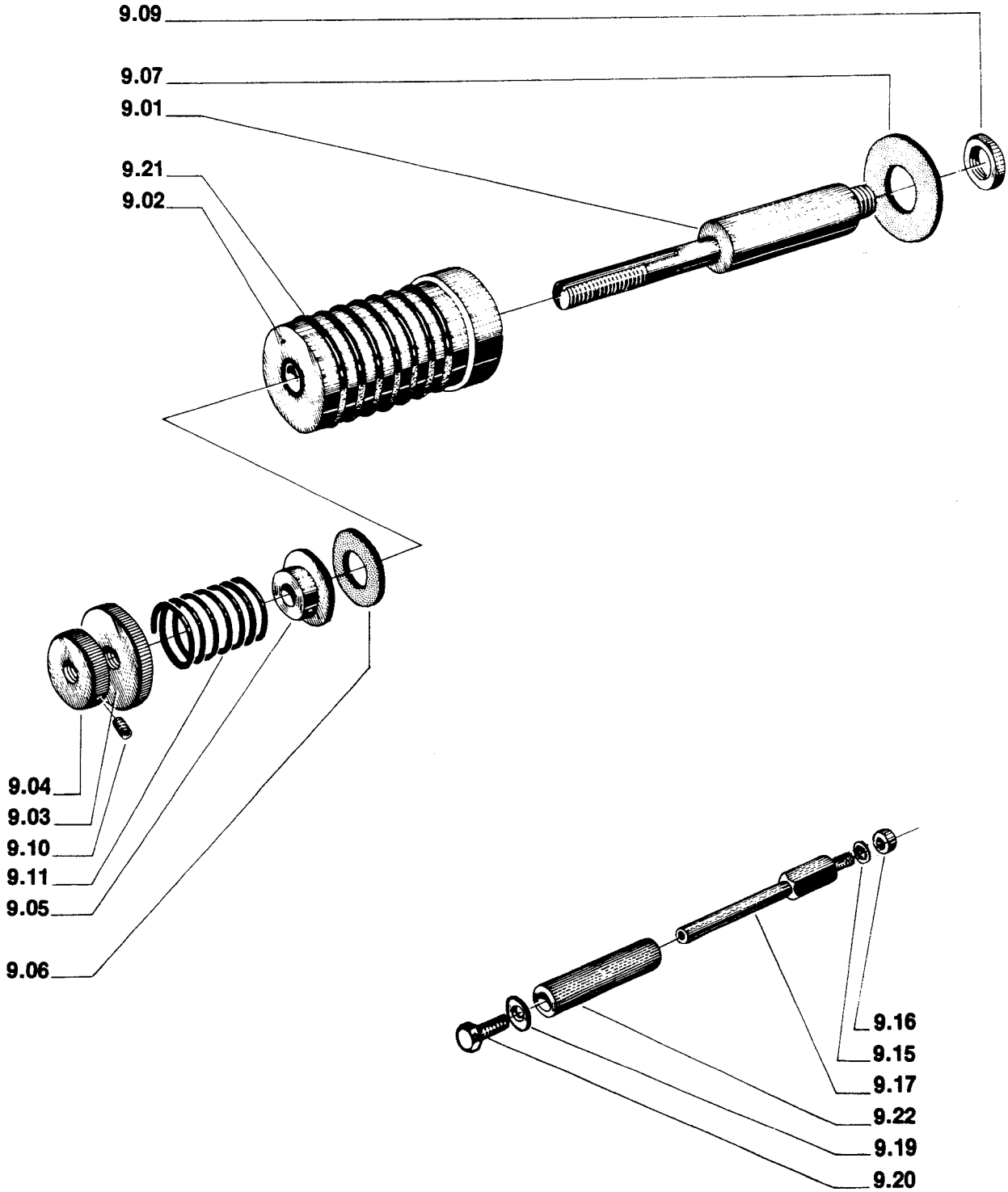
9.09
9.07
9.01
9.21
9.02
9.04
9.03
9.10
9.11
9.05
9.06
9.16
9.15
9.17
9.22
9.19
9.20

Figure 9

REF. No.	3M PART No.	DESCRIPTION
9-01	78-8017-9050-8	Shaft - Tensioning Roller
9-02	78-8017-9051-6	Roller Assembly - Tensioning
9-03	78-8017-9053-2	Nut - Round, Adjusting
9-04	78-8017-9054-0	Nut - Round, Locking
9-05	78-8017-9055-7	Holder Assembly - Friction Washer
9-06	78-8017-9067-2	Washer - Friction, 30mm
9-07	78-8017-9068-0	Washer - Friction, 44mm
9-09	78-8017-9022-7	Nut - Special, M12 x 1
9-10	78-8017-9073-0	Screw - Set, Allen M4 x 8
9-11	78-8017-9071-4	Spring
9-15	78-8010-7435-8	Washer - Metric, Lock, Spr., Steel M6
9-16	78-8010-7418-4	Nut - Metric, Hex, Steel, M6
9-17	78-8017-9085-4	Shaft - Knurled Roller
9-19	78-8017-9018-5	Washer - Metric, Plain, Steel, M4 (Special)
9-20	78-8010-7157-8	Screw - Hex Head M4 x 10
9-21	78-8017-9175-3	Washer - O-Ring 138mm
9-22	78-8023-2481-0	Roller Assembly - Knurled

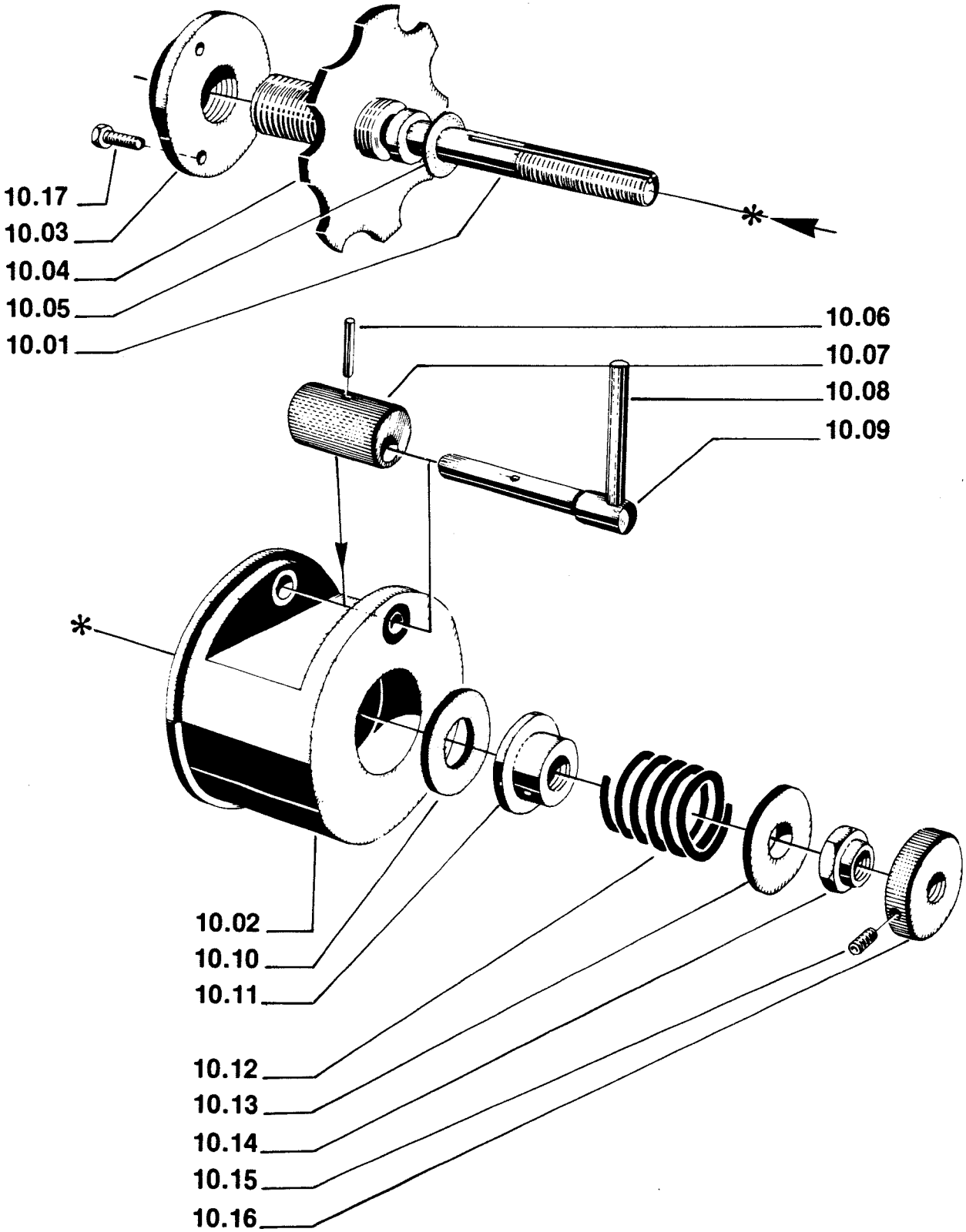
10.17
10.03
10.04
10.05
10.01
*
10.06
10.07
10.08
10.09
*
10.02
10.10
10.11
10.12
10.13
10.14
10.15
10.16

Figure 10

REF. No.	3M PART No.	DESCRIPTION
10-01	78-8017-9087-0	Shaft - Tape Drum
10-02	78-8017-9088-8	Drum Assembly - Tape
10-03	78-8017-9090-4	Flange - Tape Drum Shaft - Support
10-04	78-8017-9091-2	Plate - Locking, Tape Drum Shaft
10-05	78-8017-9074-8	Washer - Nylon 10,5ø/18øx1 mm thk.
10-06	78-8017-9017-7	Pin - Roll ø3x16 mm.
10-07	78-8017-9092-0	Roller - Eccentric
10-08	78-8017-9075-5	Pin - Roll ø5x50 mm.
10-09	78-8017-9093-8	Pivot - For Eccentric Roller
10-10	78-8017-9067-2	Washer - Friction, 30mm
10-11	78-8017-9055-7	Holder - Friction Washer
10-12	78-8017-9071-4	Spring
10-13	78-8017-9094-6	Washer - Spring Holder
10-14	78-8017-9077-1	Nut - Self-Locking, M-10, Nick. Pl.
10-15	78-8017-9073-0	Screw - Set, Allen Head M4 x 8
10-16	78-8017-9054-0	Nut - Round, Locking.
10-17	78-8010-7157-8	Screw - Hex Head M4 x 10

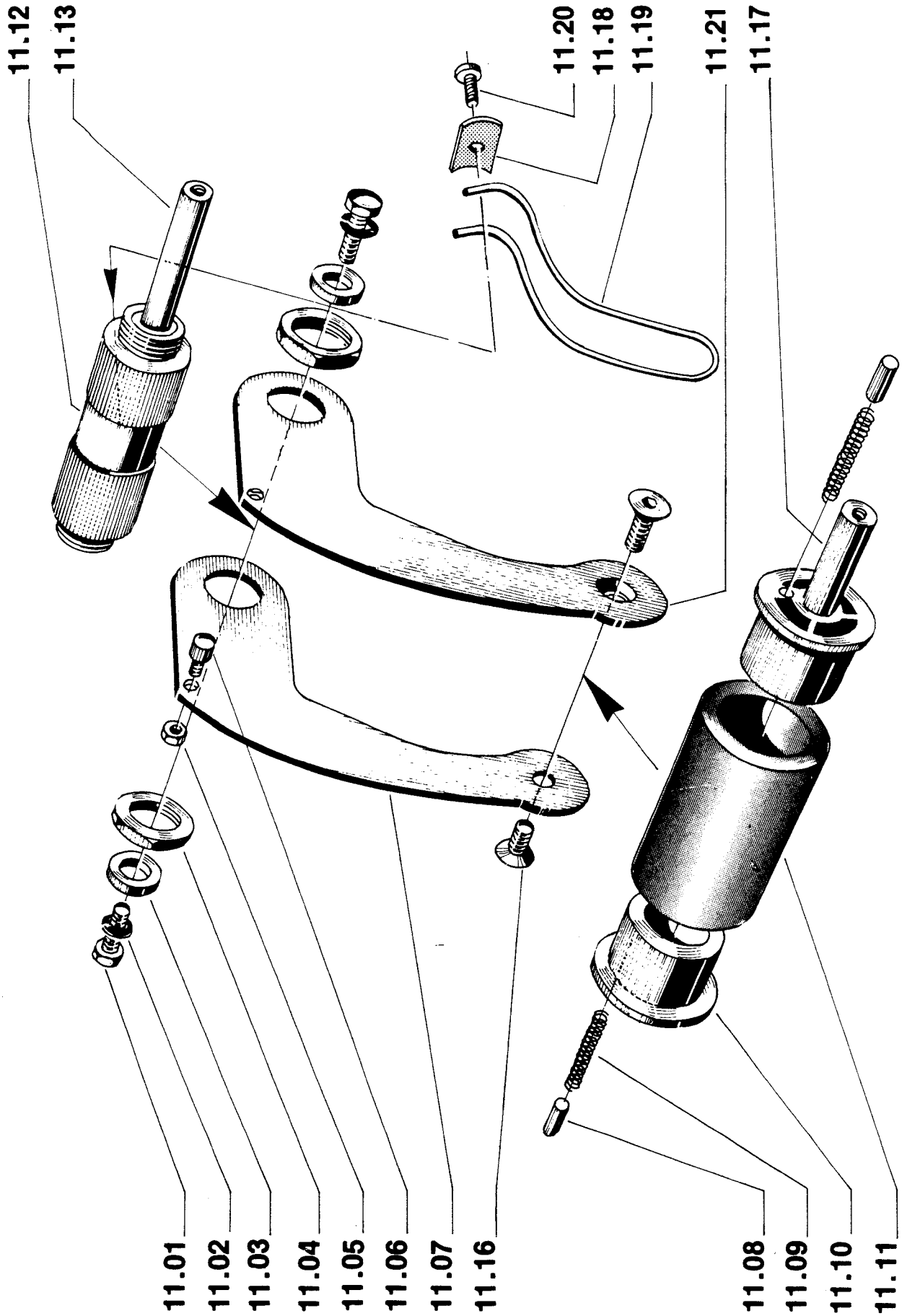
11.12
11.13
11.20
11.18
11.19
11.21
11.17
11.01
11.02
11.03
11.04
11.05
11.06
11.07
11.16
11.08
11.09
11.10
11.11

Figure 11

REF. No.	3M PART No.	DESCRIPTION
11-01	78-8032-0375-7	Screw - Metric, M6 x 16, Hex Hd. Cap, Steel, Nick. Pl., DIN 933-5.6
11-02	78-8010-7435-8	Washer - Metric, Lock, Spr., Steel M6
11-03	78-8017-9095-3	Spacer
11-04	78-8017-9096-1	Nut - Special M18 x 1'
11-05	78-8010-7417-6	Nut - Metric, Hex, Steel, M5
11-06	78-8017-9097-9	Pin - Follower
11-07	78-8017-9076-3	Arm - Applying Roller, Right Side
11-08	78-8017-9098-7	Pin - Friction, 5mm
11-09	78-8017-9100-1	Spring - Friction
11-10	78-8017-9099-5	Bushing - Applying Roller
11-11	78-8017-9101-9	Roller - Applying
11-12	78-8017-9102-7	Spacer Assembly - Applying Roller Arms
11-13	78-8017-9078-9	Shaft - 10 x 90mm
11-16	78-8017-9162-1	Screw - Allen FH, M6 x 12
11-17	78-8017-9105-0	Shaft - 10 x 66mm
11-18	78-8017-9364-3	Clamp - Tape Support Spring
11-19	78-8017-9272-8	Spring - Tape Support
11-20	78-8017-9257-9	Screw - Phillips Head, M4 x 10
11-21	78-8017-9430-2	Arm - Applying Roller, Left Side

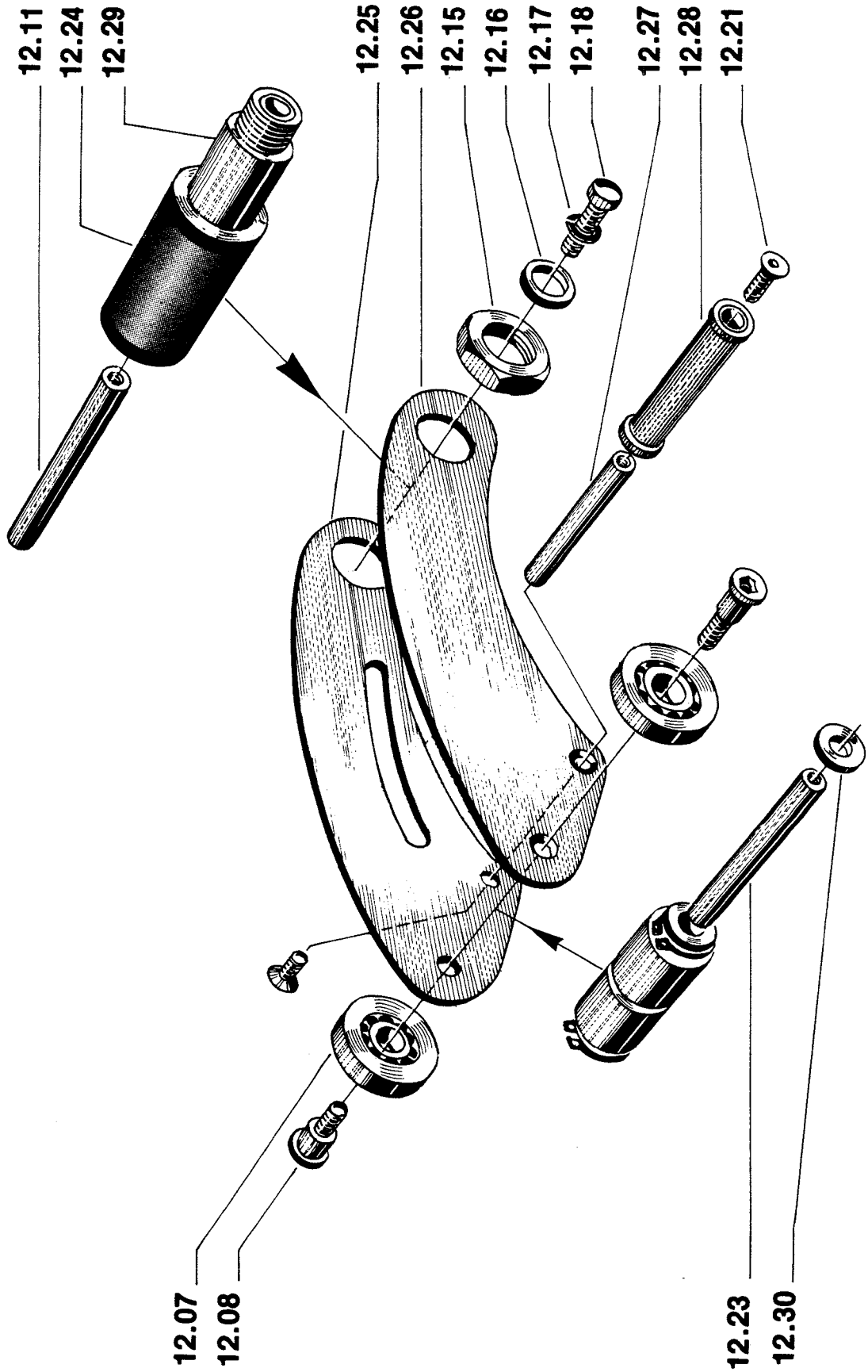
12.11
12.24
12.29
12.25
12.26
12.15
12.16
12.17
12.18
12.27
12.28
12.21
12.07
12.08
12.23
12.30

Figure 12

REF. No.	3M PART No.	DESCRIPTION
12-07	78-8017-9082-1	Bearing - Special 30mm
12-08	78-8017-9106-8	Screw - Bearing Shoulder
12-11	78-8017-9109-2	Shaft - 10 x 90mm
12-15	78-8017-9169-6	Nut - M18 x 1
12-16	78-8017-9095-3	Spacer
12-17	78-8010-7435-8	Washer - Metric, Lock, Spr., Steel M6
12-18	78-8032-0375-7	Screw - Metric, M6 x 16, Hex Hd. Cap, Steel, Nick. Pl., DIN 933-5.6
12-21	78-8017-9170-4	Screw - Phillips FH, M4 x 8
12-23	78-8018-7847-7	Shaft - 10 x 57 mm.
12-24	78-8018-7848-5	Roller Assembly - Tape Guide
12-25	78-8018-7849-3	Side Plate - w/Slot - One Way Roller Right.
12-26	78-8018-7850-1	Side Plate - One Way Roller Left.
12-27	78-8018-7851-9	Shaft - 8 x 57 mm.
12-28	78-8018-7852-7	Roller Assembly - One Way - Knurled.
12-29	78-8018-7853-5	Shaft Assembly - Tape Guide Roller.
12-30	78-8018-7854-3	Spacer - 16ø/10,5øx1,5 mm thk.

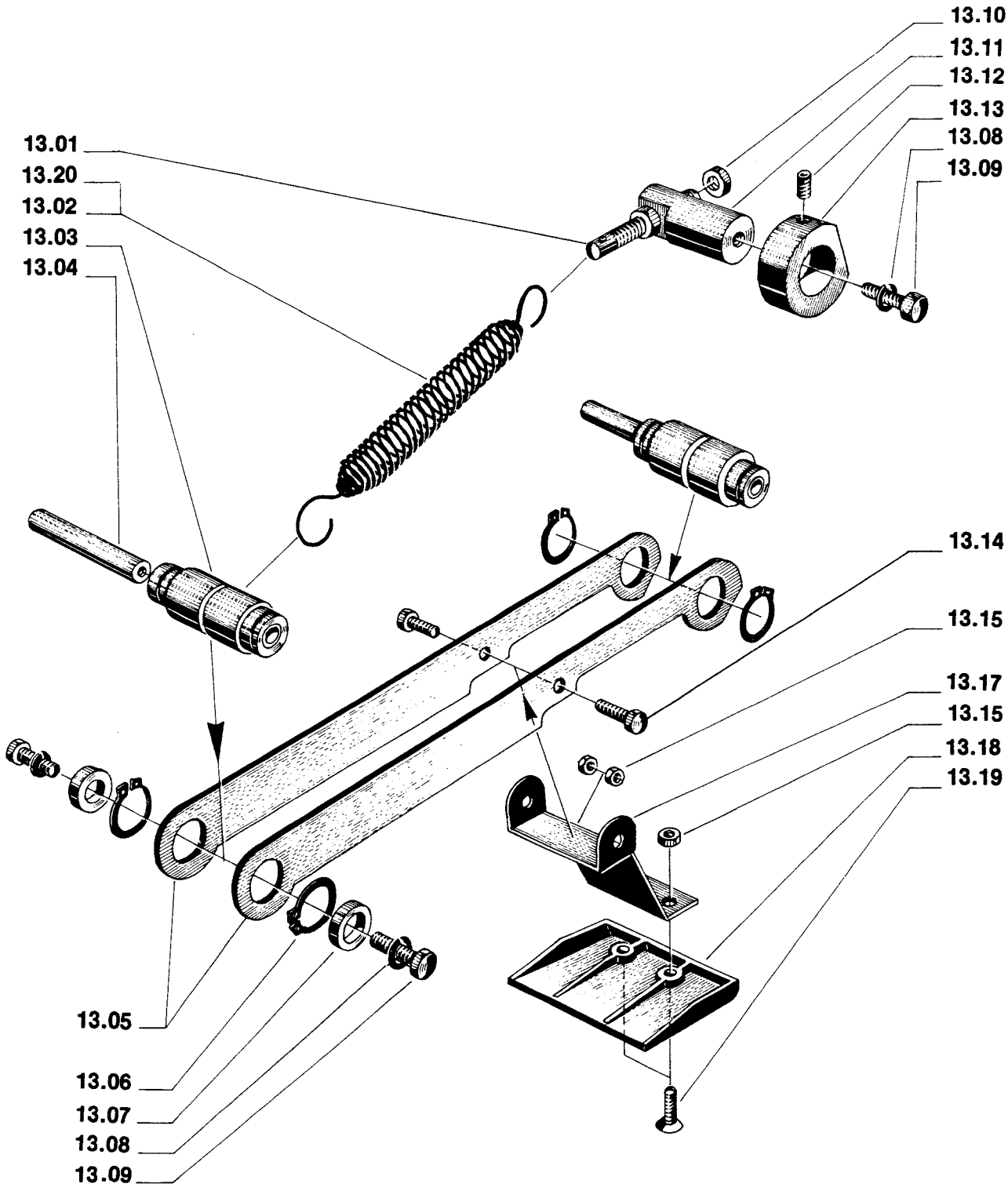
13.10
13.11
13.12
13.13
13.08
13.09
13.01
13.20
13.02
13.03
13.04
13.14
13.15
13.17
13.15
13.18
13.19
13.05
13.06
13.07
13.08
13.09

Figure 13

REF. No.	3M PART No.	DESCRIPTION
13-01	78-8017-9118-3	Screw - Spring Tensioner
13-02	78-8017-9119-1	Spring - Main, Top Head, Zinc Pl.
13-03	78-8017-9120-9	Roller Assembly - Grooved
13-04	78-8017-9105-0	Shaft - 10 x 66mm
13-05	78-8017-9122-5	Lever
13-06	78-8017-9171-2	Ring - Snap for 18mm
13-07	78-8017-9123-3	Spacer
13-08	78-8010-7435-8	Washer - Metric, Lock, Spr., Steel M6
13-09	78-8032-0375-7	Screw - Metric, M6 x 16, Hex Hd. Cap, Steel, Nick. Pl., DIN 933-5.6
13-10	26-1000-1347-8	Nut - Metric Hex Stl., M8
13-11	78-8017-9124-1	Holder - Main Spring
13-12	78-8023-2479-4	Screw - Set w/end Cup, M6x10
13-13	78-8017-9125-8	Collar - Retainer
13-14	78-8010-7163-6	Screw - Hex Head, M5 x 10, Nick. Pl. DIN 933-8.8
13-15	78-8010-7417-6	Nut - Metric, Hex, Steel, M5, Nick. Pl.
13-16	78-8005-5735-3	Washer - Metric, Lock, Spr., Steel M5
13-17	78-8017-9126-6	Bracket - Blade guard
13-18	78-8017-9127-4	Guard - Blade
13-19	78-8017-9333-8	Screw - Allen FH, M5 x 15
13-20	78-8017-9424-5	Spring, Main, Bottom Head

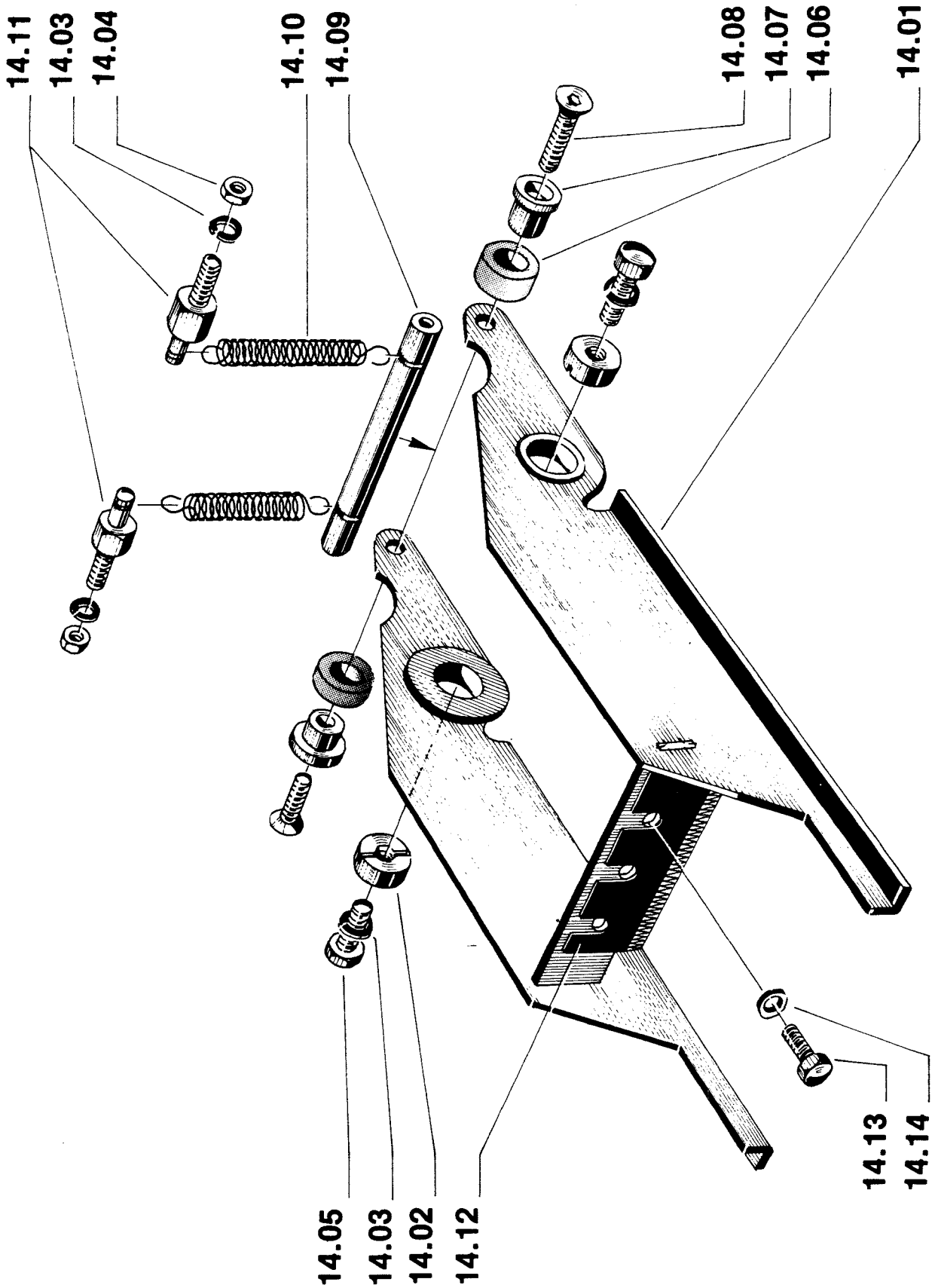
14.11
14.03
14.04
14.10
14.09
14.08
14.07
14.06
14.01
14.05
14.03
14.02
14.12
14.13
14.14

Figure 14

REF. No.	3M PART No.	DESCRIPTION
14-01	78-8017-9128-2	Lever Assembly - Cutter
14-02	78-8017-9132-4	Pivot - Cutter Lever
14-03	78-8010-7435-8	Washer - Metric, Lock, Spr., Steel - M6
14-04	78-8010-7418-4	Nut - Metric, Hex, Steel, M6
14-05	78-8010-7169-3	Screw - Metric, M6 x 12, Hex Hd. Cap, Steel, Nick. Pl., DIN 933-8.8
14-06	78-8017-9133-2	Bumper
14-07	78-8017-9134-0	Bushing - Bumper
14-08	78-8017-9172-0	Screw - Allen FH, M5 x 20
14-09	78-8017-9135-7	Pin - Spring Holder
14-10	78-8017-9136-5	Spring - Cutter
14-11	78-8017-9137-3	Holder - Cutter Spring
14-12	78-8017-9173-8	Blade - 2,56 inch/65mm
14-13	78-8010-7163-6	Screw - Metric, M5 x 10, Hex Hd. Cap, Steel, Nick. Pl., DIN 933-8.8
14-14	78-8005-5741-1	Washer - Metric, Plain, Steel, M5

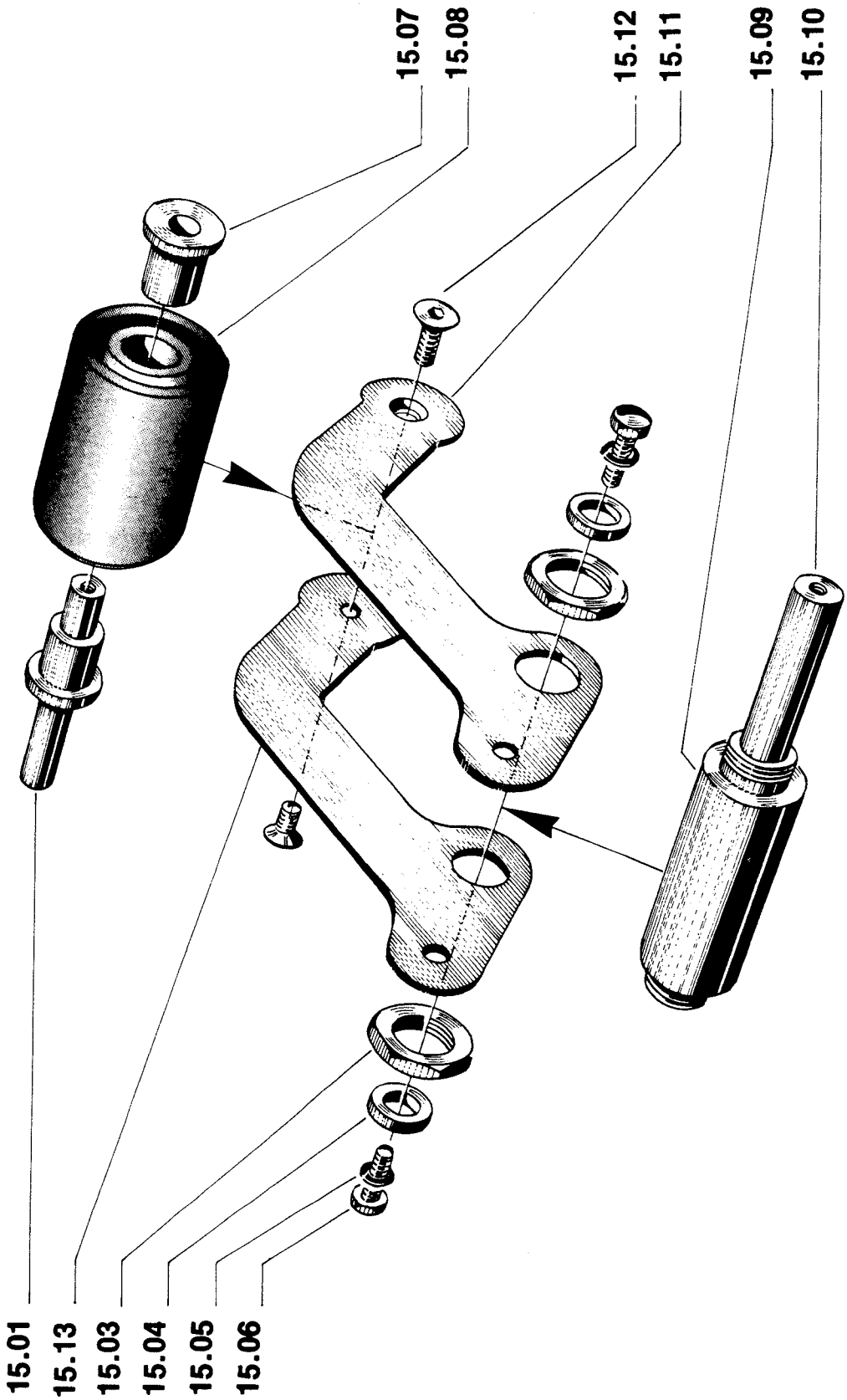

Figure 15

REF. No.	3M PART No.	DESCRIPTION
15-01	78-8017-9105-0	Shaft - 10 x 66mm
15-03	78-8017-9096-1	Nut - Special, M18 x 1
15-04	78-8017-9095-3	Spacer
15-05	78-8010-7435-8	Washer - Metric, Lock, Spr. Steel - M6
15-06	78-8032-0375-7	Screw - Metric, M6 x 16, Hex Hd. Cap, Steel, Nick. Pl., DIN 933-8.8
15-07	78-8017-9139-9	Bushing - Buffing Roller
15-08	78-8017-9140-7	Roller - Buffing
15-09	78-8017-9141-5	Spacer Assembly - Buffing Roller Arms
15-10	78-8017-9109-2	Shaft - 10 x 90mm
15-11	78-8018-7608-3	Arm - Buffing Roller, Left.
15-12	78-8017-9162-1	Screw - Allen FH, M6 x 12.
15-13	78-8018-7609-1	Arm - Buffing Roller, Right.

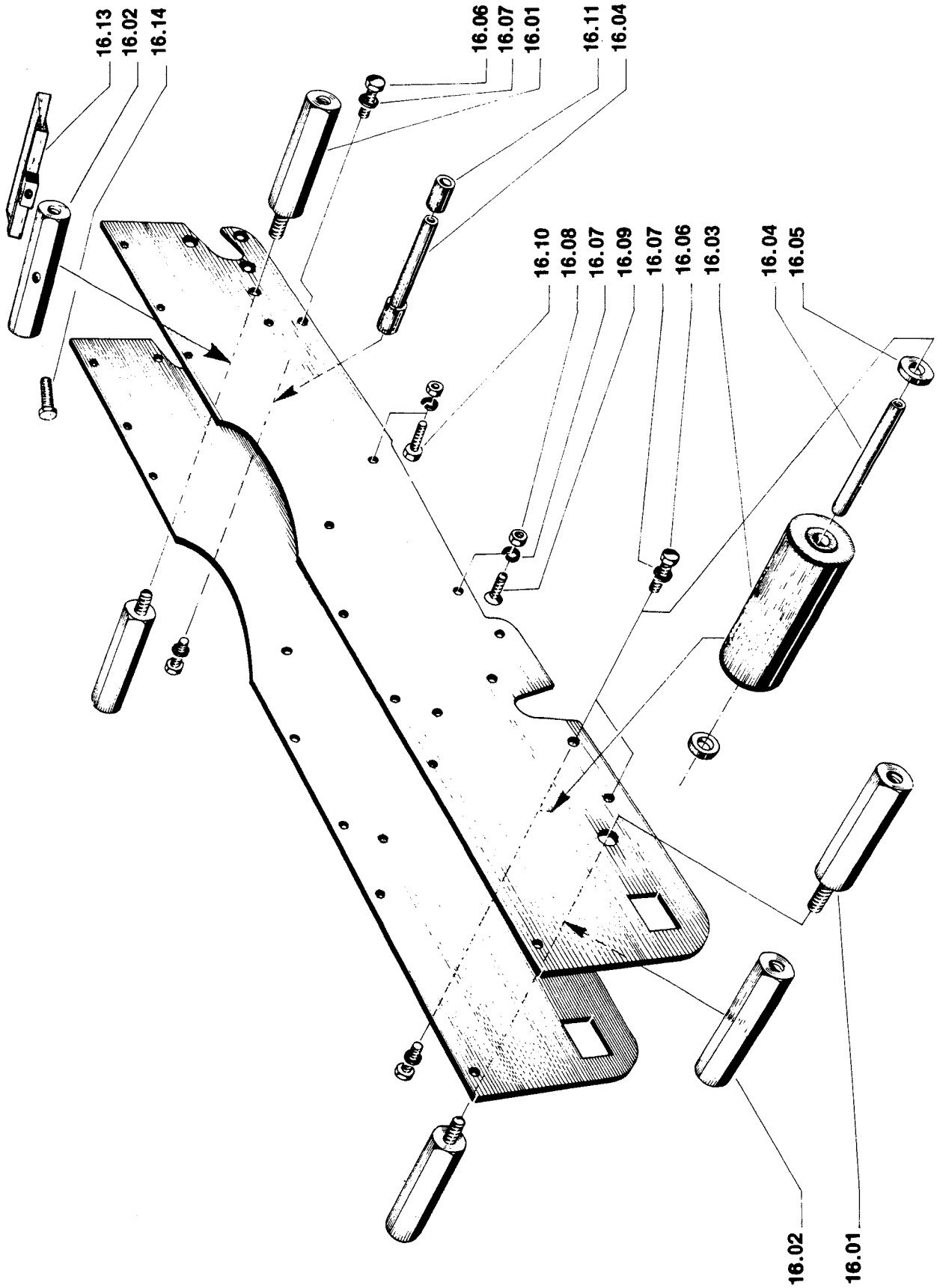
16.13
16.02
16.14
16.06
16.07
16.01
16.11
16.04
16.10
16.08
16.07
16.09
16.07
16.06
16.03
16.04
16.05
16.02
16.01

Figure 16

REF. No.	3M PART No.	DESCRIPTION
16-01	78-8017-9143-1	Pin - Attachment
16-02	78-8017-9144-9	Spacer - Hexagonal
16-03	78-8017-9145-6	Roller Assembly - 38mm Diameter
16-04	78-8017-9109-2	Pin - 10 x 90mm
16-05	78-8017-9095-3	Spacer
16-06	78-8032-0375-7	Screw - Metric, M6 x 16, Hex Hd. Cap, Steel, Nick. Pl., DIN 933-8.8
16-07	78-8010-7435-8	Washer - Metric, Lock, Spr., Steel - M6
16-08	78-8010-7418-4	Nut - Metric, Hex Steel, M6
16-09	78-8017-9334-6	Screw - Allen FH, M6 x 20
16-10	78-8017-9331-2	Screw - Metric, M6 x 20, Hex Hd. Cap, Steel, Black Zinc, DIN 933-8.8
16-11	78-8017-9148-0	Bumper - Buffing Arm
16-13	78-8018-7617-4	Brush - Assembly - Buffing.
16-14	78-8018-7616-6	Screw - Metric, M5 x 25, Hex Hd. Cap.

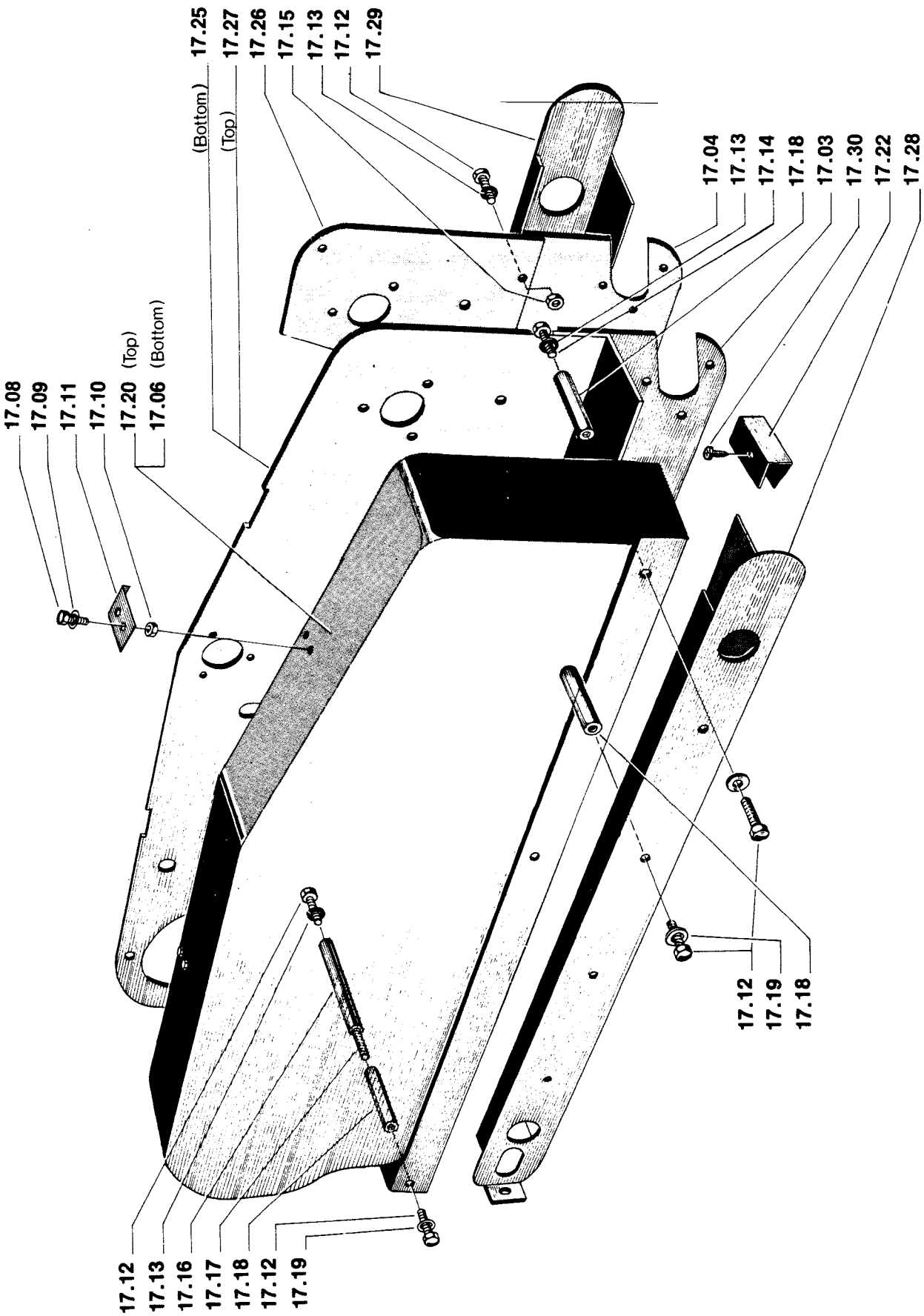
17.25 (Bottom)
17.27 (Top)
17.26
17.15
17.13
17.12
17.29
17.04
17.13
17.14
17.18
17.03
17.30
17.22
17.28
17.08
17.09
17.11
17.10
17.20 (Top)
17.06 (Bottom)
17.12
17.19
17.18
17.12
17.13
17.16
17.17
17.18
17.12
17.19

Figure 17

REF. No.	3M PART No.	DESCRIPTION
17-03	78-8017-9153-0	Sideplate - Right side
17-04	78-8017-9154-8	Sideplate - Left Side
17-06	78-8017-9176-1	Cover - Main Drive Belts, Bottom Head
17-08	78-8010-7157-8	Screw - Hex Head, M4 x 10
17-09	78-8005-5740-3	Washer - Metric Plain, Steel M4
17-10	78-8010-7416-8	Nut - Metric, Hex, Steel, M4
17-11	78-8017-9156-3	Retainer Clip - Main Belt Cover
17-12	78-8032-0375-7	Screw - Metric, M6 x 16, Hex Hd. Cap, Steel, Nick. Pl., DIN 933-8.8
17-13	78-8010-7435-8	Washer - Metric, Lock, Spr., Stl., M-6
17-14	78-8017-9331-2	Screw - Metric, M6 x 20, Hex Hd., Cap, Steel, Black Zinc, DIN 933-8.8
17-15	78-8010-7418-4	Nut - Metric, Hex, Steel, M6
17-16	78-8017-9109-2	Shaft - 10 x 90mm
17-17	78-8017-9174-6	Set Screw - Allen, M6 x 30
17-18	78-8017-9157-1	Pin - Hexagonal ,55 mm lg.
17-19	78-8023-2478-6	Washer - Metric, 6,2 ID x 18 OD x 1,5 mm thk.
17-20	78-8017-9158-9	Cover - Main Drive Belt, Top Head
17-22	78-8018-7614-1	Guard - Belt.
17-25	78-8018-7715-6	Sideplate Assembly - Main Bottom Head.
17-26	78-8018-7716-4	Sideplate - Short.
17-27	78-8018-7717-2	Sideplate Assembly - Main Top Head.
17-28	78-8023-2546-0	Belt - Support Right.
17-29	78-8023-2547-8	Belt - Support Left.
17-30	78-8017-9425-2	Screw - Self-Tapping, 8x13mm.

7A - CASE SEALER, MODEL 37900
FRAME ASSEMBLIES

1) Refer to Frame Assemblies figure to find all parts illustrations identified by figure numbers.

2) Refer to the figure or figures to determine the individual parts required and the parts reference number.

3) The replacement parts list, that follows each illustration, includes the part number and part description for the parts in the illustration.

> NOTE - The complete description has been included for standard fasteners and some commercially available components. This has been done to allow obtaining these standard parts locally, should the customer elect to do so.

4) Refer to page 23 of "Maintenance - Parts Orders and Service Information" section of this manual for replacement parts ordering information.

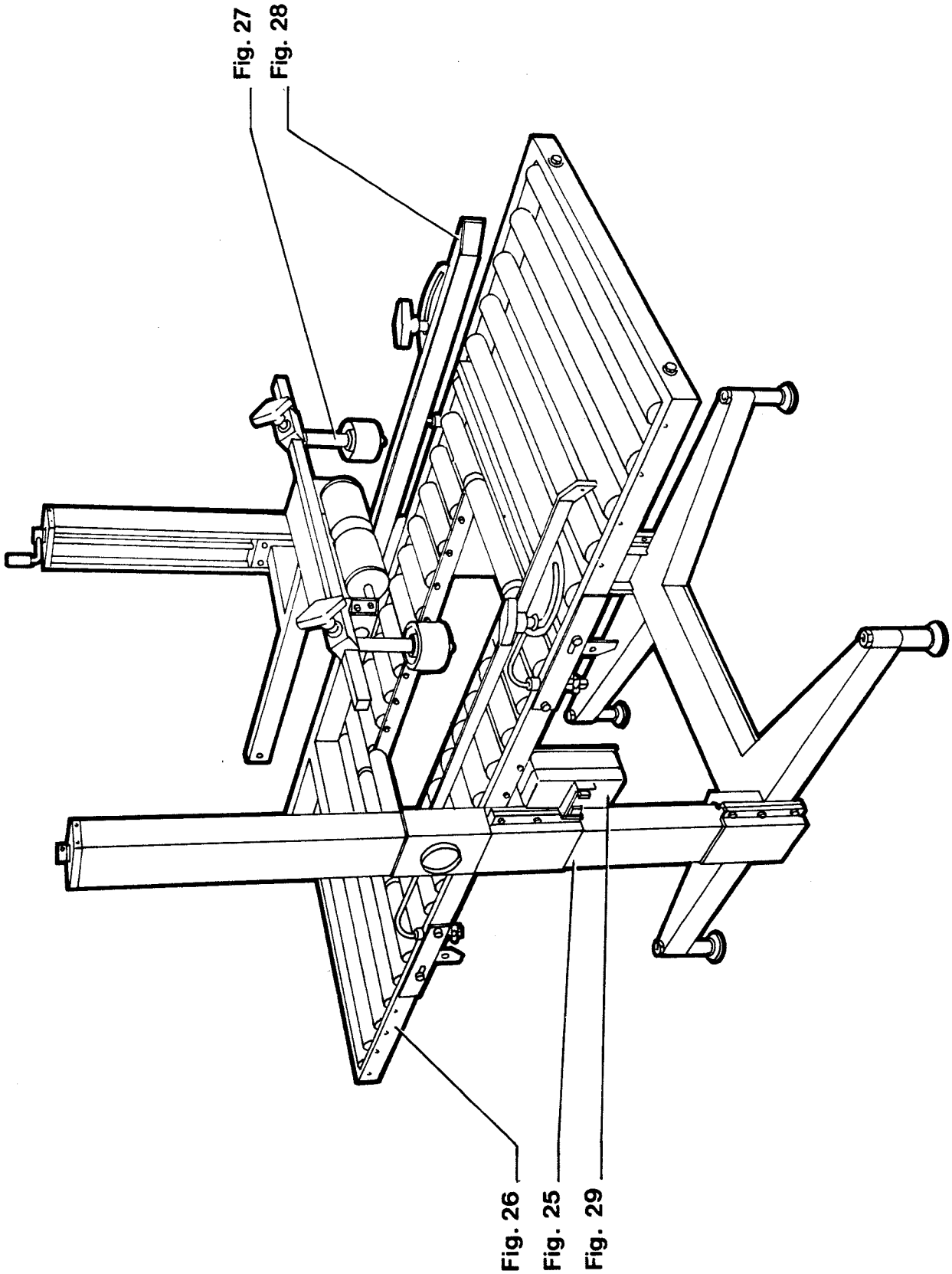

Frame Assemblies

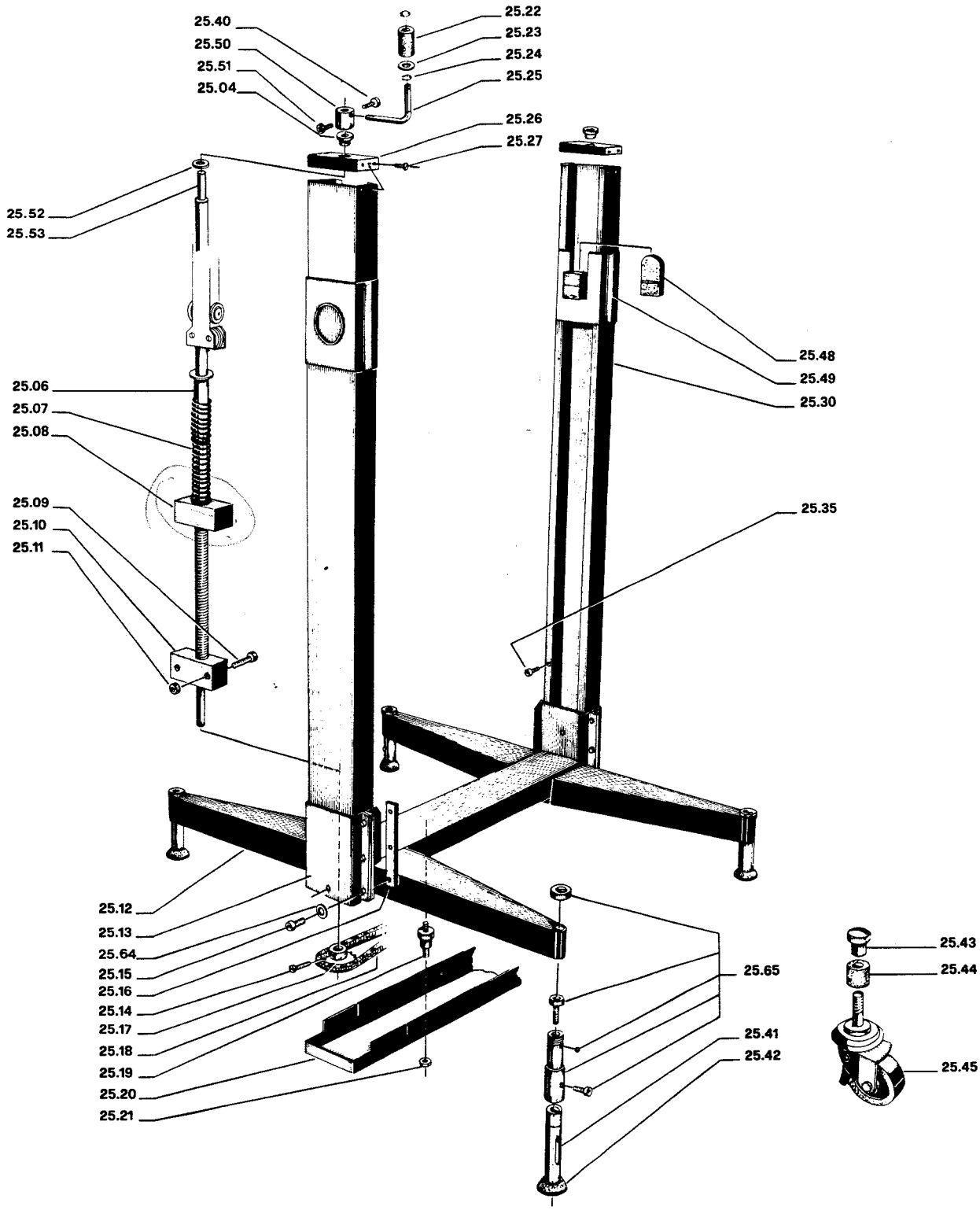
25.40
25.50
25.51
25.04
25.22
25.23
25.24
25.25
25.26
25.27
25.52
25.53
25.48
25.49
25.30
25.06
25.07
25.08
25.09
25.10
25.11
25.35
25.12
25.13
25.64
25.15
25.16
25.14
25.17
25.18
25.19
25.20
25.21
25.65
25.41
25.42
25.43
25.44
25.45

Figure 25

REF. No.	3M PART No.	DESCRIPTION
25-04	78-8017-9354-4	Bushing - Flanged
25-06	78-8017-9254-6	Bushing - Flanged
25-07	78-8017-9255-3	Spring - Top Head Support
25-08	78-8017-9256-1	Nut - Height Adjustment
25-09	78-8017-9305-6	Screw - Soc. Hd., Hex Soc. Dr., M6 x 35, Nick. Pl.
25-10	78-8017-9399-9	Block - Support
25-11	78-8017-9307-2	Nut - Self-Locking, M6, Nick. Pl.
25-12	78-8017-9183-7	Base Weldment Assembly - Box Sealer
25-13	78-8017-9420-3	Bracket - Column Clamping, Base
25-14	78-8010-7201-4	Screw - Soc. Hd., Hex Soc. Dr., M4 x 25, Nick. Pl.
25-15	78-8010-7210-5	Screw - Soc. Hd., Hex Soc. Dr., M6 x 20, Nick. Pl.
25-16	78-8017-9181-1	Plate - Threaded
25-17	78-8017-9355-1	Sprocket
25-18	78-8017-9356-9	Chain
25-19	78-8017-9357-7	Spacer
25-20	78-8017-9358-5	Cover - Chain Box
25-21	78-8017-9312-2	Nut - Self-locking, M8, Nick. Pl.
25-22	78-8017-9359-3	Handle
25-23	78-8017-9318-9	Washer - Plain Metric, 8mm, Nick. Pl.
25-24	78-8017-9360-1	Ring - Snap for 8mm Shaft
25-25	78-8017-9362-7	Crank
25-26	78-8017-9363-5	Cover - Column Top
25-27	78-8017-9265-2	Screw - Self-tapping, 3.5 x 10, Nick. Pl.
25-30	78-8017-9366-8	Column
25-35	78-8010-7203-0	Screw - Soc. Hd., Hex Soc. Dr., M5 x 10, Nick. Pl.
25-41	78-8017-9189-4	Shaft - Foot
25-42	78-8017-9212-4	Pad - Foot
25-43	78-8017-9261-1	Nut - Special
25-44	78-8017-9214-0	Bushing - Rubber
25-45	78-8017-9262-9	Caster - W/Wheel Lock
25-48	78-8018-7610-9	Bumper - Top Head
25-49	78-8018-7611-7	Collar - Stop
25-50	78-8018-7724-8	Collar - Handle Attachment.
25-51	78-8032-0379-9	Screw - Soc. Hd., Hex. Soc. Dr., M4x16, Nick. Pl.
25-52	78-8018-7726-3	Washer - Special
25-53	78-8018-7727-1	Screw - Height Adjustment
25-64	78-8018-7799-0	Washer - Special, M6
25-65	78-8018-7665-3	Bushing - Foot - Assembly

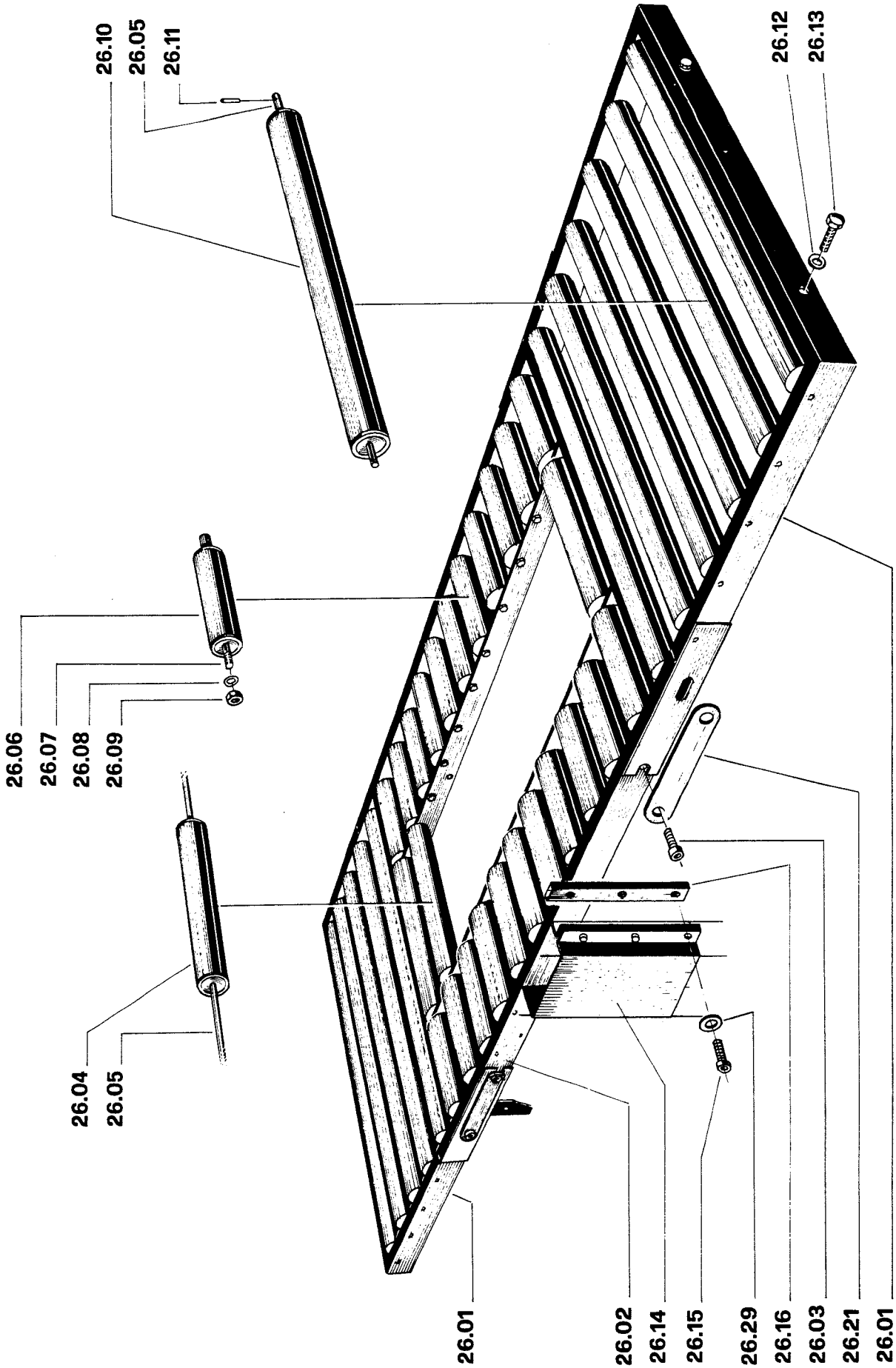
26.10
26.05
26.11
26.12
26.13
26.06
26.07
26.08
26.09
26.04
26.05
26.01
26.02
26.14
26.15
26.29
26.16
26.03
26.21
26.01

Figure 26

REF. No.	3M PART No.	DESCRIPTION
26-01	78-8017-9190-2	Frame Weldment Assembly - Conveyor Extention.
26-02	78-8017-9370-0	Frame Weldment Assembly - Central Conveyor
26-03	78-8017-9302-3	Screw - Soc. Hd., Hex Soc. Dr., M8 x 20, Nick. Pl.
26-04	78-8017-9223-1	Roller - Conveyor, 32 x 248mm
26-05	78-8017-9219-9	Shaft - For 32 x 562mm roller
26-06	78-8017-9218-1	Roller - Conveyor, 32 x 152mm
26-07	78-8017-9220-7	Shaft - For 32 x 152mm Roller
26-08	78-8005-5741-1	Washer - Metric Plain Stl., Nick. Pl., 5mm
26-09	78-8010-7417-6	Nut - Metric, Hex Stl., M5, Nick. Pl.
26-10	78-8017-9215-7	Roller - Conveyor, 32 x 562mm
26-11	78-8010-7458-0	Pin - Metric, Tension Stl., Black Zinc, 3 x 10mm
26-12	78-8017-9318-9	Washer - Metric Plain, Stl., Nick. Pl. 8mm
26-13	78-8017-9324-7	Screw - Hex Hd., M8 x 15, Nick. Pl.
26-14	78-8017-9182-9	Bracket - Column Clamping
26-15	78-8010-7210-5	Screw - Soc. Hd., Hex Soc. Dr., M6 x 20, Nick. Pl.
26-16	78-8017-9181-1	Plate - Threaded
26-21	78-8018-7747-9	Plate - Conveyor Guide.
26-29	78-8018-7799-0	Washer - Special, M6

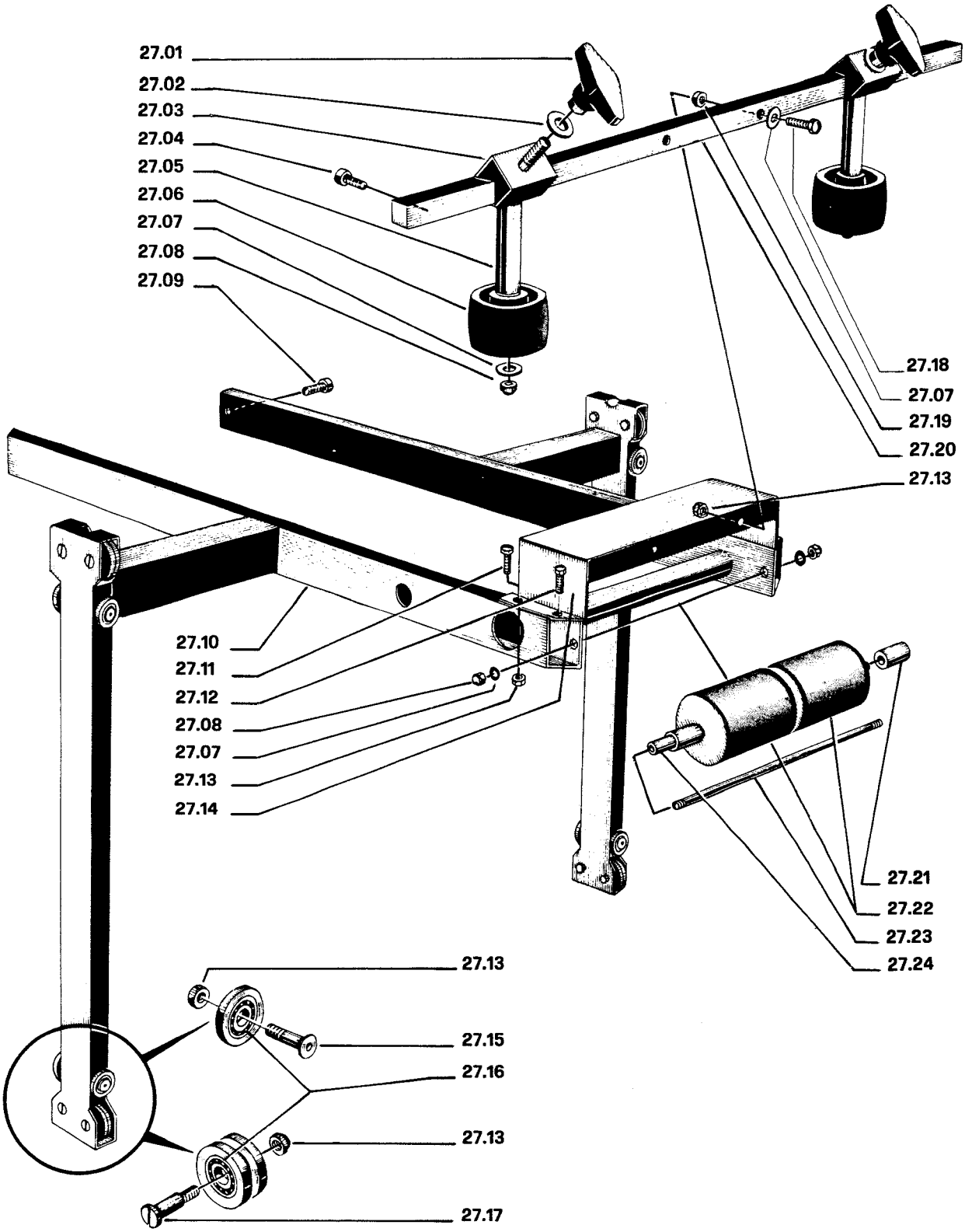
27.01
27.02
27.03
27.04
27.05
27.06
27.07
27.08
27.09
27.18
27.07
27.19
27.20
27.13
27.10
27.11
27.12
27.08
27.07
27.13
27.14
27.21
27.22
27.23
27.24
27.13
27.15
27.16
27.13
27.17

Figure 27

REF. No.	3M PART No.	DESCRIPTION
27-01	78-8017-9392-4	Knob
27-02	78-8017-9319-7	Washer - Flat, 10mm, Nick. Pl.
27-03	78-8017-9376-7	Slide - Roller Support
27-04	78-8010-7199-0	Screw - Soc. Hd., Hex Soc. Dr., M4 x 10, Nick. Pl.
27-05	78-8017-9397-3	Shaft Weldment Assembly - Roller Support
27-06	78-8017-9398-1	Roller Assembly - Rubber
27-07	78-8017-9330-4	Washer - Special
27-08	78-8017-9310-6	Nut - Cap, M6, Nick. Pl.
27-09	78-8017-9303-1	Screw - Soc. Hd., Hex Soc. Dr., M10 x 20, Nick. Pl.
27-10	78-8017-9377-5	Support Weldment Assembly - Top Taping Head
27-11	78-8017-9325-4	Screw - Hex Hd., M6 x 15, Nick. Pl.
27-12	78-8010-7169-3	Screw - Hex Hd., M6 x 12, Stl. Nick. Pl., DIN 933-8.8
27-13	78-8017-9307-2	Nut - Self-locking, M6, Nick. Pl.
27-14	78-8017-9378-3	Support - Roller Bar
27-15	78-8017-9306-4	Screw - Allen, FH, M6 x 20mm
27-16	78-8017-9298-3	Bearing - 25 x 6mm
27-17	78-8017-9379-1	Screw - Shoulder for Bearing
27-18	78-8017-9327-0	Screw - Hex Hd., M6 x 30, Nick. Pl.
27-19	78-8017-9380-9	Spacer
27-20	78-8017-9381-7	Bar - Roller
27-21	78-8017-9382-5	Spacer
27-22	78-8017-9207-4	Roller - 60 x 82mm
27-23	78-8017-9201-7	Shaft - Roller Sleeve
27-24	78-8017-9208-2	Bushing - Roller Sleeve

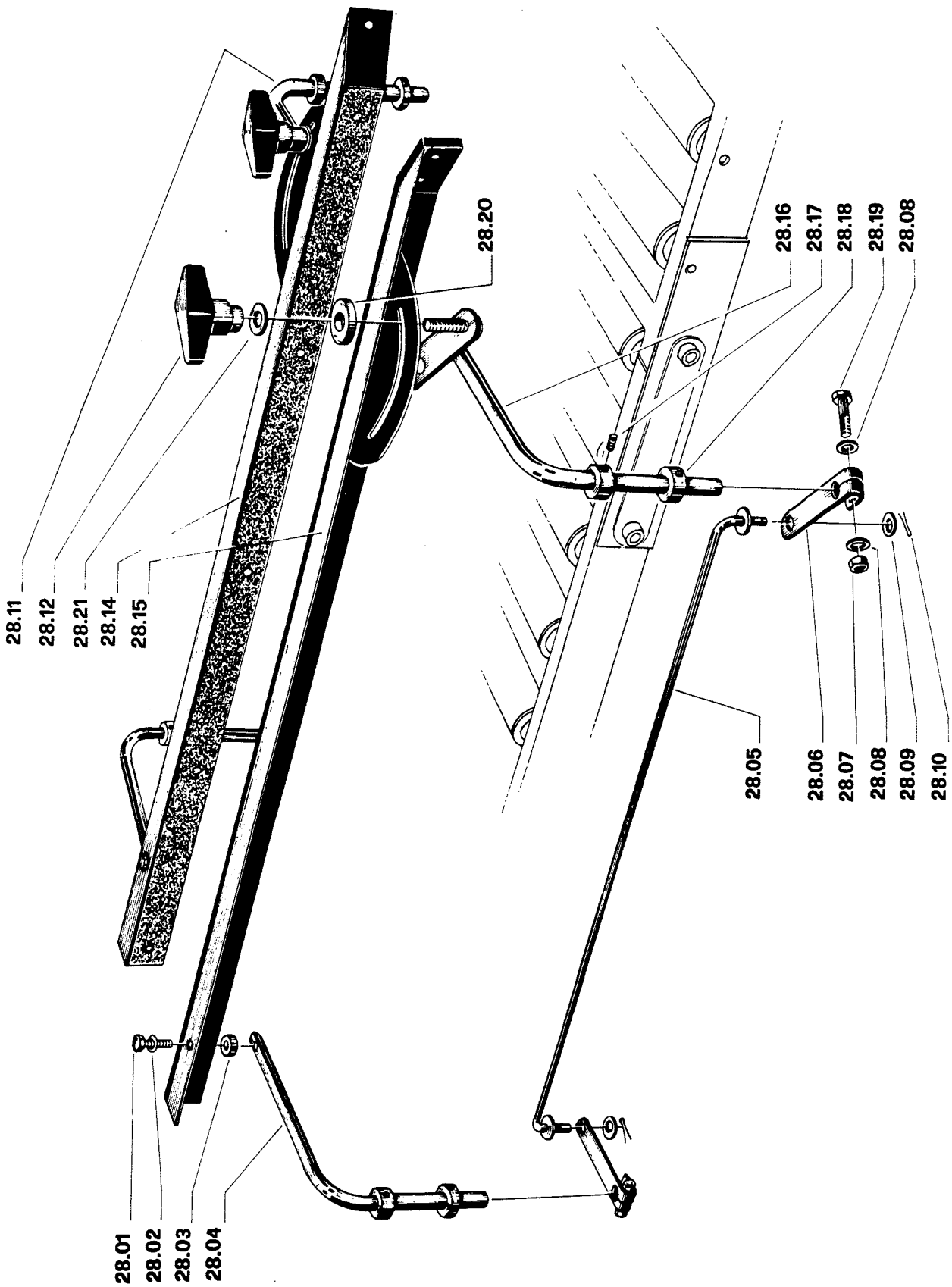
28.11
28.12
28.21
28.14
28.15
28.20
28.16
28.17
28.18
28.19
28.08
28.05
28.06
28.07
28.08
28.09
28.10
28.01
28.02
28.03
28.04

Figure 28

REF. No.	3M PART No.	DESCRIPTION
28-01	78-8017-9331-2	Screw - Hex Hd., M6 x 20, Nick. Pl.
28-02	78-8017-9332-0	Washer - Special
28-03	78-8017-9386-6	Spacer
28-04	78-8017-9387-4	Arm - Discharge End
28-05	78-8017-9388-2	Rod Weldment Assembly - Connecting
28-06	78-8017-9389-0	Lever
28-07	78-8017-9307-2	Nut - Self-locking, M6, Nick. Pl.
28-08	26-1000-0010-3	Washer - Flat, 6mm, Nick. Pl.
28-09	78-8017-9318-9	Washer - Plain Metric, 8mm, Nick.Pl.
28-10	78-8017-9390-8	Pin - Cotter
28-11	78-8017-9391-6	Arm Weldment Assembly - Infeed End, Right Side
28-12	78-8017-9392-4	Knob
28-14	78-8017-9393-2	Guide Assembly - Right Side
28-15	78-8017-9394-0	Guide Assembly - Left Side
28-16	78-8017-9395-7	Arm Weldment Assembly - Infeed End, Left Side
28-17	78-8017-9328-8	Set Screw - Allen Head, M8 x 8
28-18	78-8017-9396-5	Collar - Stop
28-19	78-8017-9327-0	Screw - Hex Hd., M6 x 30, Nick. Pl.
28-20	78-8018-7744-6	Washer - Special, 10 mm.
28-21	78-8018-7745-3	Washer - Spring, 10 mm.

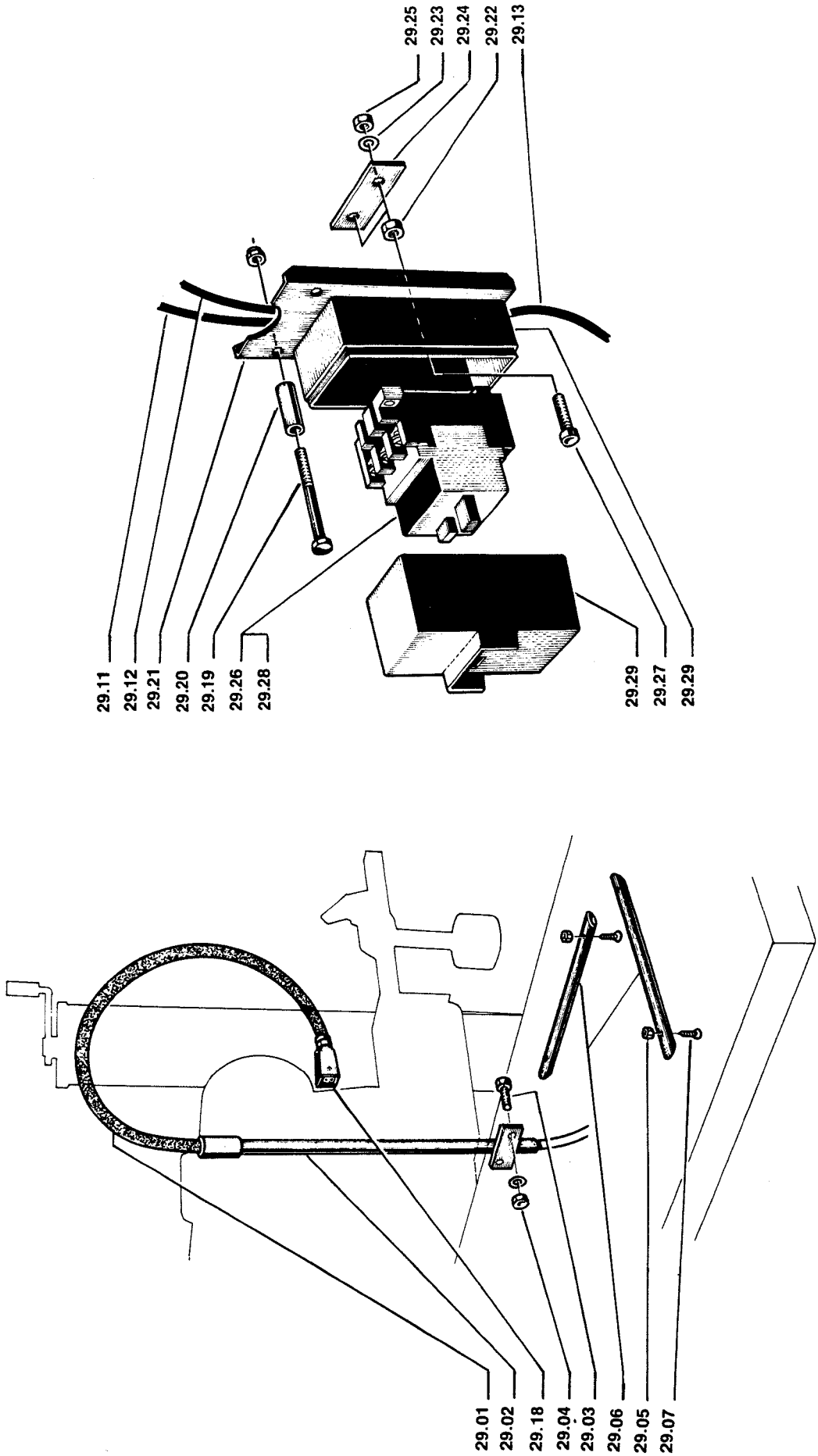
29.25
29.23
29.24
29.22
29.13
29.11
29.12
29.21
29.20
29.19
29.26
29.28
29.29
29.27
29.29
29.01
29.02
29.18
29.04
29.03
29.06
29.05
29.07

Figure 29

REF. No.	3M PART No.	DESCRIPTION
29-01	78-8017-9199-3	Sleeving - 19mm Diameter, 2100 mm Lg.
29-02	78-8017-9429-4	Holder Weldment Assembly
29-03	78-8017-9305-6	Screw - Soc. Hd., Hex Soc. Dr., M6 x 35, Nick. Pl.
29-04	78-8017-9307-2	Nut - Self-locking, M6, Nick. Pl.
29-05	78-8017-9309-8	Nut - Self-locking, M4, Nick. Pl.
29-06	78-8017-9383-3	Tube - Cable
29-07	78-8017-9384-1	Screw - Allen FH, M4 x 12
29-11	78-8017-9374-2	Cable - 1.3 metres
29-12	78-8017-9375-9	Cable - 3.5 metres
29-13A	78-8005-7933-2	Power Cord - U.S.
29-13B	78-8017-9404-7	Power Cord - European
29-18	78-8017-9013-6	Plug
29-19	78-8017-9400-5	Screw - Hex Hd., Stl., M6 x 55, Nick. Pl.
29-20	78-8017-9401-3	Spacer
29-21	78-8017-9405-4	Plate - Siemens Switch Mounting
29-22	78-8017-9311-4	Nut - Self-locking, M5, Nick. Pl.
29-23	78-8005-5741-1	Washer - Plain, Metric, M5, Nick. Pl.
29-24	78-8017-9402-1	Plate - Clamp
29-25	78-8010-7417-6	Nut - Metric, Hex Stl., M5, Nick. Pl.
29-26	78-8017-9403-9	Switch - Electric On/Off, Siemens, 4,0 ÷ 6,3 Amp.
29-27	78-8010-7206-3	Screw - Soc. Hd., Hex Soc. Dr., M5 x 25, Nick. Pl.
29-28	78-8017-9421-1	Switch - Electric On/Off, Siemens, 1,6 ÷ 2,5 Amp.
29-29	78-8017-9422-9	Switch box, Plastic, Siemens