Instructions and Parts List

3M-Matic™

700r Random Case Sealer with AccuGlide™ II Taping Heads

Type 39600

Important Safety Information

Read "Important Safeguards", pages 3-6 and also operating "Warnings", page 19 BEFORE INSTALLING OR OPERATING THIS EQUIPMENT.

Spare Parts

It is recommended you immediately order the spare parts listed on page 37, Section I and page 17, Section II. These parts are expected to wear through normal use and should be kept on hand to minimize production delays.

Serial No. _____

For reference, record machine serial number here.

3M Packaging Systems Division

3M Center, Building 220-8W-01
St. Paul, MN 55144-1000

"3M-Matic"and "AccuGlide" are Trademarks of 3M, St. Paul, MN 55144-1000

Litho in U.S.A.

© 3M 1999 44-0009-1907-4 (D29.00)

To Our Customers:

This is the 3M-Matic™/AccuGlide™/Scotch™ brand equipment you ordered. It has been set up and tested in the factory with "Scotch" brand tapes. If technical assistance or replacement parts are needed, call or Fax the appropriate number listed below.

Included with each machine is an Instructions and Parts List manual.

Technical Assistance:

3M-Matic™ Helpline – 1-800/328 1390. Please provide the customer support coordinator with the machine number, machine type/model and serial number. If you have a technical question that does not require an immediate response, you may Fax it to 715/381 0248.

Replacement Parts and Additional Manuals

Order parts by part number, part description and quantity required. Also, when ordering parts and/or additional manuals, include machine name, number and type. A parts order form is provided at the back of this manual.

3M/Tape Dispenser Parts
241 Venture Drive **1-800/344 9883**
Amery, WI 54001-1325 **FAX# 715/268 8153**

Minimum billing on parts orders will be $25.00. Replacement part prices available on request.
$10.00 restocking charge per invoice on returned parts.
Note : Outside the U.S., contact the local 3M subsidiary for parts ordering information.

3M

3M Packaging Systems Division
3M Center, Building 220-8W-01
St. Paul, MN 55144-1000

"3M-Matic", "AccuGlide" and "Scotch" are trademarks of 3M, St. Paul, Minnesota 55144-1000

Printed in U.S.A.

© 3M 1999 44-0009-1851-4(E79.0)

To Our Customers:

This is the 3M-Matic™/AccuGlide™/Scotch™ brand equipment you ordered. It has been set up and tested in the factory with "Scotch" brand tapes. If any problems occur when operating this equipment, and you desire a service call, or phone consultation, call, write or Fax the appropriate number listed below.

Included with each machine is an Instructions and Parts List manual.

SERVICE, REPLACEMENT PARTS AND ADDITIONAL MANUALS AVAILABLE DIRECT FROM:

Order parts by part number, part description and quantity required. Also, when ordering parts and/or additional manuals, include machine name, number and type.

3M Packaging Systems Division

3M Center, Building 220-8W-01
St. Paul, MN 55144-1000
1-800/328 1390

"3M-Matic", "AccuGlide" and "Scotch" are trademarks of 3M, St. Paul, Minnesota 55144-1000

Printed in U.S.A.

© 3M 1999 44-0009-1852-2(D79.0)

Instruction Manual

700r, Random Case Sealer, Type 39600

This instruction manual is divided into two sections as follows:

Section I Includes all information related to installation, operation and parts for the case sealer.
Section II Includes specific information regarding the AccuGlide™ II STD 2 Inch Taping Heads.

Table of Contents — Page

Section I – 700r Random Case Sealer

Description 1

Equipment Warranty and Limited Remedy 2

700r Contents 2

Important Safeguards ..... 3 - 6

Specifications ..... 7 - 9

Installation and Set-Up ..... 10 - 14
- Receiving and Handling 10
- Machine Set-Up ..... 10 - 14
  - Packaging and Separate Parts ..... 10 - 12
  - Infeed Conveyor Assembly 12
  - Centering Guides 12
  - Machine Bed Height 13
  - Outboard Tape Roll Mounting 13
  - Tape Leg Length 13
  - Bumper Supports 14
  - Box Size Capacity of Case Sealer 14
  - Electrical Connection and Controls 14
  - Initial Start-Up of Case Sealer 14

Operation ..... 15 - 21
- Operating "Warnings" 19
- Machine Switches and Controls ..... 16 - 18
- Tape Loading/Threading 19
- Theory of Operation ..... 20 - 21
- Box Sealing 21

(Table of Contents continued on next page)

Table of Contents (Continued)

Page

Maintenance ..... 22 - 24
- Cleaning 22
- Lubrication 22
- Box Drive Belt Replacement 23
- Circuit Breaker 24
- Knife Replacement, Taping Head 24

Adjustments ..... 25 - 27
- Box Drive Belt Tension ..... 25 - 27
- Taping Head Adjustments 27

Special Set-Up Procedure ..... 29 - 32
- Changing Tape Leg Length ..... 29 - 30
- Box and Machine Bed Height Range 31
- Box Height Range 32

Troubleshooting ..... 33 - 34

Electrical Diagram 35

Pneumatic Diagram 36

Replacement Parts and Service Information 37
- Spare Parts 37
- Label Kit 37
- Tool Kit 37

Options/Accessories 38

Replacement Parts Illustrations and Parts Lists ..... (Yellow Section) 39 - 67

Section II – AccuGlide™ II STD 2 Inch Taping Heads

(See Section II for Table of Contents)

Description

The **3M-Matic™ 700r Random Case Sealer** with **AccuGlide™ II** Taping Heads is designed to apply a “C” clip of **Scotch™** brand pressure-sensitive film box sealing tape to the top and bottom center seam of regular slotted containers. The 700r automatically adjusts to a wide range of box sizes (see "Specifications – Box Weight and Size Capacities", Page 8).

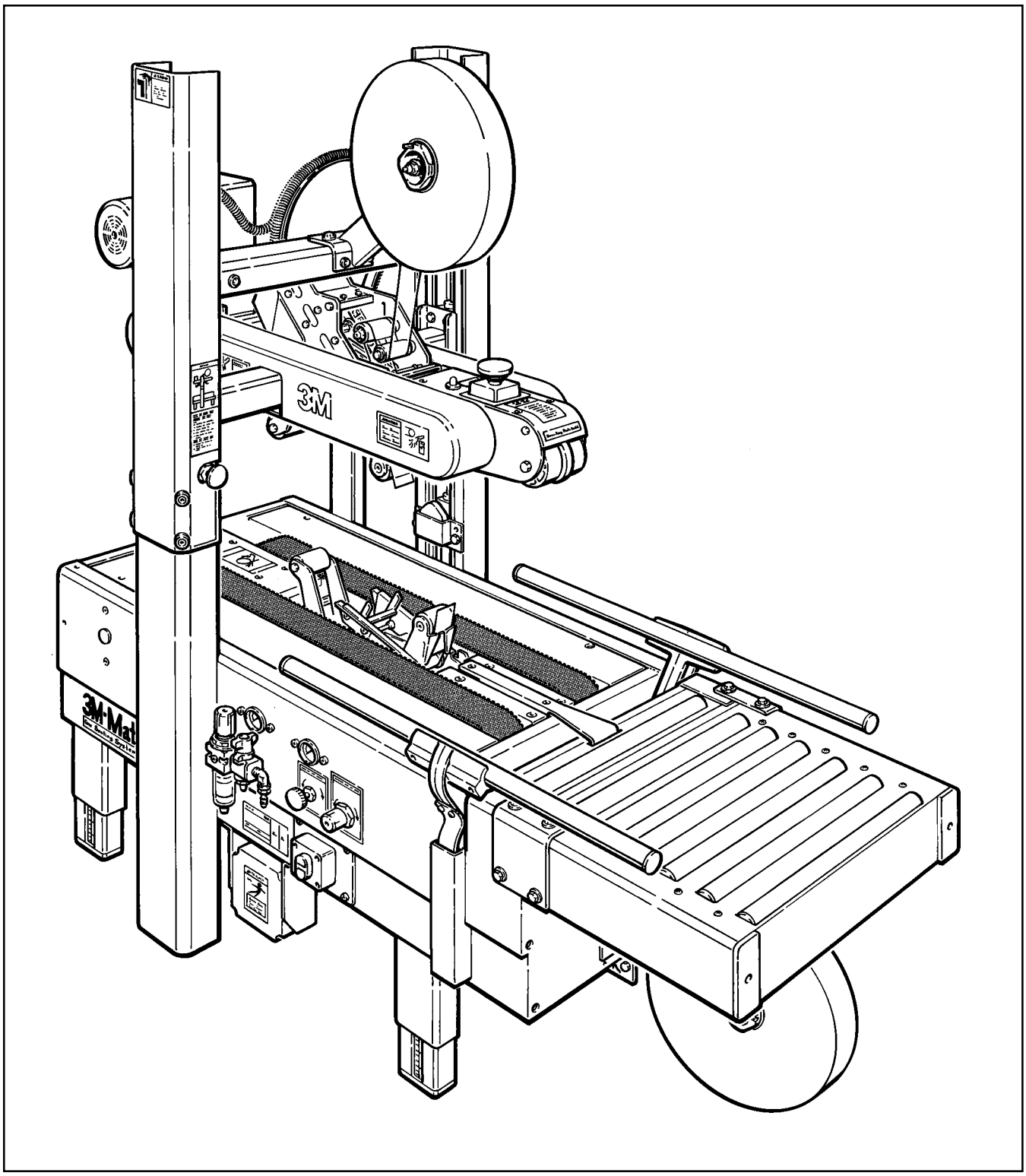

3M-Matic™ 700r Random Case Sealer, Type 39600 (Note – Lower tape supply roll and bracket assembly are shown in the alternate location)

Equipment Warranty and Limited Remedy: THE FOLLOWING WARRANTY IS MADE IN LIEU OF ALL OTHER WARRANTIES, EXPRESS OR IMPLIED, INCLUDING, BUT NOT LIMITED TO, THE IMPLIED WARRANTY OF MERCHANTABILITY, THE IMPLIED WARRANTY OF FITNESS FOR A PARTICULAR PURPOSE AND ANY IMPLIED WARRANTY ARISING OUT OF A COURSE OF DEALING, A CUSTOM OR USAGE OF TRADE:

3M sells its **3M-Matic™ 700r, Type 39600** with the following warranties:

1. The drive belts and the taping head knives, springs and rollers will be free from all defects for ninety (90) days after delivery.
2. All other taping head parts will be free from all defects for three (3) years after delivery.
3. All other parts will be free from all defects for two (2) years after delivery.

If any part is proved to be defective within its warranty period, then the exclusive remedy and 3M's and seller's sole obligation shall be, at 3M's option, to repair or replace the part, provided the defective part is returned immediately to 3M's factory or an authorized service station designated by 3M. A part will be presumed to have become defective after its warranty period unless the part is received or 3M is notified of the problem no later than five (5) calendar days after the warranty period. If 3M is unable to repair or replace the part within a reasonable time, then 3M at its option, will replace the equipment or refund the purchase price. 3M shall have no obligation to provide or pay for the labor required to install the repaired or replacement part. 3M shall have no obligation to repair or replace (1) those parts failing due to operator misuse, carelessness, or due to any accidental cause other than equipment failure, or (2) parts failing due to non-lubrication, inadequate cleaning, improper operating environment, improper utilities or operator error.

Limitation of Liability: 3M and seller shall not be liable for direct, indirect, special, incidental or consequential damages based upon breach of warranty, breach of contract, negligence, strict liability or any other legal theory.

The foregoing Equipment Warranty and Limited Remedy and Limitation of Liability may be changed only by a written agreement signed by authorized officers of 3M and seller.

Contents – 700r Random Case Sealer

(1) 700r Random Case Sealer, Type 39600
(1) Upper Tape Drum/Bracket/Hardware
(2) Column Bumper Bracket/Hardware
(1) Tool/Spare Parts Kit
(1) Instruction and Parts Manual

Scotch™, **AccuGlide™**, and **3M-Matic™** are Trademarks of 3M, St. Paul, Minnesota 55144-1000

This safety alert symbol identifies important messages in this manual. READ AND UNDERSTAND THEM BEFORE INSTALLING OR OPERATING THIS EQUIPMENT.

Important – In the event the following safety labels are damaged or destroyed, **they must be replaced to ensure operator safety**. A label kit, part number 78-8098-9177-9 is available as a stock item or individual labels can be ordered. See Parts Illustration/List, Section I, pages 66 and 67.

The **"Warning – Sharp Knife"** label **(A)**, shown in **Figure 1-1**, is attached to both sides of the upper frame at the location of the cut-off knife on the upper taping head. The **"Warning – Sharp Knife"** label **(B)** shown in **Figure 1-1**, is attached to the orange cut-off knife guard on both taping heads. The labels warn operators and service personnel of the very sharp knife used to cut the tape at the end of the tape application.

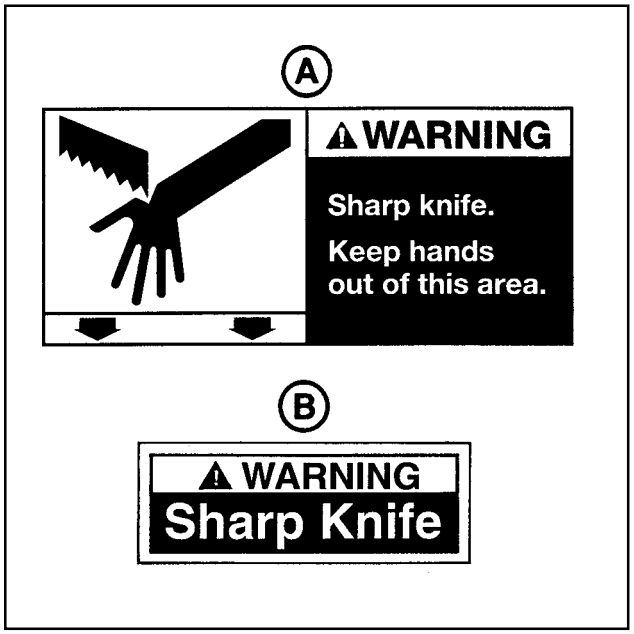

Figure 1-1 – Knife Warning Label

The **"Warning – Hazardous Voltage"** label, shown in **Figure 1-2**, is attached to the cover of the electrical control box. The label warns service personnel to unplug the power supply before attempting any service work on the case sealer.

Figure 1-2 – Electrical Warning Label

The **"Warning – Moving Belts"** labels, shown in **Figure 1-3**, are attached to both sides of the upper belt guards at the infeed end of the machine. The labels warn operators to keep hands or loose clothing away from this area because of moving belts.

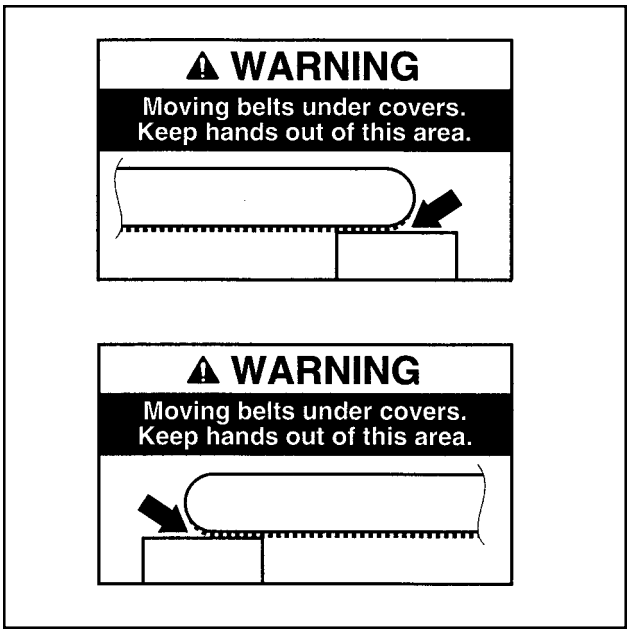

Figure 1-3 – Box Drive Belt Warning Label

Important Safeguards (Continued)

The **"Caution – Pinch Point"** label, shown in **Figure 1-4**, is attached to the center plate at the exit end of the machine bed. The label warns the operator to keep hands out of this area when the drive belts are running.

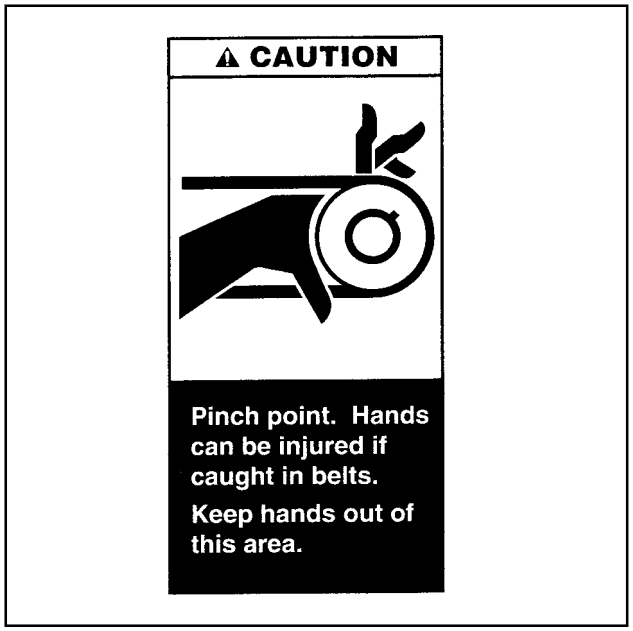

Figure 1-4 – Pinch Point Caution Label

The **"Caution – Pinch Point"** label, shown in **Figure 1-5**, is attached to the upper end of both column guards. It warns the operator to keep hands away from this area when machine is operating.

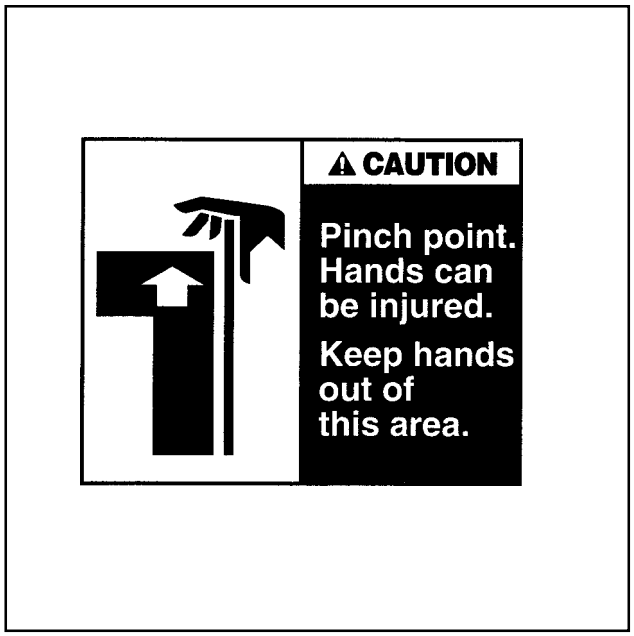

Figure 1-5 – Hands Caution Label

A red emergency stop switch is located on the top/front of the upper drive assembly. The **"Stop"** label shown in **Figure 1-6**, is located near the switch and reminds operators and casual personnel of the function of this switch. In addition, an **"On/Off"** label is attached next to the electrical On/Off switch on the side of the machine frame.

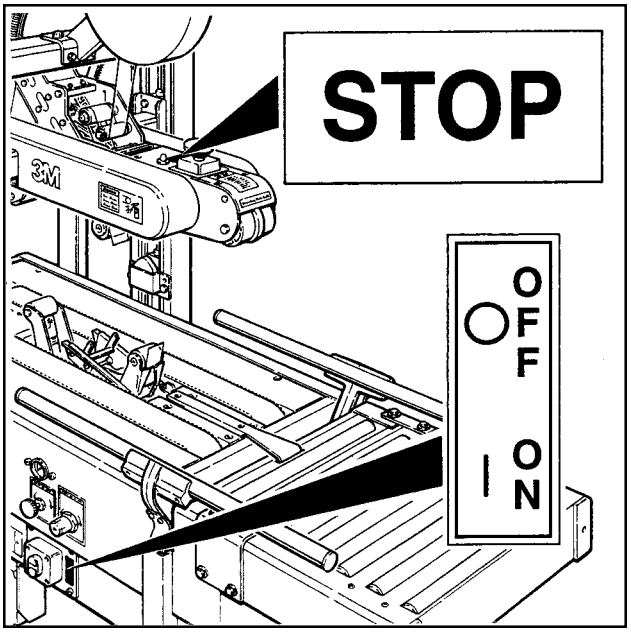

Figure 1-6 – Stop and On/Off Labels

The **"Safety Instructions"** label, shown in **Figure 1-7,** is attached to the top/front of the upper drive assembly. The label provides convenient safeguard instructions for the operator and service personnel.

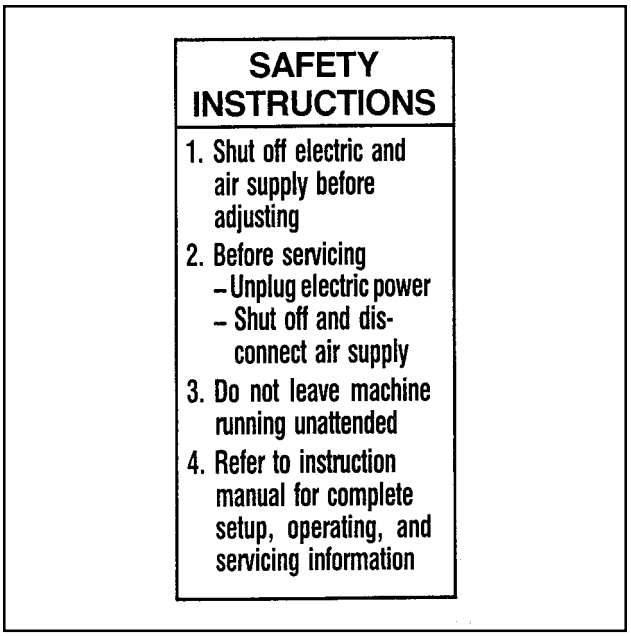

Figure 1-7 – Safety Instructions Label

The **"Safety Instructions"** and **"Air Pressure"** labels, shown in **Figure 1-8**, reminds operator or service personnel of the recommended air pressure required and location of On/Off air valve.

Figure 1-8 – Air Pressure Label

The **"Notice – Taping Head Latch"** label, shown in **Figure 1-9**, is attached to the top surface of the upper, left belt guard at the front edge of the taping head. The label reminds operators and service personnel to keep latch down except to remove taping head.

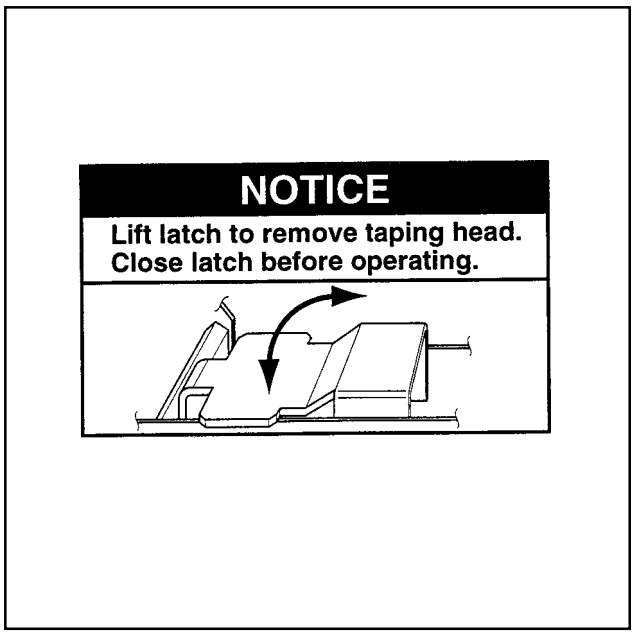

Figure 1-9 – Upper Taping Latch Label

The **"Notice – Raise and Lower Upper Drive Assembly"** label, shown in **Figure 1-10** is attached to the left column guard at the location of the mechanical latch. The label provides instructions on raising, latching/unlatching and lowering the upper drive assembly.

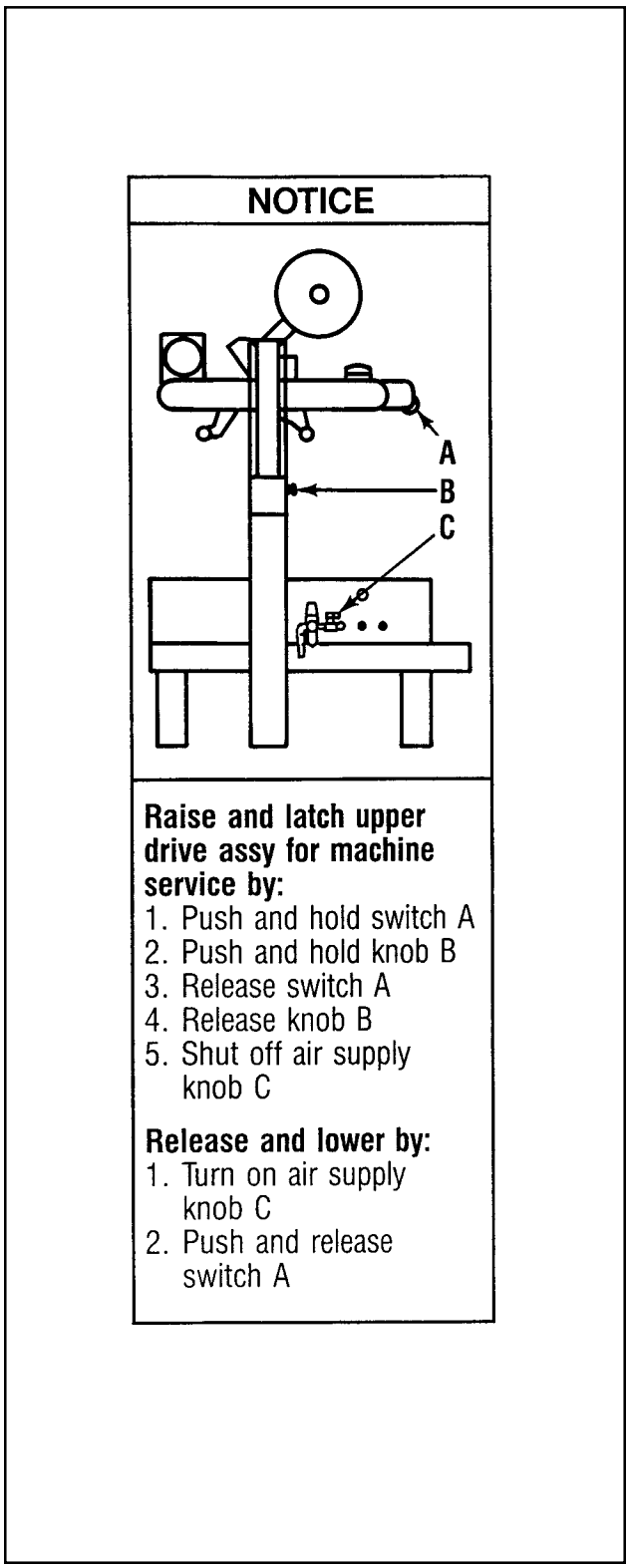

Figure 1-10 – Upper Taping Latch Label

Important Safeguards (Continued)

The **"Centering Guide Force Adjust"** label, shown in **Figure 1-11**, is attached to the left side of the machine frame over the centering guide control knob. The label provides increase/decrease force information to the operator.

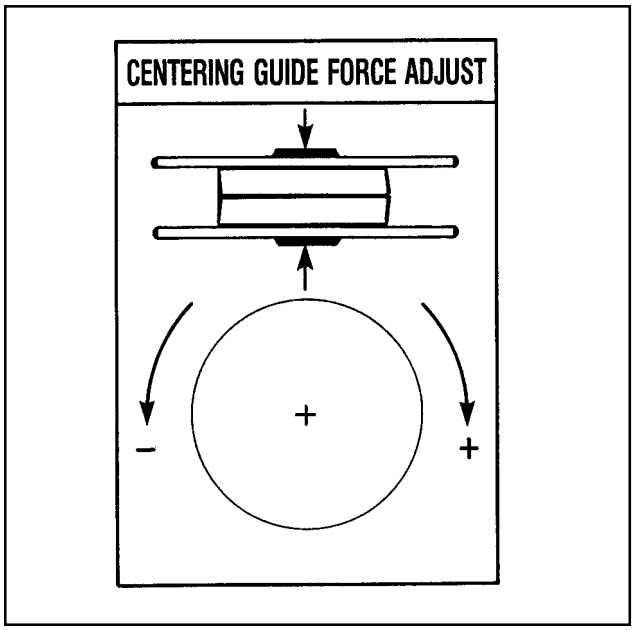

Figure 1-11 – Centering Guide Force Adjust Label

The **"Top Drive Assembly Force Adjust"** label, shown in **Figure 1-12**, is attached to the left side of the machine frame over the top drive assembly control knob. This label provides increase/decrease force information to the operator.

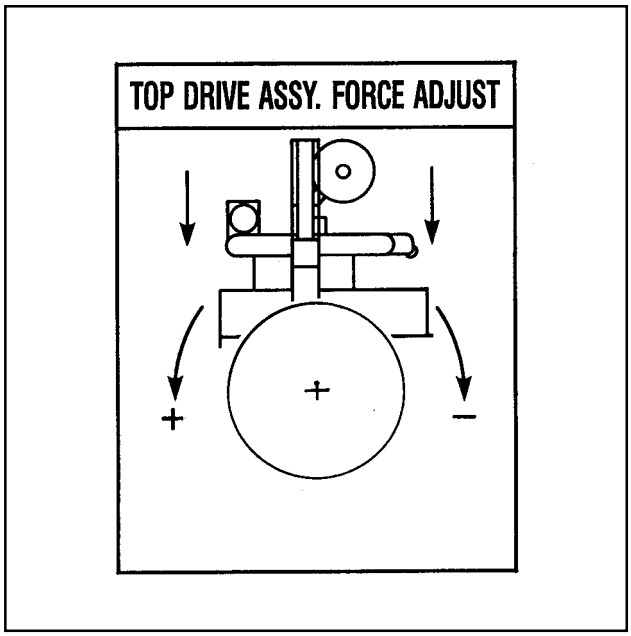

Figure 1-12 – Top Drive Assembly Force Adjust Label

The **"Box Centering Switch"** label **(A)**, shown in **Figure 1-13**, is attached to the center plate on the machine bed at the infeed end. The label identifies the box centering switch.
The **"Drive Assembly Raising Switch"** label **(B)**, shown in **Figure 1-13**, is located above the switch at the top/front of the upper drive assembly. The label identifies the drive assembly raising switch.

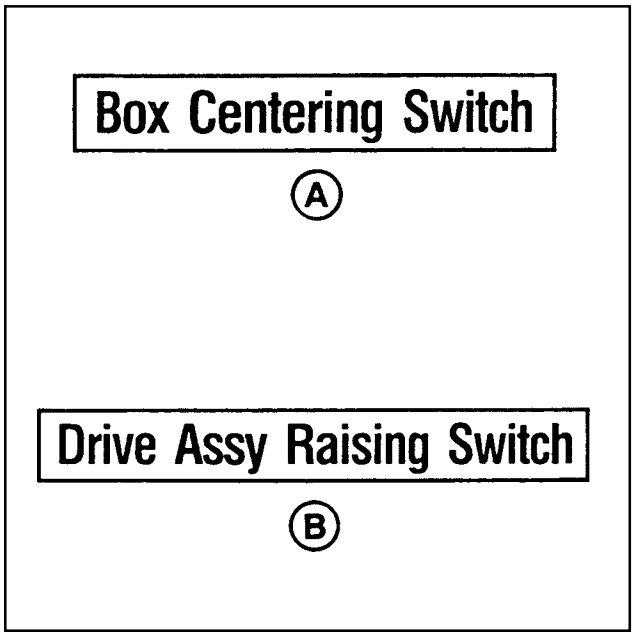

Figure 1-13 – Box Centering Switch and Drive Assembly Raising Switch Labels

The **"Tape Threading"** label, shown in **Figure 1-14,** is attached to the left side of both the upper and lower taping heads. This label provides a convenient tape threading diagram. More detailed tape loading and threading information is provided in the operation section of this manual.

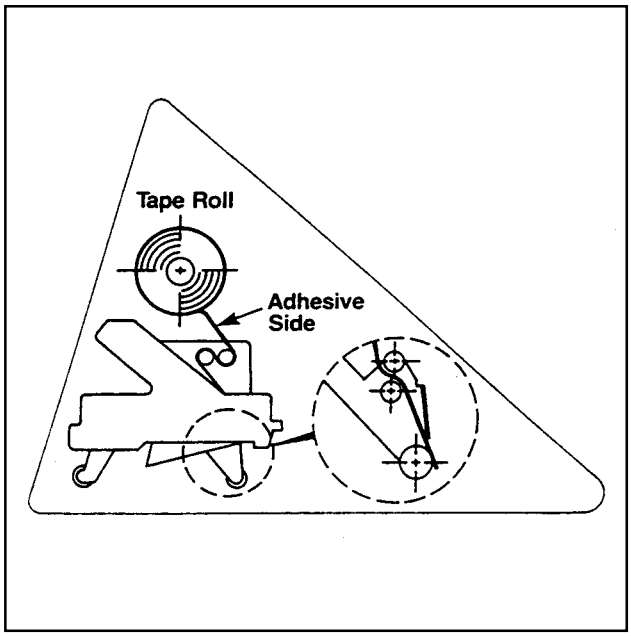

Figure 1-14 – Tape Threading Label

Specifications

1. **Power Requirements:**

   Electrical – 115 VAC, 60 Hz, 3.8 A (440 watts)
   Pneumatic – 5 bar gauge pressure [70 PSIG]
   110 litre/min @ 21° C, 1.01 bar [3.75 SCFM] at 15 boxes per minute
   A pressure regulator is included

   The machine is equipped with two 1/6 HP gearmotors and comes with an 2.4 m [eight foot] standard neoprene covered power cord and a grounded plug. Contact your 3M Representative for power requirements not listed above.

2. **Operating Rate:**

   Up to 15 boxes per minute. Actual production rate is dependent on box size, box size mix, and operator dexterity.

   Box drive belt speed approximately 0.4 m/s [78 FPM]

3. **Operating Conditions:**

   Use in dry, relatively clean environments at 4° to 50° C [40° to 120° F] with clean, dry, boxes.

> **Note** – Machine should not be washed down or subjected to conditions causing moisture condensation on components.

4. **Tape:**

   Scotch™ brand pressure-sensitive film box sealing tapes.

5. **Tape Width:**

   36 mm or 1 1/2 inch minimum to 50 mm [2 inch] maximum

6. **Tape Roll Diameter:**

   Up to 405 mm [16 inch] maximum on a 76.2 mm [3 inch] diameter core.
   (Accommodates all system roll lengths of **Scotch™** brand film tapes.)

7. **Tape Application Leg Length – Standard:**

   70 mm ± 6 mm [2 3/4 inch ±1/4 inch]

   Tape Application Leg Length – Optional:
   (See "Special Set-Up Procedure", page 29)
   50 mm ± 6 mm [2 inch ±1/4 inch]

(Specifications continued on next page)

Specifications (Continued)

8. **Box Board:**

   Style – regular slotted containers – RSC
   125 to 275 P.S.I. bursting test, single wall or double wall B or C flute.

9. **Box Weight and Size Capacities:**

   A. Box Weight, up to 38.6 kg [85 lbs.] **maximum** – contents must support flaps.

   B.

Box Size:	**Minimum**	**Maximum**
Length –	150 mm [6.0 inch]	Unlimited
Width –	150 mm [6.0 inch]*	550 mm [21.5 inch]
Height –	120 mm [4.75 inch]** ***	620 mm [24.5 inch] ***

***** Cartons narrower than 250 mm [10 inch] in width may require more frequent belt replacement because of limited contact area.

****** 95 mm [3.75 inch] height with heads adjusted to apply 50 mm [2 inch] tape leg lengths. (See "Special Set-Up Procedure", page 29.)

******* 200 mm [8.0 inch] minimum to 725 mm [28.5 inch] maximum height with columns adjusted to upper position. (See "Special Set-Up Procedure", page 31.)

Special modifications may be available for carton sizes not listed above.
Contact your 3M Representative for information.

Note: The case sealer can accommodate most boxes within the size range listed above. However, if the box length (in direction of seal) to box height ratio is .5 or less, then several boxes should be test run to assure the proper machine performance.

DETERMINE THE BOX LIMITATIONS BY COMPLETING THIS FORMULA:

$$\frac{\textbf{BOX LENGTH IN DIRECTION OF SEAL}}{\textbf{BOX HEIGHT}} \quad \textbf{SHOULD BE GREATER THAN .5}$$

Any box ratio approaching this limitation should be test run to assure performance.

(Specifications continued on next page.)

Specifications (Continued)

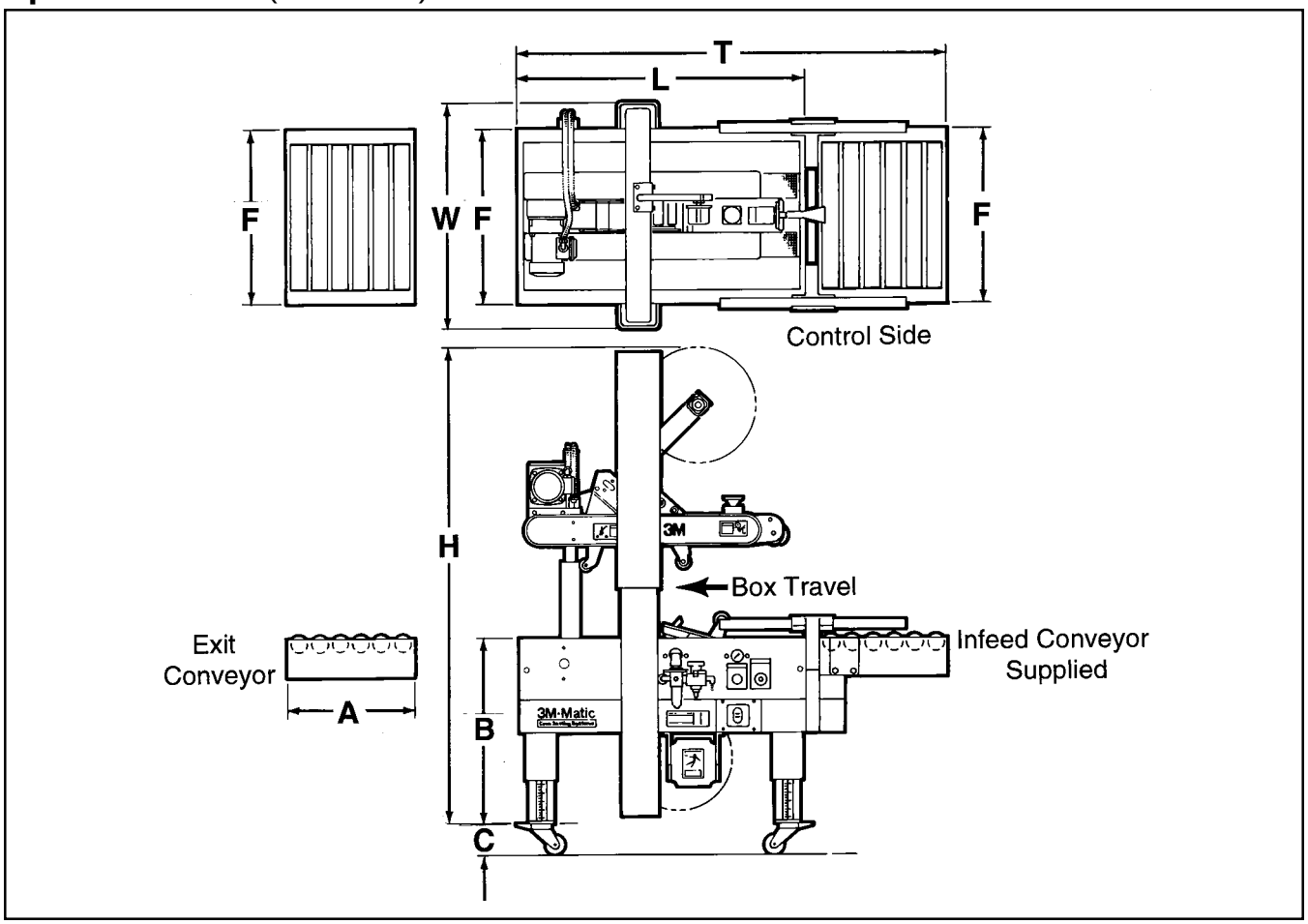

10. Machine Dimensions:

	W	L	H	A*	B	C**	F	T
Minimum								
mm	790	1180	1575	460	610***	120	625	1640
[Inches]	[31]	[40 .5]	[62]	[18]	[24]	[4.75]	[24.5]	[64.5]
Maximum								
mm			2185***		890			
[Inches]	- -	- -	[86]	- -	[35]	- -	- -	- -

* Exit conveyor is optional
** Casters are optional
*** When columns are adjusted to upper position, "B" minimum dimension is 570 mm [22.5 inch] and "H" maximum dimension is 2285 mm [90 inch]. (See "Special Set-Up Procedure – Box and Machine Bed Height Range", Page 31.)

Weight – 225 kg [500 lbs] crated (approximate)
200 kg [430 lbs] uncrated (approximate)

11. **Set-Up Recommendations:**

- Machine must be level.
- Customer supplied infeed and exit conveyors (if used) should provide straight and level box entry and exit.
- Exit conveyors (powered or gravity) must convey sealed boxes away from machine.

Installation and Set-Up

Receiving And Handling

After the machine has been uncrated, examine the case sealer for damage that might have occurred during transit. **If damage is evident, file a damage claim immediately** with the transportation company and also notify your 3M Representative.

Machine Set-Up

> **Important – Read "Warnings", on page 19, before attempting to set-up the case sealer for operation.**

The following instructions are presented in **the order recommended** for setting up and installing the case sealer, as well as **for learning the operating functions and adjustments**. Following them step by step will result in your thorough understanding of the machine and an installation in your production line that best utilizes the many features built into the case sealer. Refer to Figure 3-1, page 15, to identify the various components of the case sealer.

> **Note** – A tool kit consisting of metric open end and hex socket wrenches is provided with the machine. These tools should be adequate to set-up the machine, however, other tools supplied by the customer will be required for machine maintenance.

PACKAGING AND SEPARATE PARTS

1. Lift off fiberboard cover from pallet after removing staples and straps at bottom.

2. Remove protective wrapping around machine.

3. Install the upper tape drum bracket on the top crossbar as shown in Figure 2-1A.

4. The column guards, shown in Figure 2-1 have been installed upside down for shipping. They must be repositioned for safe operation of the machine. Remove and retain the screws and washers holding the guards on the columns. Rotate the guards 180° and install back on the columns as shown. Replace existing screws and washers to secure the guards in place.

5. Cut cable ties securing upper assembly to machine bed on each side.

6. Pneumatic connection.

> **WARNING – Use care when working with compressed air.**

The case sealer requires a 5 bar gauge pressure 110 litre/min [70 PSIG], @21°C, 1.01 bar [3.75 SCFM] compressed air supply. As shown in Figure 3-1, an on/off valve, pressure regulator, and filter are provided to service the air supply.

> **Note –** A precision regulator is used to balance the top drive assembly. Due to the self relieving feature of this regulator a small amount of air will continually vent to the atmosphere. This is normal and amounts to approximately 3 litre/min. [0.1 SCFM].

a. Read and remove safety tag from pneumatic "On/Off" valve.

b. Connect the main air supply line to the inlet side of the on/off valve using the barbed fitting and hose clamp provided. See Figure 2-1B. The customer supplied air hose (8 mm [5/16 inch] ID) must be clamped tightly to the barbed fitting.

   If another type of connector is desired, the barbed fitting can be removed and replaced with the desired 1/4-18 NPT threaded connector.

   Always turn the air valve **"Off"** when the air supply line is being connected or disconnected.

7. Turn the air supply on be turning the air on/off valve to SUP (On).

> **Note –** The air valve has provisions for lock out/tag out according to plant regulations.

8. Raise and latch upper drive assembly in full "Up" position.

> **CAUTION – Read "Operation – Mechanical Latch", page 18, before raising and latching upper drive assembly.**

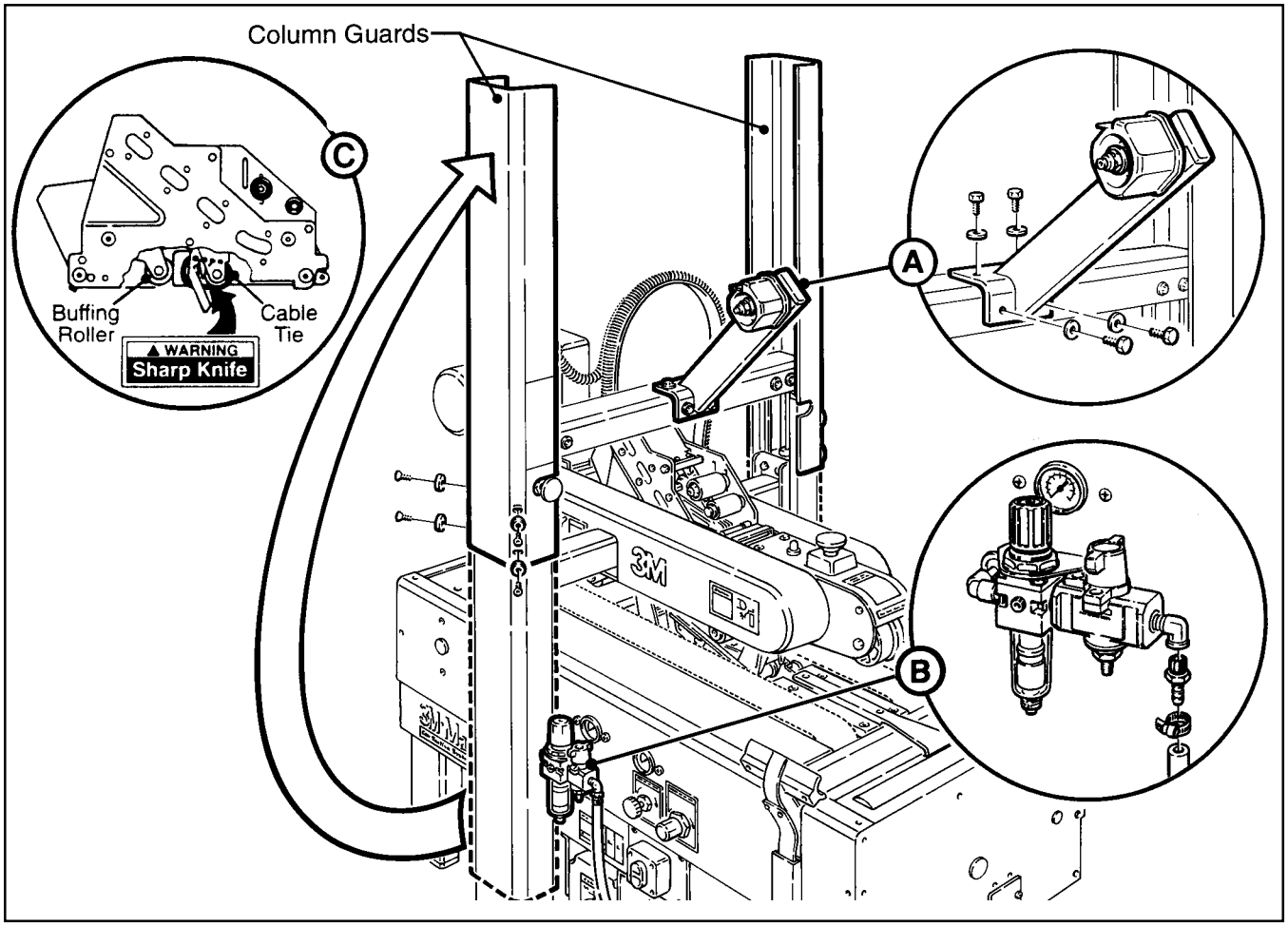

Figure 2-1 – 700r Frame Set-Up

9. Cut and remove cable ties on both upper and lower taping heads. (Applying/buffing rollers are held retracted for shipment.)

> **CAUTION – Follow this step carefully as spring pressure is applied to applying and buffing arms when cable tie is removed. Keep hands/fingers AWAY from tape cut-off knife under orange knife guard. Knife is extremely sharp and can cause severe injury.**

Hold taping head BUFFING ROLLER and cut and remove cable tie that holds applying/buffing arms retracted. See Figure 2-1C. Allow buffing/applying arms to extend slowly.

Also cut and remove cable tie at rear of lower taping head.

10. Check for free action of both upper and lower taping heads.

> **WARNING – Keep hands/fingers away from tape cut-off knife under orange knife guard. Knife is extremely sharp and can cause severe injury.**

Push buffing roller into head to check for free, smooth action of taping heads.

11. Ensure that the tape drum bracket assembly, located on the lower taping head, is mounted straight down, as shown in Figure 2-5A. The tape drum bracket assembly can be pivoted to provide tape roll clearance in certain cases.

12. Remove fasteners that secure case sealer legs to pallet.

13. Use appropriate material handling equipment to remove the machine from the pallet and move it into position.

    Whenever the machine is lifted with a fork truck, insure that the forks span completely across the machine frame and do not contact any wiring or mechanism under the machine frame. In some cases the lower taping head may need to be removed to avoid damage.

> ⚠ **CAUTION – Machine weighs approximately 200 kg [430 pounds] uncrated.**

14. Continue with the remainder of the Installation and Set-Up procedure through page 14.

INFEED CONVEYOR ASSEMBLY

1. Remove the conveyor and the package of parts from the carton.

2. Verify that the package contains two right angled cover plates, twelve M8 x 15 hex head screws, and eight M8 flat washers.

3. To assemble the infeed conveyor, refer to Figure 2-2 and locate four bolt holes on the infeed end of the case sealer frame.

4. Insert a M8 x 15 screw in each hole so that only a few threads take hold. Do not use washers with these screws.

5. Attach the infeed conveyor over the screws using the inverted keyholes in the end of the conveyor. Tighten all four screws with a 13 mm wrench.

6. Refer to Figure 2-3. Set the cover plates over the joint between the conveyor and the frame on each side and secure them with four M8 x 15 screws and M8 washers.

CENTERING GUIDES

1. Remove the two centering guides and four M6 x 20 socket head screws from the package.

2. Using a 5 mm hex key wrench, attach the centering guides to the rails with four M6 x 20 screws (two in each guide) as shown in Figure 2-4.

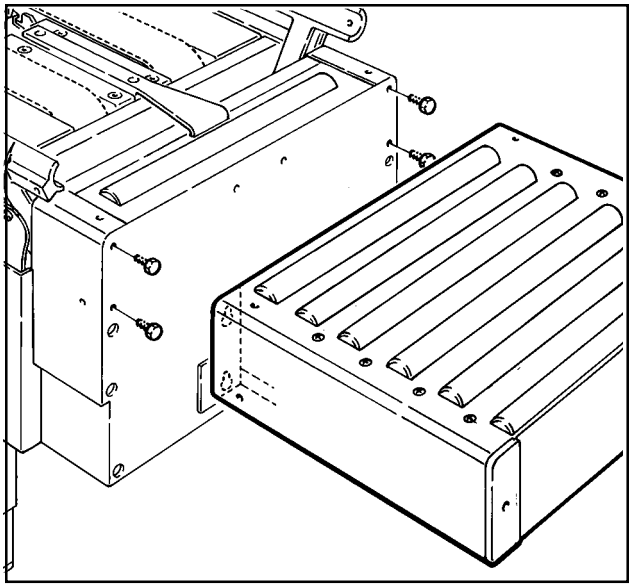

Figure 2-2 – Infeed Conveyor

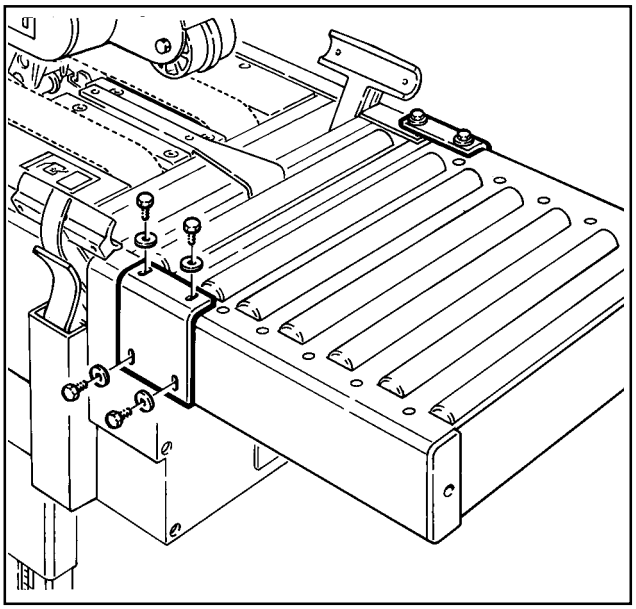

Figure 2-3 – Cover Plates

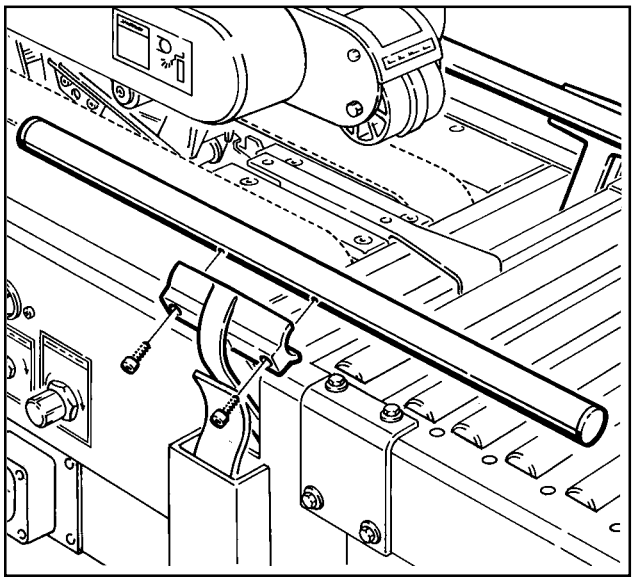

Figure 2-4 – Centering Guides

MACHINE BED HEIGHT

Adjust machine bed height. The case sealer is equipped with four adjustable legs that are located at the corners of the machine frame. The legs can be adjusted to obtain different machine bed heights from 610 mm [24 inch] minimum to 890 mm [35 inch] maximum.

Note – Minimum machine bed height can be reduced to 570 mm [22.5 inch] by moving outer columns up one set of mounting holes. However, this change also increases minimum box height of 120 mm [4.8 inch] to 170 mm [6.8 inch]. (See "Special Set-Up Procedure – Box/Machine Bed Height Range", page 31.)

Refer to Figure 2-5C and set the machine bed height as follows:

1. Use appropriate material handling equipment and blocking techniques to raise the machine frame to allow adequate leg adjustment.

CAUTION – Machine weighs approximately 200 kg [430 pounds] uncrated.

2. Loosen, but do not remove, two M8 x 1.25 socket head screws in one leg (use M6 hex wrench). Adjust the leg length for the desired machine bed height. Retighten the two screws to secure the leg. Adjust all four legs equally.

OUTBOARD TAPE ROLL MOUNTING
(Lower Taping Head)

Remove the tape drum bracket assembly, spacer and fasteners from the lower taping head. Install and secure on the infeed end of the lower frame, as shown in Figure 2-5B.

TAPE LEG LENGTH

Taping heads are pre-set to apply 70 mm [2.75 inch] long tape legs. To change tape leg length to 50 mm [2.0 inch], see "Special Set-Up Procedure – Changing the Tape Leg Length", page 29.

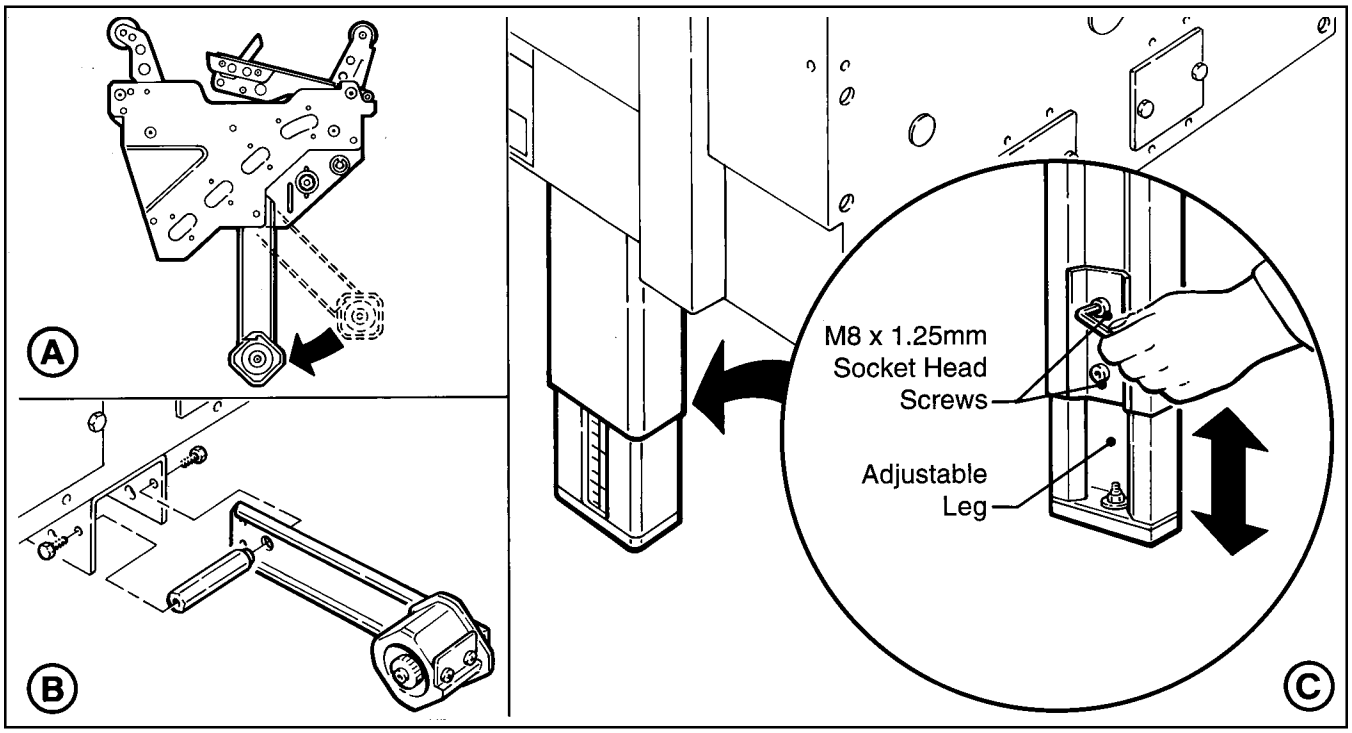

Figure 2-5 – Machine Bed Height Adjustment and Lower Tape Drum Bracket Position

BUMPER SUPPORTS (Upper Drive Assembly)

Raise and lock the upper drive assembly into its raised position. See "Operation – Mechanical Latch", page 18.

Install the two bumper supports, one on each side column using lower holes in bracket as shown in Figure 2-6. (The upper set of holes allows the upper drive assembly to return to a lower position. However, this minimum position can only be used if the taping heads are adjusted to apply 50 mm [2 inch] long tape legs.)

Note – Interference and damage to the taping heads may occur if the upper mounting bracket holes are used with the taping heads at the standard setting (70 mm [2.75 inch] tape legs).

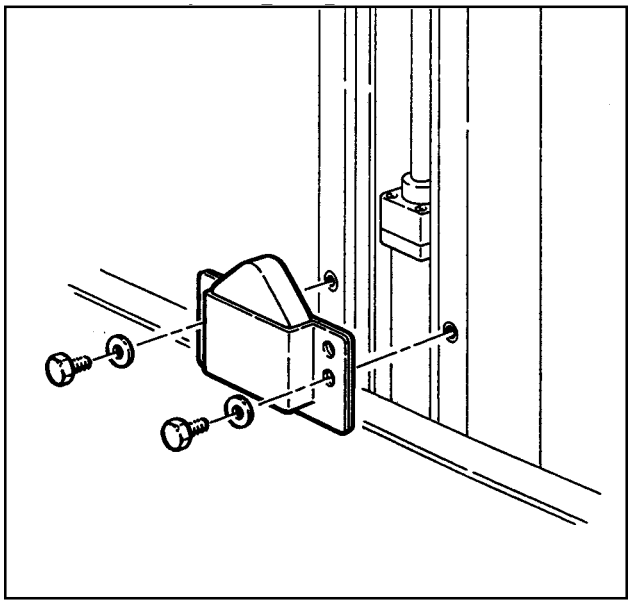

Figure 2-6 – Bumper Supports

BOX SIZE CAPACITY OF CASE SEALER

At its factory setting, the case sealer handles box sizes up to 620 mm [24.5 inch] maximum height. If larger capacity is needed, the machine can be adjusted to accommodate boxes up to 725 mm [28.5 inch] high. Refer to "Special Set-Up Procedure – Box and Machine Bed Height Range", page 31. **Note – Adjusting machine to accommodate 725 mm [28.5 inch] high boxes also increases minimum box size to 170 mm [6.8 inch].**

ELECTRICAL CONNECTION AND CONTROLS

The electrical control box and "On/Off" switch are located on the lower left side of the machine frame. See Figure 3-1. If desired, for operator convenience, the "On/Off" switch can be relocated to the right side of the machine frame. A standard three conductor power cord with plug is provided at the back of the electrical control box for 115 Volt, 60 Hz., 3.8 Amp electrical service. The receptacle providing this service shall be properly grounded. Before the power cord is plugged into 115 Volt, 60 Hz outlet make sure that all packaging materials and tools are removed from the machine. **Do not plug electrical cord into outlet until ready to run machine.**

Use of an extension cord is not recommended. However, if one is needed for temporary use, it must have a wire size of 1.5 mm diameter [AWG 16], have a maximum length of 30.5 m [100 ft], and must be properly grounded.

WARNING – To prevent shock and fire hazard: Position extension cord where it will be out of the way of foot or vehicle traffic. Extension cord is only for temporary use – do not use for a permanent installation.

Note – Machines outside the U.S. may be equipped with 220/240 Volt, 50 Hz systems or other electrical requirements compatible with local practice.

INITIAL START-UP OF CASE SEALER

After completing the "Installation and Set-Up" procedure, continue through "Operation" for tape loading and start-up to be sure case sealer is properly adjusted to run boxes

IMPORTANT – Before operating the case sealer, read the "Important Safeguards", pages 3-6 and "Warnings" on page 19 as well as all of the "Operation" instructions.

Refer to Figure 3-1 and 3-2 below to acquaint yourself with the various components and controls of the case sealer. Also see Figures 3-1 and 3-2 in Section II for taping head components.

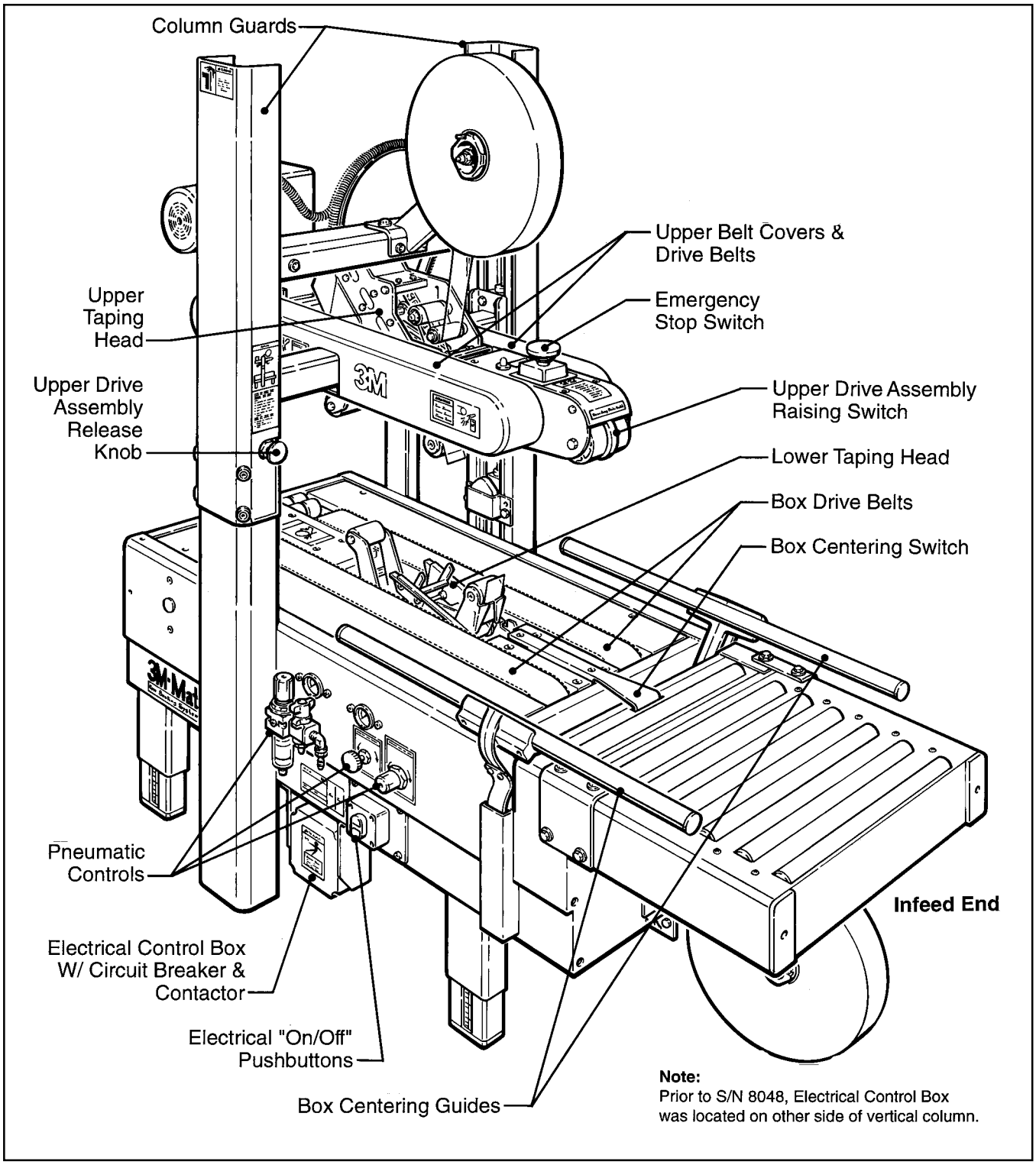

Figure 3-1 – 700r Case Sealer Components (Left Front View)

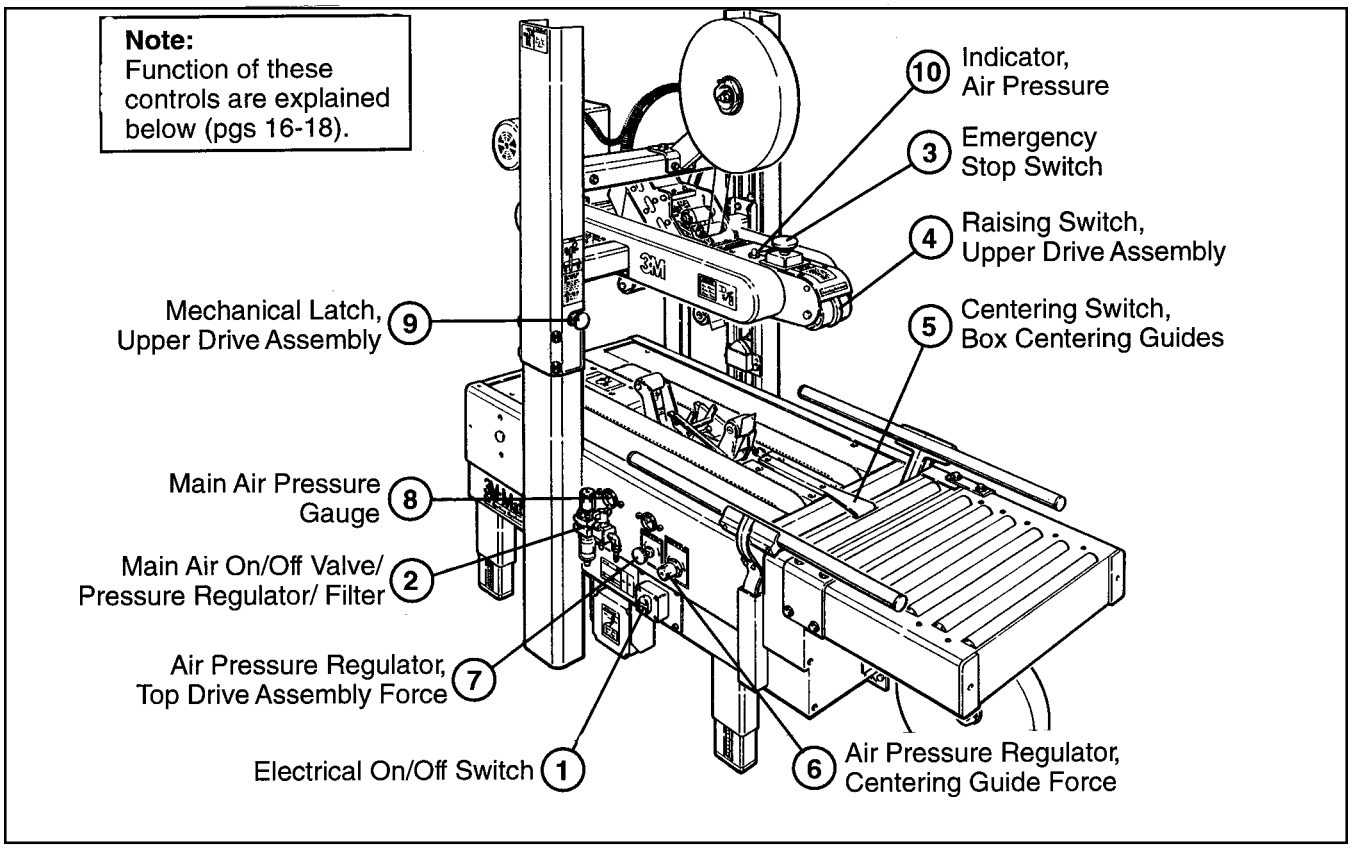

Figure 3-2 – Controls, Valves and Switches

(1) **Electrical "On/Off" Switch**
The box drive belts are turned on and off ("Off" button is red) with the electrical switch on the side of the machine frame.

> **Note –** The case sealer has a circuit breaker located in the electrical enclosure on the lower left side of the machine frame. If circuit becomes overloaded and circuit breaker trips, **unplug the machine electrical cord** and determine cause of overload. After two minutes, remove the electrical control box cover and reset the circuit breaker by pressing the "Reset" button and then the "Start" button on the circuit breaker. Replace the control box cover, plug machine electrical cord into outlet and restart machine by pressing green "On" button.

(2) **Main Air "On/Off" Valve/Pressure Regulator/ Filter –** Figure 3-3
This set of pneumatic components controls, regulates and filters plant air supply to the two separate control circuits of the case sealer.

"On/Off" Valve – "On" turn to "SUP" – "Off" turn to "EXH". **Note – Turning air supply "Off" automatically bleeds air pressure from the case sealer air circuits.**

Always turn the air "Off" when machine is not in use, when servicing the machine, or when connecting or disconnecting air supply line.

> **Note** – The air valve has provisions for lockout/tagout according to plant regulations.

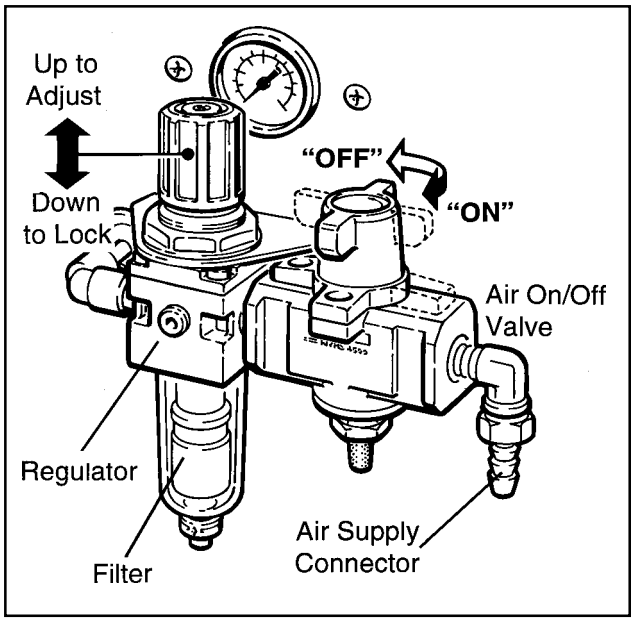

Figure 3-3 – "On/Off" Valve/Regulator/Filter

Pressure Regulator regulates main air pressure to the machine to adjust pressure, pull knob up and turn – push down to lock setting.

Filter removes dirt and moisture from plant air before it enters the case sealer pneumatic circuits. If water collects in bottom of bowl, lift up on the valve on the bottom of bowl to drain.

3 **Emergency Stop Switch**
The machine electrical supply can be turned off by pressing the latching emergency stop switch. To restart machine, rotate emergency stop switch (releases switch latch) and then restart machine by pressing green (On) button on side of machine frame.

4 **Raising Switch, Upper Drive Assembly**
This switch, when touched by the leading edge of a box , pneumatically raises the upper frame to allow insertion of the box under the drive belts. As the box moves under the switch, releasing it, the upper drive assembly descends on the box and the drive belts convey the box through the machine. When switch is actuated by hand, the upper drive assembly rises to its maximum height. Released, the upper drive assembly descends to its rest position.

5 **Centering Switch, Box Centering Guide**
This pneumatic switch controls the box centering guides. When switch is activated by a box entering the case sealer, the centering guides close (centering the box), and released (after box passes over switch), the guides open.

6 **Air Pressure Regulator, Centering Guide Force Adjustment –** Figure 3-4
This regulator is used to adjust centering guides according to weight of boxes. Pressure should be adequate to center boxes, but low enough to allow easy pushing of boxes under taping head. The regulator setting can be locked by tightening the phillips screw as shown.

7 **Air Pressure Regulator/Gauge, Top Drive Assembly Force Adjustment –** Figure 3-5
Set nominally to control "down" movement of top drive assembly and the pressure exerted against the box. The regulator setting is changed as necessary for the boxes being sealed to provide adequate drive belt pressure against the box to positively convey the boxes through the machine. If the boxes stop or hesitate while being conveyed, decrease the regulator pressure which will increase the drive belt force on the box for more friction between the box and drive belts. Adjust setting as necessary to get continuous movement of boxes through machine.

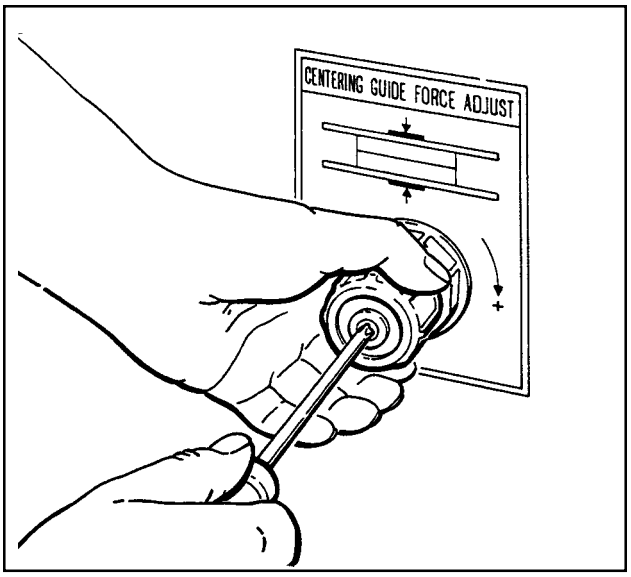

Figure 3-4– Air Regulator, Centering Guides

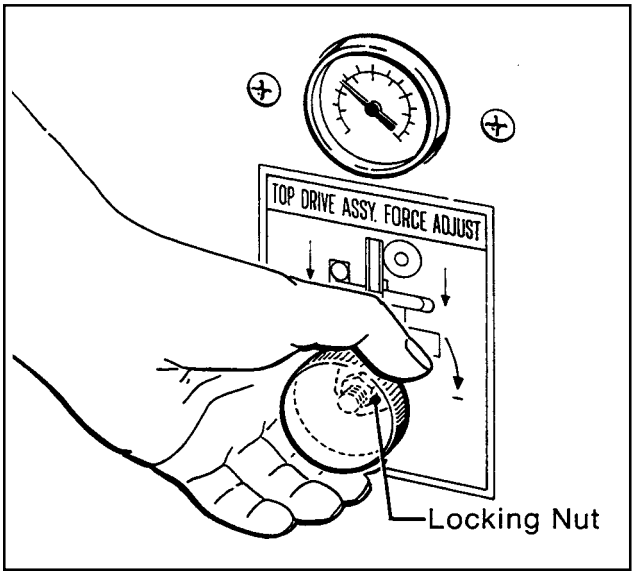

Figure 3-5 – Air Regulator/Gauge, Top Drive Assembly

For boxes which are fully packed with products that support the top flaps, the adjustment of this regulator is not critical since the boxes can support the pressure of the upper frame (drive belts) at a wide range of regulator settings. However, if under-filled or fragile boxes are sealed, this regulator can be used to set the upper frame pressure to a minimum that is still adequate to positively convey the box and to prevent damage of boxes, The regulator setting can be locked by securing the lock nut on the regulator shaft as shown in Figure 3-5.

> **Note –** A precision regulator is used to balance the top drive assembly. Due to the self relieving feature of this regulator a small amount of air will continually vent to the atmosphere. This is normal and amounts to approximately 3 liter/min [0.1 SCFM].

(8) **Main Air Pressure Gauge**
Indicates main air regulator pressure setting. Air regulator should be adjusted so gauge reads 5 bar gauge pressure [70 PSIG].

(9) **Mechanical Latch, Upper Drive Assembly** – Figure 3-6
The mechanical latch is provided to hold the upper drive assembly at the fully raised position for tape threading and maintenance.

To raise and latch the upper drive assembly:

1. Push and hold the upper frame raising switch "A".
2. Push and hold latching knob "B".
3. Release switch "A".
4. Release knob "B".
5. Shut off air supply.

To release and lower the upper drive assembly:

1. Turn on air supply.
2. Push and release switch "A".

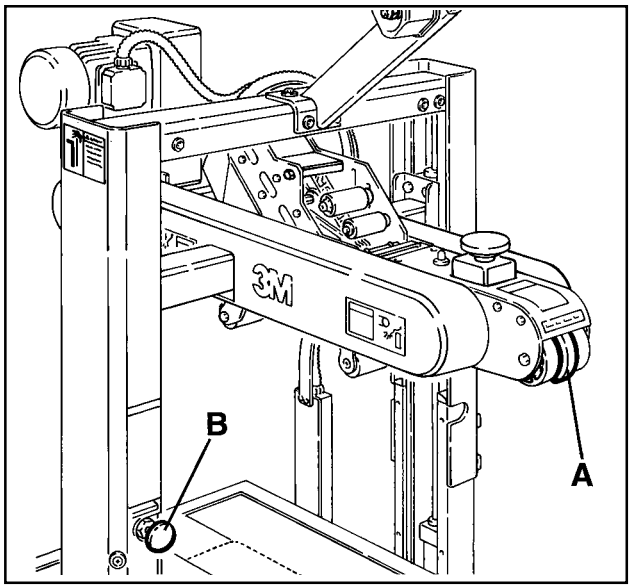

Figure 3-6 – Mechanical Latch, Upper Drive Assembly

(10) **Indicator, Air Pressure**
An "Optical Warning Indicator" for the compressed air circuit of the machine is located on the upper drive assembly just behind the red "Stop" button. When indicator is "Red", air circuit is on.

WARNINGS

1. **Turn electrical and air supply off and disconnect before servicing taping heads or performing any adjustments or maintenance on the machine.**
2. **Do not leave machine running unattended.**
3. **Before turning drive belts on, be sure no tools or other objects are on the machine bed.**
4. **Keep hands and loose clothing away from moving belts.**
5. **Keep hands and clothing away from taping heads when machine is running. A box traveling through the machine causes taping head rollers to retract when box enters and extend as box leaves taping head.**
6. **Never attempt to work on any part of the machine, load tape or remove jammed boxes from the machine while machine is running.**
7. **Be aware of the pneumatically controlled movement of the upper assembly and box centering guides. Keep away from these components when air and electrical supplies are on.**
8. **When feeding boxes to the machine by hand, push box in from end only – DO NOT PUSH WITH HANDS ON ANY CORNER OF THE BOX.**
9. **Do not put hands beneath upper drive assembly when upper drive assembly lowers to its rest position.**
10. **Both the upper and lower taping heads utilize extremely sharp knives. The knives are located under the orange knife guard which has the 'WARNING – SHARP KNIFE" label. Before loading tape, refer to Figures 3-1 and 3-2 in Section II to identify the knife location. Keep hands out of these areas except as necessary to service the taping heads.**
11. **Turn electrical and air supply off when machine is not in use.**
12. **Failure to comply with these warnings could result in severe personal injury and/or equipment damage.**

Tape Loading/Threading

See Section II, Pages 7 and 8

Note – If lower tape drum is mounted in alternate lower outboard position, remove taping head from machine bed by pulling straight up, insert threading needle in taping head and replace taping head. Install tape roll on drum (adhesive on tape leg up), thread tape under knurled roller on outboard mount, then attach tape to threading needle and pull tape through taping head with threading needle.

CAUTION – Taping head weighs approximately 7.2 kg [16 pounds] without tape. Use proper body mechanics when removing or installing taping head.

Theory of Operation

The air supply powers movement of the centering guides and upper drive assembly to automatically adjust the case sealer to the box size being sealed as follows:

1. A box centering switch in the center of the infeed roller conveyor actuates movement of the centering guides. When the operator pushes a box onto the infeed conveyor, as shown in Figure 3-7, the lever is depressed causing the air cylinder powered centering guides to move inward, thereby centering the box.

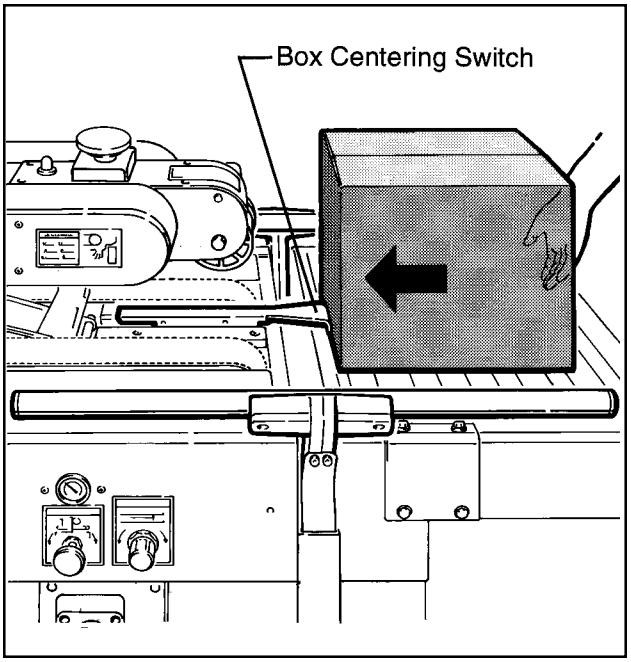

Figure 3-7 – Box Centering Switch

2. Once the box is centered by the guides, the operator pushes the box against the raising switch on the upper drive assembly, as shown in Figure 3-8, causing the upper taping head to be raised by two air cylinders. The upper taping head will continue to rise above the box height so the operator can insert the box underneath the upper drive belts.

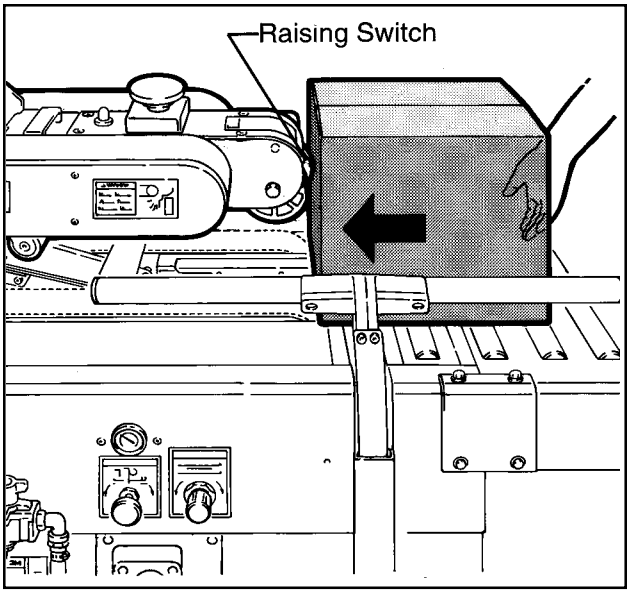

Figure 3-8 – Drive Assembly Raising Switch

WARNING – Keep hands away from drive belts when feeding boxes.

3. Once the box is pushed under the upper taping head, the upper drive assembly raising switch is released causing the upper drive assembly to descend onto the box top, as shown in Figure 3-9, allowing the drive belts to convey the box through the upper and lower taping heads for application of the tape seals.

4. As the box is conveyed through the machine, the box centering switch is released causing the centering guides to return to their full open position, ready for insertion of the next box.

5. Once the box is conveyed from under the upper taping head, the upper drive assembly descends to its rest position, ready for insertion of the next box.

At this point it is recommended that the centering guides and upper drive assembly switches be manually actuated to understand the functions described above. Depressing the box centering switch causes the guides to close, releasing the switch causes the guides to open. Depressing the upper drive assembly raising switch causes the upper drive assembly to rise, releasing the switch causes the drive assembly to descend.

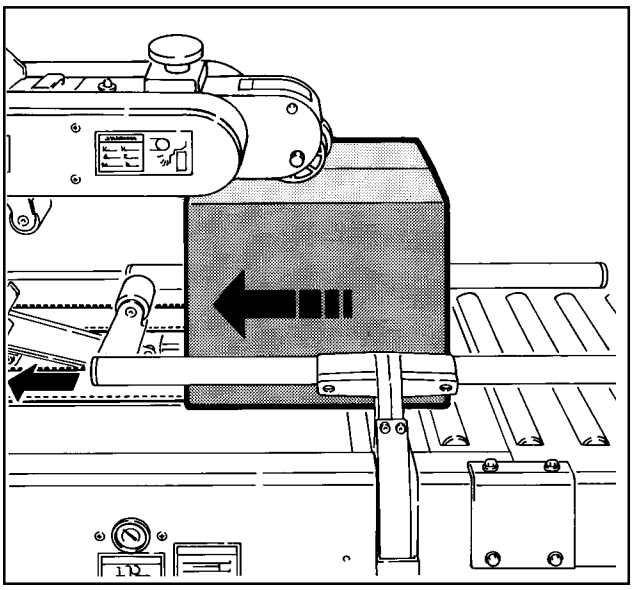

Figure 3-9 – Drive Belts

Box Sealing

1. Turn main air valve to "SUP" (On).

2. Press green electrical pushbutton on side of machine frame to start drive belts.

3. Feed boxes to machine allowing previous box to exit machine BEFORE feeding next box.

4. Turn air and electrical supplies "Off" when machine is not in use.

5. Reload and thread tape as necessary.

6. Be sure machine is cleaned and lubricated according to recommendations in "Maintenence" section of this manual.

Notes –

1. Machine or taping head adjustments are described in "Adjustments" Section I for machine or Section II for taping heads.

2. Box drive motors are designed to run at a moderate temperature of 40°C [104°F]. In some cases, they may feel hot to the touch.

Maintenance

The case sealer has been designed for long, trouble free service. The machine will perform best when it receives routine maintenance and cleaning. Machine components that fail or wear excessively should be promptly repaired or replaced to prevent damage to other portions of the machine or to the product.

WARNING – Turn off electrical power and air supply and disconnect power cord from electrical supply before beginning maintenance. If electrical power is not disconnected, severe injury to personnel could result.

Cleaning

Note – Never attempt to remove dirt from the machine by blowing it out with compressed air. This can cause the dirt to be blown inside the motor and onto sliding surfaces which may cause premature equipment wear. Never wash down or subject equipment to conditions causing moisture condensation on components. Serious equipment damage could result.

Regular slotted containers produce a great deal of dust and paper chips when processed or handled in equipment. If this dust is allowed to build-up on machine components, it can cause component wear and overheating of drive motor. The dust build-up can best be removed from the machine by a shop vacuum. Depending on the number and type of boxes sealed in the case sealer, this cleaning should be done approximately once per month. If the boxes sealed are dirty, or if the environment in which the machine operates is dusty, cleaning on a more frequent basis may be necessary. Excessive dirt build-up that cannot be removed by vacuuming should be wiped off with a damp cloth.

Lubrication

Most of the machine bearings, including the drive motor, are permanently lubricated and sealed and do not require additional lubricant.

Figure 4-1 illustrates the machine points that do require lubrication every 250 hours of operation. Lubricate the points indicated by arrows (⇨) with a small amount of multi-purpose grease.

Note – Wipe off excess oil and grease. It will attract dust which can cause premature equipment wear and jamming. Take care that oil and grease are not left on the surface of rollers around which tape is threaded, as it can contaminate the tape's adhesive.

TAPING HEAD LUBRICATION – See Section II, "Maintenance – Lubrication", page 10.

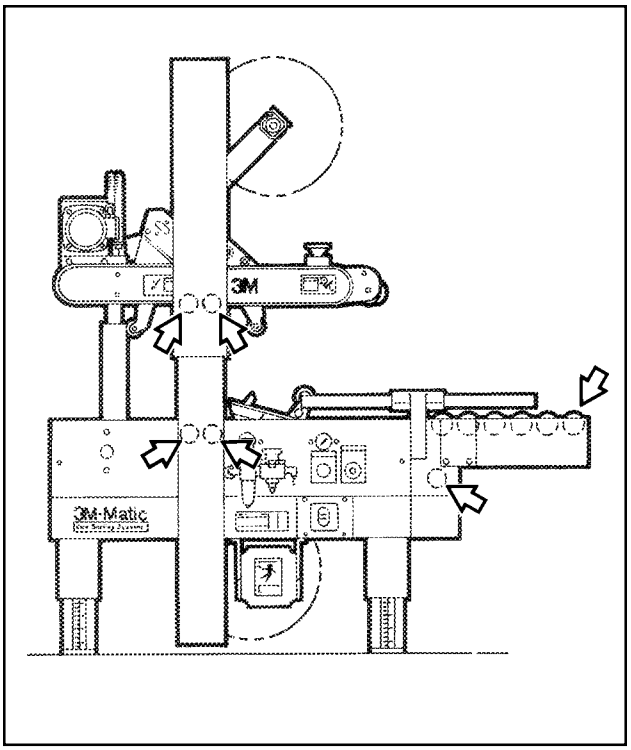

Figure 4-1 – Lubrication Points – Frame

WARNING – Turn off electrical power and air supply and disconnect power cord from electrical supply before beginning maintenance. If power cord is not disconnected, severe injury to personnel could result.

Box Drive Belt Replacement

Note – 3M recommends the replacement of drive belts in pairs, especially if belts are unevenly worn.

LOWER DRIVE BELTS
Figure 4-2

1. Remove and retain center plates **(A)** and four screws.
2. Remove and retain side cover **(B)** and fasteners.
3. Loosen, but do not remove lock nut **(C)**.
4. Loosen tension screw **(D)** until all belt tension is removed.
5. Pull belt splicing pin **(E)** out and remove belt.
6. Place new belt over pulleys with laced splice at top. Insert splicing pin. **Note – Pin must not extend beyond edge of belt.**
7. Adjust belt tension as explained in "Adjustments – Box Drive Belt Tension", Page 25.
8. Replace side cover and center plates and secure with original fasteners.

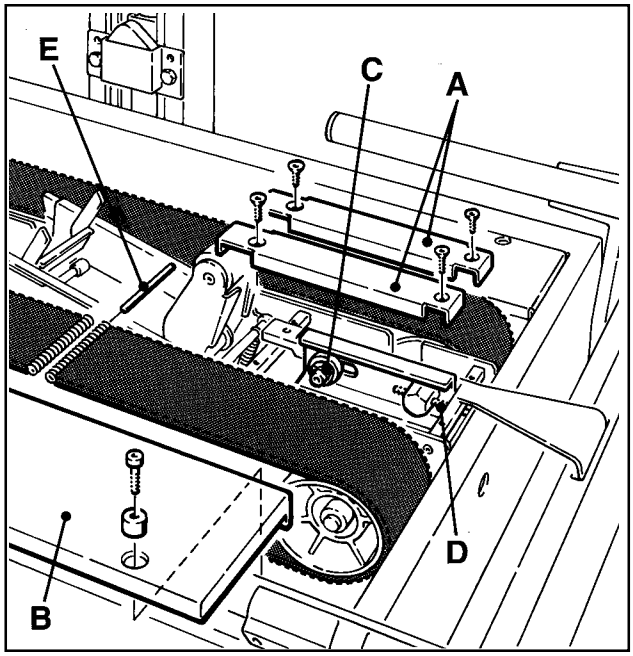

Figure 4-2 – Lower Drive Belt Replacement

UPPER DRIVE BELTS
Figure 4-3

1. Remove and retain center plate **(A)** and four screws and plain washers.
2. Loosen, but do not remove lock nut **(B)**.
3. Loosen tension screw **(C)** until all tension is removed from belt.
4. Remove 4 screws on side of belt guard **(D)** and slide belt guard out to expose belt.
5. Pull belt splicing pin **(E)** out and remove belt.
6. Place new belt over pulleys with laced splice at top. Insert splicing pin. **Note – Pin must not extend beyond edge of belt.**
7. Adjust belt tension as explained in "Adjustments – Box Drive Belt Tension", page 25.
8. Replace front cover and belt guard(s) and secure with original fasteners.

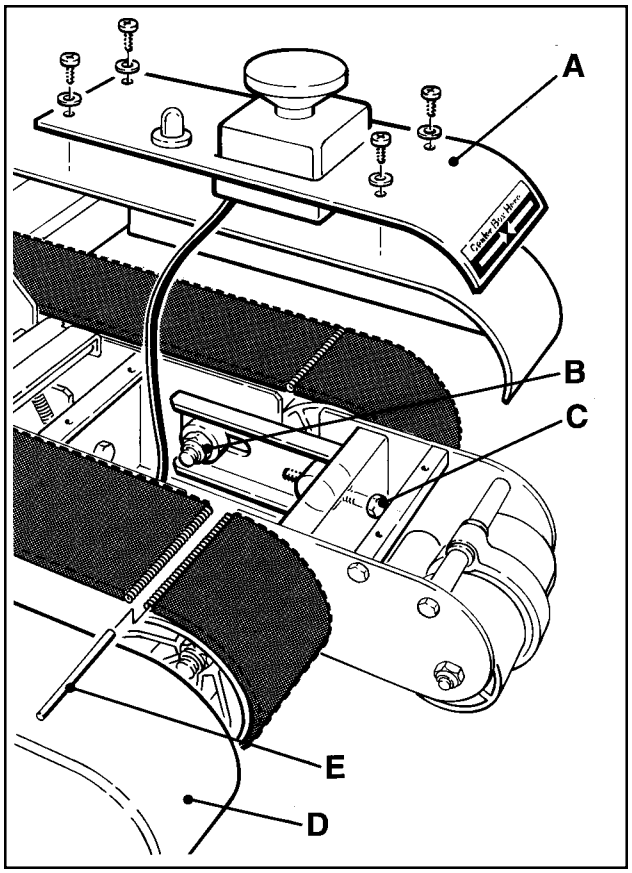

Figure 4-3 – Upper Drive Belt Replacement

WARNING – Turn off electrical power and air supply and disconnect power cord from electrical supply before beginning maintenance. If power cord is not disconnected, severe injury to personnel could result.

Circuit Breaker

The case sealer is equipped with a circuit breaker which trips if the motors are overloaded. Located inside the electrical enclosure on the side of the machine frame just below the machine bed, the circuit breaker has been pre-set at 2.2 amps and requires no further maintenance.

If circuit is overloaded and circuit breaker trips, unplug machine from electrical power:

1. Determine cause of overload and correct.
2. Remove electrical enclosure cover.
3. Press "Reset" and then "Start" buttons on circuit breaker. If circuit breaker will not reset, wait 2 minutes and retry.
4. Replace cover.
5. Plug in machine.
6. Press machine "On" button to resume case sealing.

Knife Replacement, Taping Head

See Section II, "Maintenance – Blade (Knife) Replacement", page 9.

WARNING – Turn off electrical power and air supply and disconnect power cord from electrical supply before beginning adjustments. If power cord is not disconnected, severe injury to personnel could result.

Box Drive Belt Tension

The four continuously moving drive belts convey boxes through the tape applying mechanism. The box drive belts are powered by electric gear motors.

Tension adjustment of these belts may be required during normal operation. Belt tension must be adequate to positively move the box through the machine and the belts should run fully on the surface of the pulleys at each end of the frame. The idler pulleys on the infeed end are adjusted in or out to provide proper belt tension. Each belt is adjusted separately.

Belt tension is obtained by tightening the adjustment screw so that a moderate pulling force of 3.5 kg [7 lbs.] applied at the midspan, as shown in Figure 5-1, will deflect the belt 25 mm [1 inch]. This will assure positive contact between the belt and the drive pulley on the discharge end of the drive assembly. **Note – Figure 5-1 illustrates the lower drive belts, however, upper belts are adjusted in the same manner.**

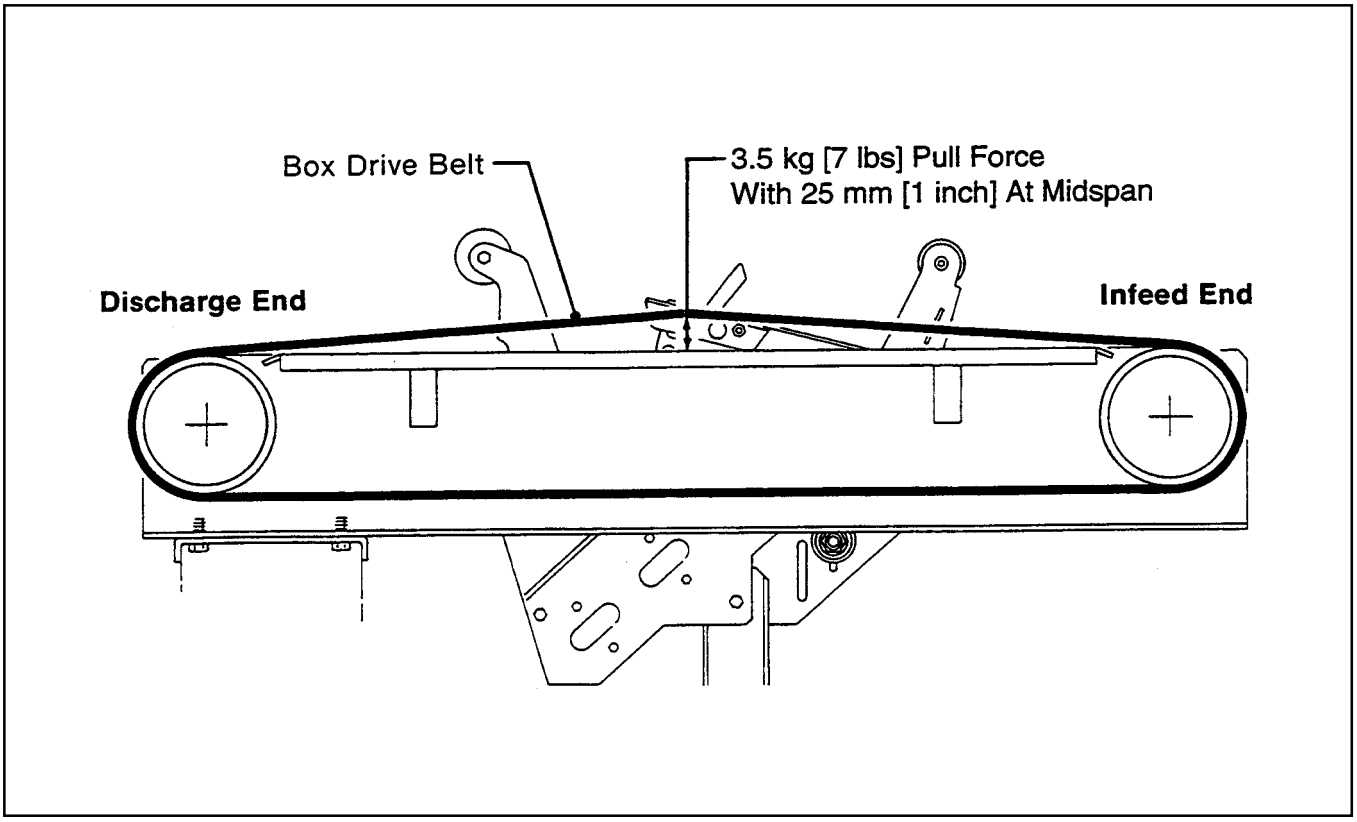

Figure 5-1 – Box Drive Belt Tension Adjustment

WARNING – Turn off electrical power and air supply and disconnect power cord from electrical supply before beginning adjustments. If power cord is not disconnected, severe injury to personnel could result.

Refer to Figure 5-2 and 5-3 and adjust belt tension as follows:

1. Remove and retain center plates/front cover and four screws.
2. Loosen, but do not remove, M10 lock nut with a 17 mm open end wrench.
3. Reset the tension on the drive belts as needed. Adjust the M8 tension screws in (clockwise) to **increase** tension or out (counterclockwise) to **decrease** tension. Tighten lock nut to secure tension setting.
4. Replace center plates/front cover and secure with original screws.

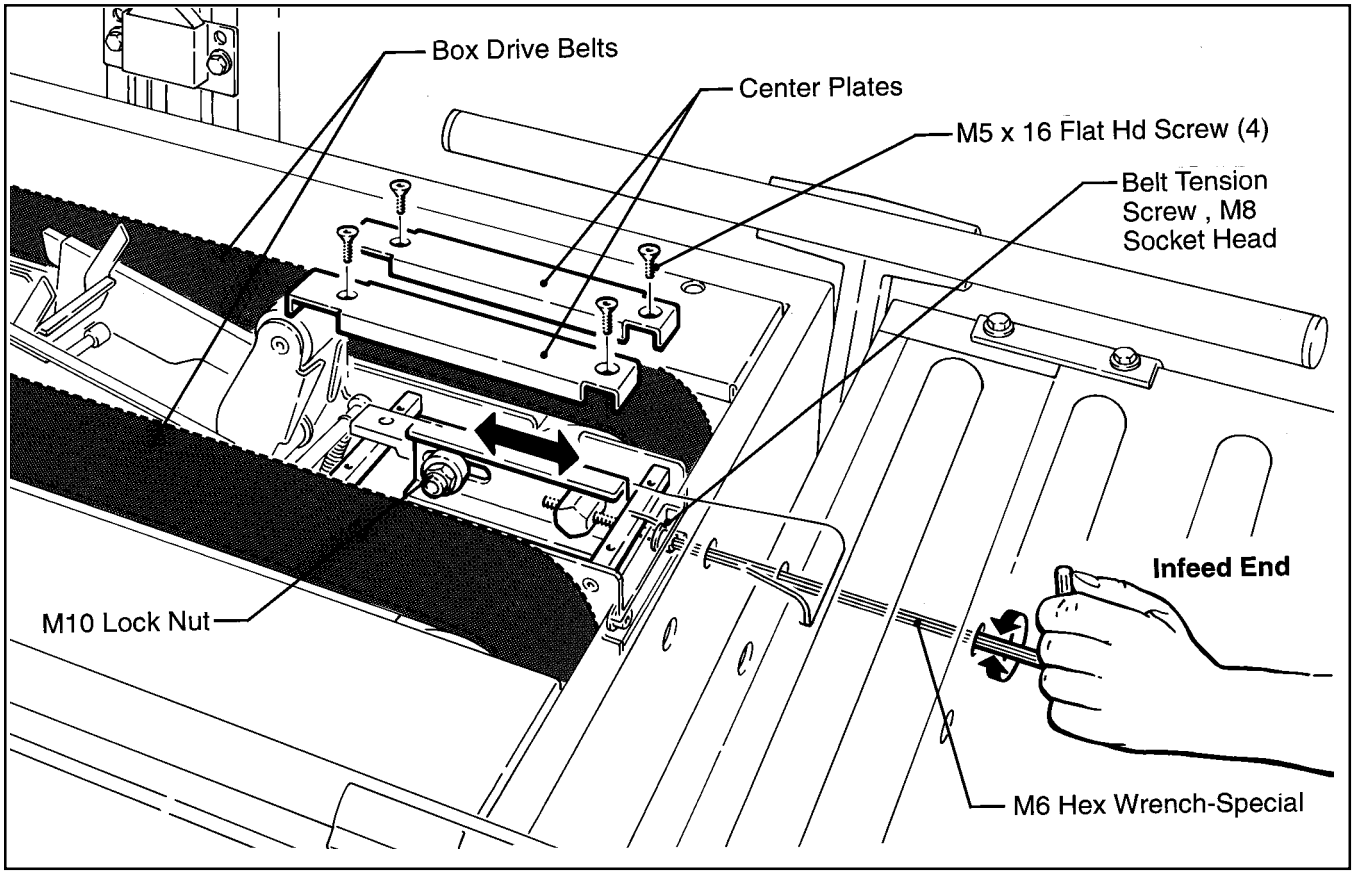

Figure 5-2 – Box Drive Belt Tension Adjustment, Lower Belts (Infeed End)

WARNING – Turn off electrical power and air supply and disconnect power cord from electrical supply before beginning adjustments. If power cord is not disconnected, severe injury to personnel could result.

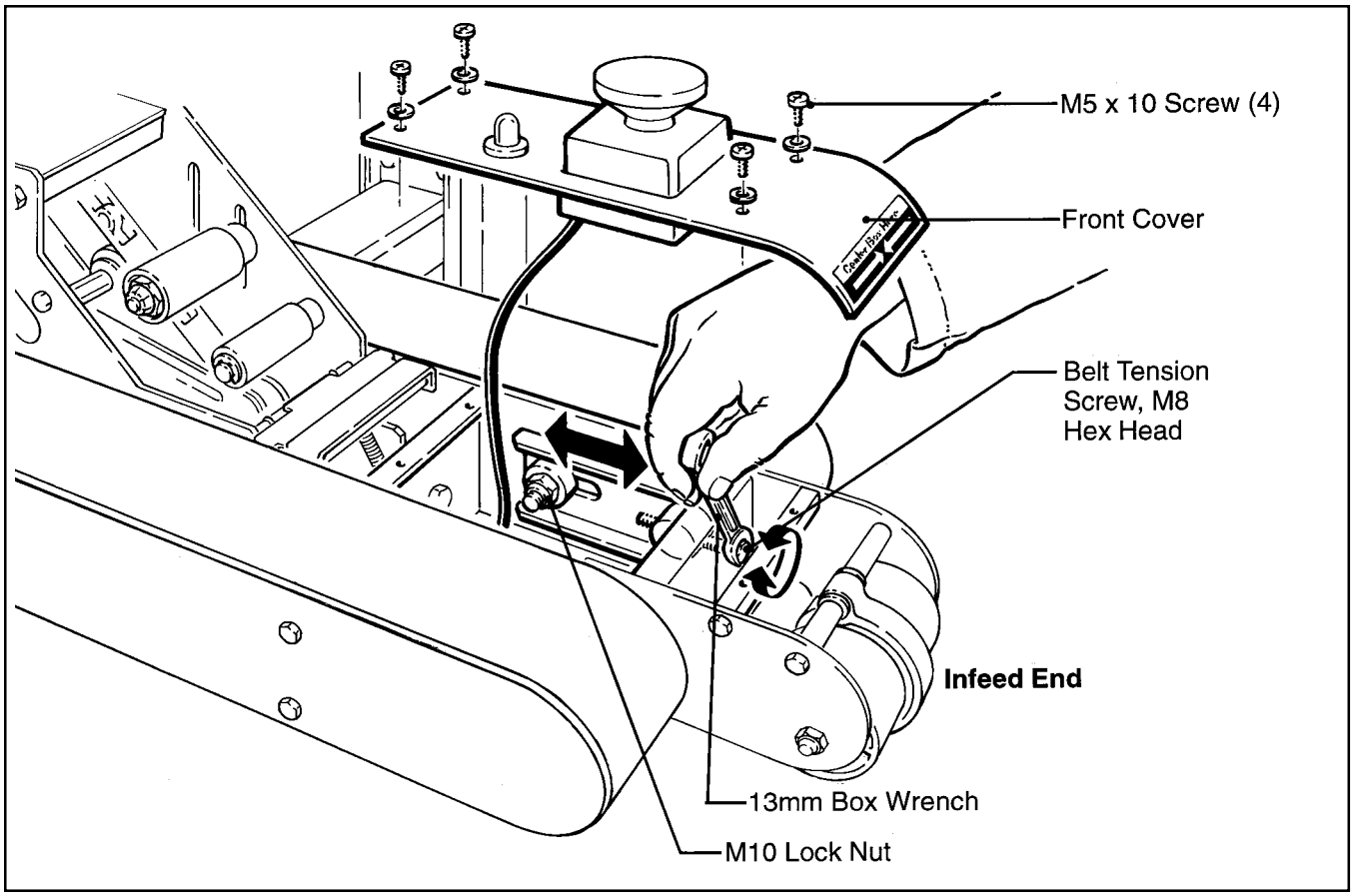

Figure 5-3 – Box Drive Belt Tension Adjustment, Upper Belts (Infeed End)

Taping Head Adjustments – Refer to Section II

WARNING – Use care when working near tape cut-off knifes on taping heads as knifes are extremely sharp. If care is not taken, severe injury to personnel could result.

TAPE WEB ALIGNMENT – Section II, Page 11

TAPE DRUM FRICTION BRAKE – Section II, Page 11

APPLYING MECHANISM SPRING – Section II, Page 12

ONE-WAY TENSION ROLLER – Section II, Page 12

TAPE LEG LENGTH ADJUSTMENT – Section II, Page 13

THIS PAGE IS BLANK

WARNING – Turn off electrical power and air supply and disconnect power cord from electrical supply before beginning Special Set-Up Procedure. If power cord is not disconnected, severe injury to personnel could result.

Changing the Tape Leg Length
(From 70 to 50 mm [2-3/4 to 2 inch])

The following changes to the case sealer frame and upper/lower taping heads reduces the tape leg length to 50 mm [2 inch] and also allows the taping of boxes 95 mm [3.75 inch] minimum height.

CASE SEALER FRAME
(Refer to Figure 6-1A)

1. Raise and latch upper drive assembly in upper position. Turn off air supply and electric power.
2. Remove and retain the screws, washers and bumper support assembly on both side columns. Remount and secure the bumper support assemblies using the top holes and original fasteners.
3. Be sure adjustable split collars on column cylinder rods are loose or clamped at the top of the cylinder rod to allow the upper drive assembly to descend fully.

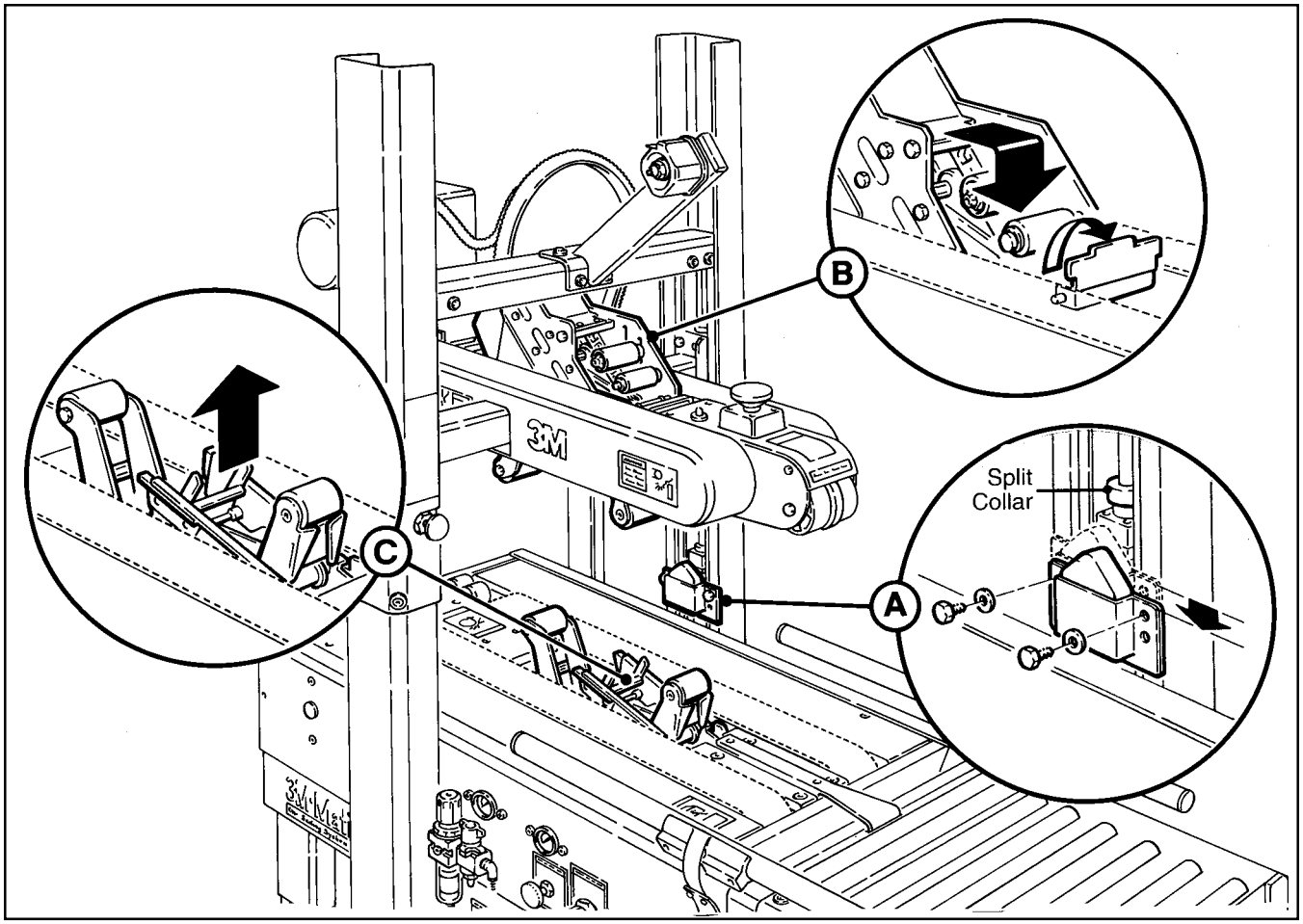

Figure 6-1 – Case Sealer Frame Changes

TAPING HEADS

WARNING – Use care when working near knifes as knifes are extremely sharp. If care is not taken, severe injury to personnel could result.

With upper drive assembly in raised position:

1. Remove tape from upper taping head.
2. Pivot up the clamp that secures the upper taping head as shown in Figure 6-1B.
3. Hold upper taping head applying and buffing arms from under upper assembly, slide head forward and down to remove. See Figure 6-2.

CAUTIONS

1. **Holding taping head in another way may increase the danger of being injured by the tape cut-off knife.**
2. **Taping head weighs approximately 7.2 kg [16 lbs]. Use proper body mechanics when lifting upper or lower taping heads.**

4. Lift the lower taping head, shown in Figure 6-3 and 6-1C, straight up to remove it from the case sealer bed.
5. Refer to Section II, "Adjustments – Changing Tape Leg Length", page 13 for taping head set-up.
6. Replace taping heads reverse of disassembly. Turn on air supply and electric power, unlatch upper drive assembly and allow it to return to its rest position.

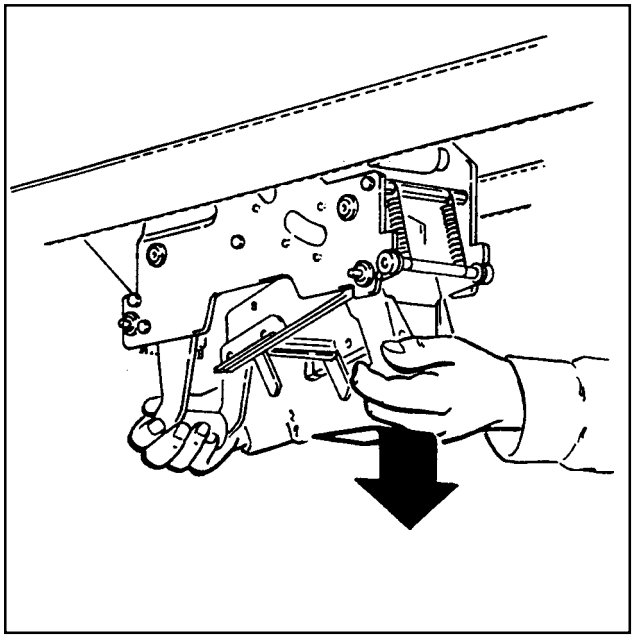

Figure 6-2 – Remove Upper Taping Head

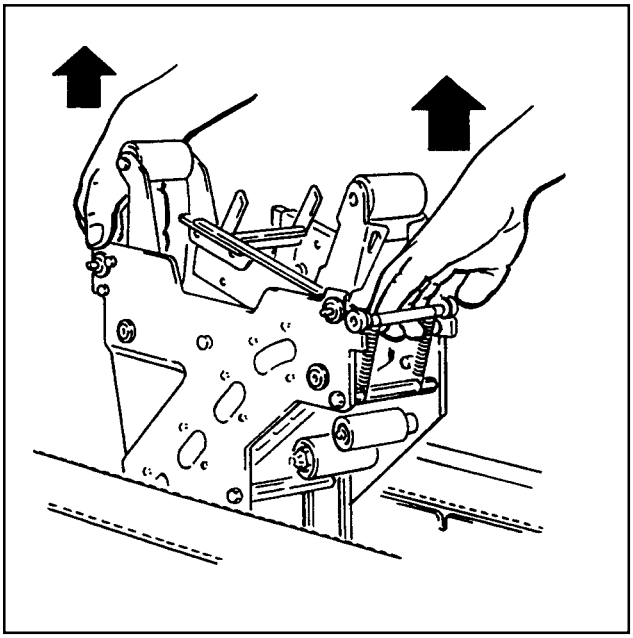

Figure 6-3 – Remove Lower Taping Head

WARNING – Turn off electrical power and air supply and disconnect power cord from electrical supply before beginning Special Set-Up Procedure. If power cord is not disconnected, severe injury to personnel could result.

Box and Machine Bed Height Range – Refer to Figure 6-4

Moving the outer columns up one set of mounting holes increases the maximum box size handled by the 700r case sealer and decreases the minimum machine bed height. **Note – This also increases the minimum box height from 120 mm [4.8 inch] to 170 mm [6.8 inch].**

To move the outer columns up one set of mounting holes:

1. Lift the upper taping head/drive assembly up and place a 200 - 250 mm [8 - 10 inch] block at the front and rear of the upper drive assembly. **Important – Blocks (front and rear) must be same height in order to keep upper drive assembly parallel with machine bed.** Also, block both columns up with solid spacers between outer columns and floor. See Figure 6-4A.
2. Remove and retain the six screws and plain washers that fasten each column to the frame. Figure 6-4B.
3. Lift the outer columns up one set of mounting holes, (100 mm [4 inch]) and place 100 mm [4 inch] spacers between the blocks on the floor and each column. See Figure 6-4C.

WARNING – Blocks and spacers must be capable of supporting the 45.4 Kg [100 pound] weight of the outer columns and upper taping head assembly.

4. Install and tighten the six screws and plain washers in each column that were removed in Step 2. Turn on air supply , raise and lock upper drive assembly in fully raised position and remove all blocks and spacers.

If desired, the bed height can now be decreased to 570 mm [22.5 inch] by adjusting legs upward. (See "Installation and Set-Up – Machine Bed Height", Page 13.)

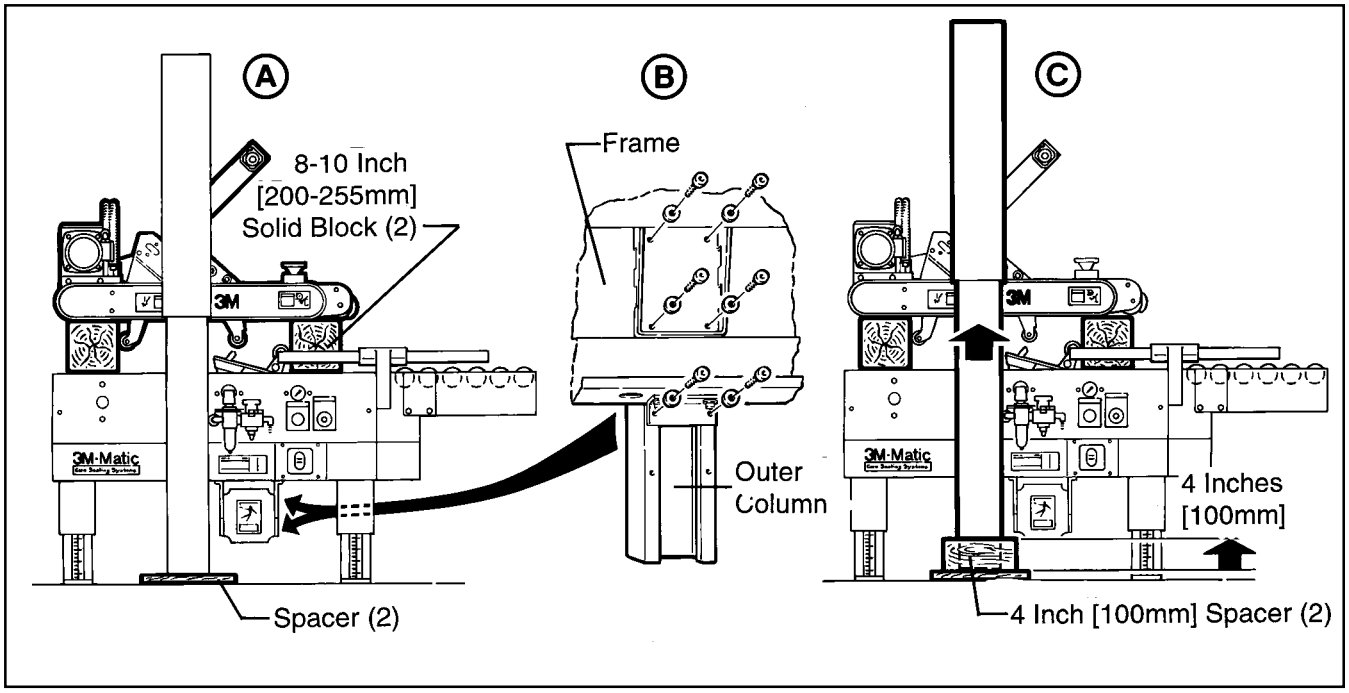

Figure 6-4 – Box and Machine Bed Height Range

WARNING – Turn off electrical power and air supply and disconnect power cord from electrical supply before beginning Special Set-Up Procedure. If power cord is not disconnected, severe injury to personnel could result.

Box Height Range – (Refer to Figure 6-5)

The operating range of the upper drive assembly can be adjusted to minimize its movement to the range of box heights being sealed. Therefore, the operating speed can be increased. The range is established by limiting the lowest position of the drive assembly by positioning the stop bumpers at one of eight different levels on the side columns.

The illustration in Figure 6-5 shows minimum box height with stop bumpers fastened through lower holes (A) at different levels on the side columns. If bumpers are mounted with bolts through upper holes (B), the minimum height of box in each position **decreases** by 20 mm [3/4 inch].

After establishing the minimum box height to be sealed, position the stop bumpers as follows:

1. Latch upper drive assembly in upper position, **turn off air and electric.**

2. Remove and relocate the stop bumper assembly to the desired position on both side columns. Be sure that the stop bumpers are reassembled as shown and secure.

3. Turn on the air and electrical power to the case sealer. The upper taping head will now descend only part way thus increasing operating speed.

In addition to the bumper supports, adjustable split collars are fitted onto the cylinder rods as shown in Figure 6-5. These can be used to stop the down position of the upper assembly at any position. To adjust these collars, position the smallest box to be sealed under the drive belts and stop the machine. Slide the collars on both cylinders down to the cylinder cap and tighten. Upper drive assembly will now stop at this position.

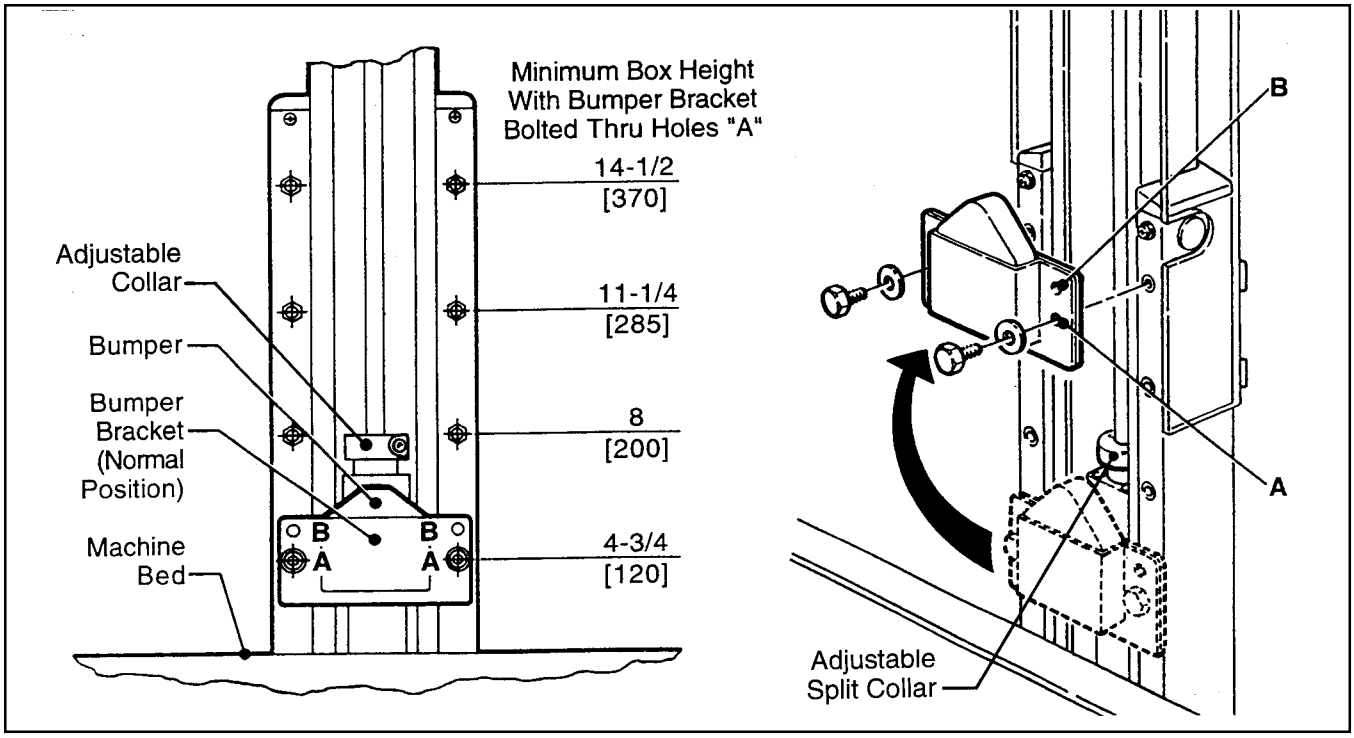

Figure 6-5 – Stop Bumpers

Troubleshooting

The Troubleshooting Guide lists some possible machine problems, causes and corrections. Also see Section II "Troubleshooting", pages 15 and 16 for taping head problems.

Troubleshooting Guide

Problem	Cause	Correction
Drive belts do not convey boxes	Narrow boxes	Check machine specifications. Boxes are narrower than recommended, causing slippage and premature belt wear.
	Worn drive belts	Replace drive belts
	Top taping head does not apply enough pressure	Adjust the upper drive assembly force adjust regulator to increase the fore against the top of the box. Turn air regulator counterclockwise
	Taping head applying spring holder missing	Replace spring holder
	Taping head applying spring set too high	Reduce spring pressure
Drive belts do not turn	Worn or missing friction rings	Replace friction rings
	Drive belt tension too low	Adjust belt tension
	Electrical disconnect	Check power and electrical plug
	Circuit breaker not at correct setting	Set to correct current value
	Motor not turning	Evaluate problem and correct
Upper and lower applying mechanisms interfere with each other	Machine's minimum height stop does not match tape head leg length setting	Check manual to make sure taping heads match machine setting
Drive belts break	Worn belt	Replace belt
Squeaking noise as boxes pass through machine	Dry compression rollers	Lubricate compression rollers
	Dry column bearings	Lubricate column bearings
	Defective column bearings	Replace column bearings
Tape not centered on box seam	Tape drum not centered	Reposition tape drum
	Centering guides not centered	Adjust centering guides
	Box flaps not of equal length	Check box specifications

(Continued)

Troubleshooting Guide

Problem	Cause	Correction
Upper drive assembly does not move up or moves up slowly	Lower air pressure	Disconnect the air supply. Make sure main pressure regulator reads zero. Reconnect air supply and adjust regulator to read 70 PSIG [5 bar].
	Defective head raising valve	Clean or replace head raising valve
	Worn head raising valve actuator	Replace valve
	Clogged or damaged exhaust mufflers on the upper ends of the head raising cylinders	Clean or replace exhaust mufflers
	Defective head power valve	Clean or replace the head power valve
Upper taping head does not move down at the end of the taping cycle	Upper drive assembly force adjust regulator set too light	Adjust the upper drive assembly force adjust regulator to increase the force against the top of the box. Turn air regulator counterclockwise.
	Defective top drive assembly force adjust regulator	Replace regulator
	Defective one-way valve	Clean or replace valve
	Defective head power valve	Clean or replace valve
Upper drive assembly comes down too fast or too hard	Upper drive assembly force adjust regulator set too heavy	Adjust upper drive assembly force adjust regulator to decrease force against top of box. Turn regulator clockwise.
	Defective upper drive assembly force adjust regulator	Replace regulator
	Cushion screw misadjusted	Adjust cushion screw at base of cylinder
	Cushion screw missing	Replace screw
Centering guides move slower than normal	Centering guide force adjust regulator set too low	Adjust regulator
	Centering guide cylinder speed controls not in correct adjustment	Adjust speed controls mounted on centering guide cylinder
	Defective centering guide power valve	Clean or replace valve

Electrical Diagram

WARNING – Turn off electrical power and disconnect power cord from electrical supply before beginning service. If power cord is not disconnected, personnel could be exposed to dangerous voltages that could cause severe injury or equipment damage.

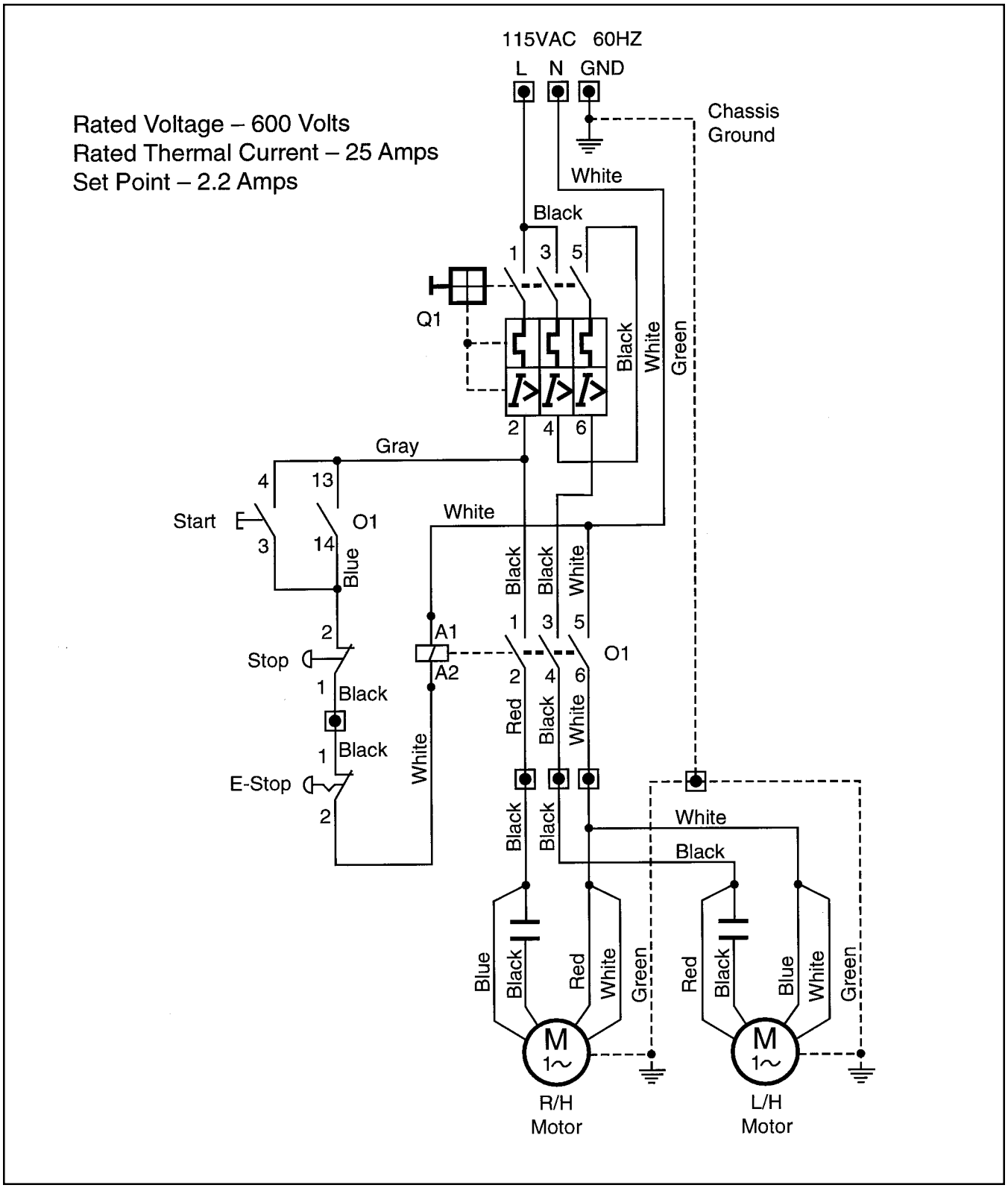

Figure 7-1 – Electrical Diagram

Pneumatic Diagram

WARNING – Turn off and disconnect air supply before beginning service. If air supply is not disconnected, severe injury or equipment damage could result.

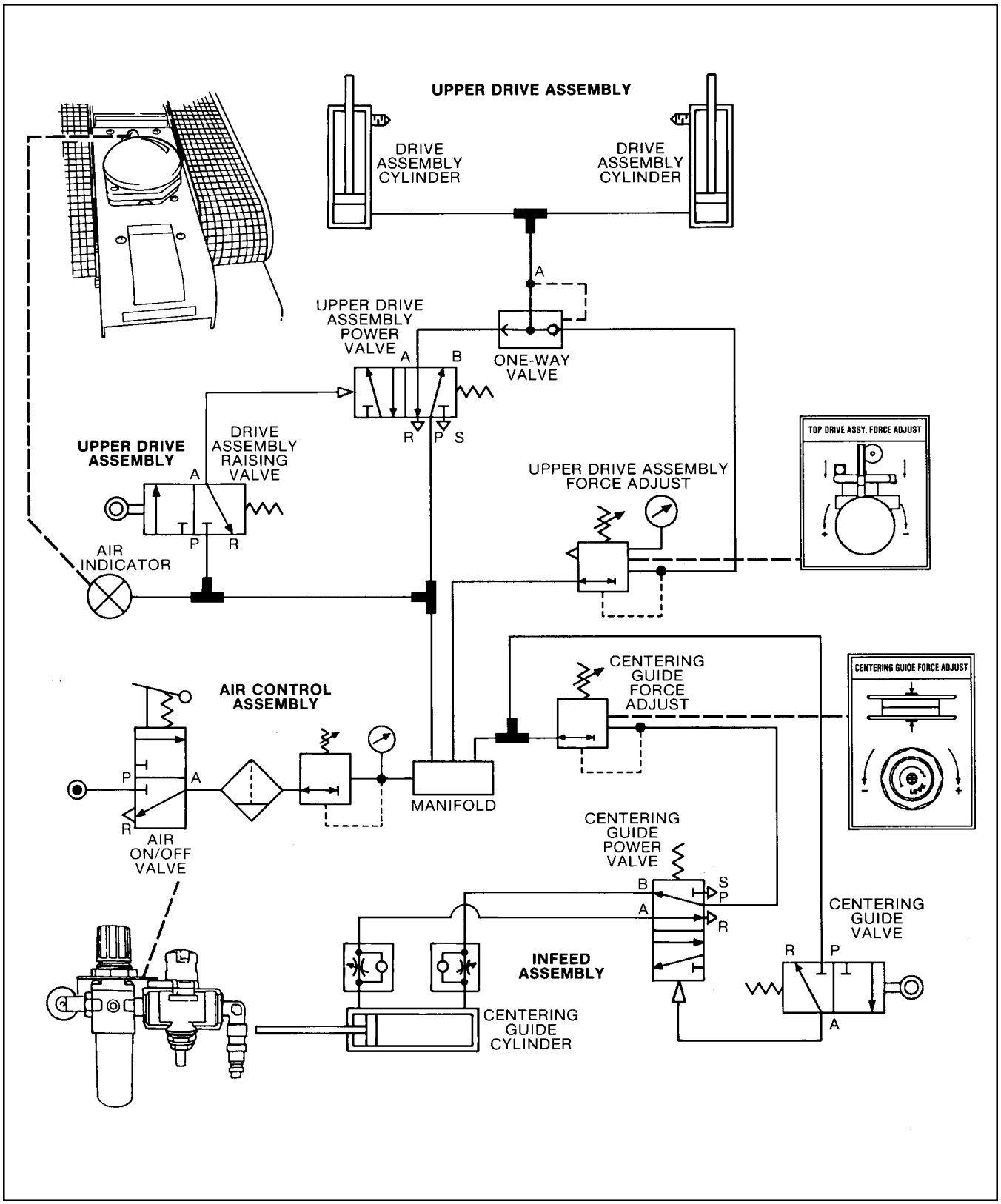

Figure 8-1 – Pneumatic Diagram

Replacement Parts And Service Information

Spare Parts

The following parts are normal wear items and should be ordered and kept on hand as used.

Qty.	Ref. No.	Part Number	Description
4	5916-43 & 5918-60	78-8070-1531-4	Belt – Drive W/Pin

In addition, a tool/spare parts kit supplied with the 700r Random Case Sealer contains the following spare parts:

Qty.	Ref. No.	Part Number	Description
1	2881-10 (Sec. II)	78-8070-1274-1	Spring – Upper Extension (Silver)
1	2886-10 (Sec. II)	78-8070-1273-3	Spring – Lower Extension (Black)
2	2883-2 (Sec. II)	78-8017-9173-8	Knife – 65 mm/2.56 /Inch
4	2883-12 (Sec. II)	78-8052-6602-6	Spring – Cutter

All the above listed parts can be ordered separately and when used should be ordered and kept on hand for spares.

Also see Section II, page 17 for recommended taping head spare parts.

Label Kit

In the event that any labels are damaged or destroyed, **they must be replaced to ensure operator safety.** A label kit, part number 78-8098-9177-9 is available as a stock item. It contains all the safety labels used on the 700r Random Case Sealer.

Tool Kit

A tool kit, part number 78-8076-4950-0, is supplied with the machine. The kit contains the necessary open end and hex socket wrenches for use with the metric fasteners on the case sealer. The threading tool, part number 78-8076-4726-4, contained in above kit is also available as a replacement stock item.

Replacement Parts Ordering Information and Service

Refer to the first page of this instruction manual "Replacement Parts and Service Information".

Options/Accessories

For additional information on the options/accessories listed below, contact your 3M Representative.

Part Number	Option/Accessory
78-8069-3983-7	Caster Kit Attachment
78-8069-3924-1	Conveyor Extension Attachment (exit only)
78-8069-3926-6	Low Tape Sensor Kit
78-8114-0828-1	AccuGlide II STD 2 Inch Upper Taping Head, Type 39600
78-8114-0829-9	AccuGlide II STD 2 Inch Lower Taping Head, Type 39600
78-8079-5560-0	Tape Application Sensor
78-8095-4854-4	2-Inch Tape Edge Fold Attachment, Upper Head
78-8095-4855-1	2-Inch Tape Edge Fold Attachment, Lower Head

700r Random Case Sealer, Type 39600
Frame Assemblies

To Order Parts:

1. Refer to first illustration, **Frame Assemblies,** page 41 for the **Figure Number** that identifies a specific portion of the machine.

2. Refer to the appropriate **Figure or Figures** to determine the parts required and the parts reference number.

3. The Parts List that follows each illustration, includes the **Reference Number, Part Number** and **Part Description** for the parts on that illustration.

Note – The complete description has been included for standard fasteners and some commercially available components. This has been done to allow obtaining these standard parts locally, if desired.

4. Order parts by **Part Number, Part Description** and **Quantity** required. Also include machine name, number and type.

5.. Refer to the first page of this instruction manual **"Replacement Parts and Service Information"** for replacement parts ordering information.

IMPORTANT – Not all the parts listed are normally stocked items. Some parts or assemblies shown are available only on special order. Contact 3M/Tape Dispenser Parts to confirm item availability.

THIS PAGE IS BLANK

700r Random Case Sealer

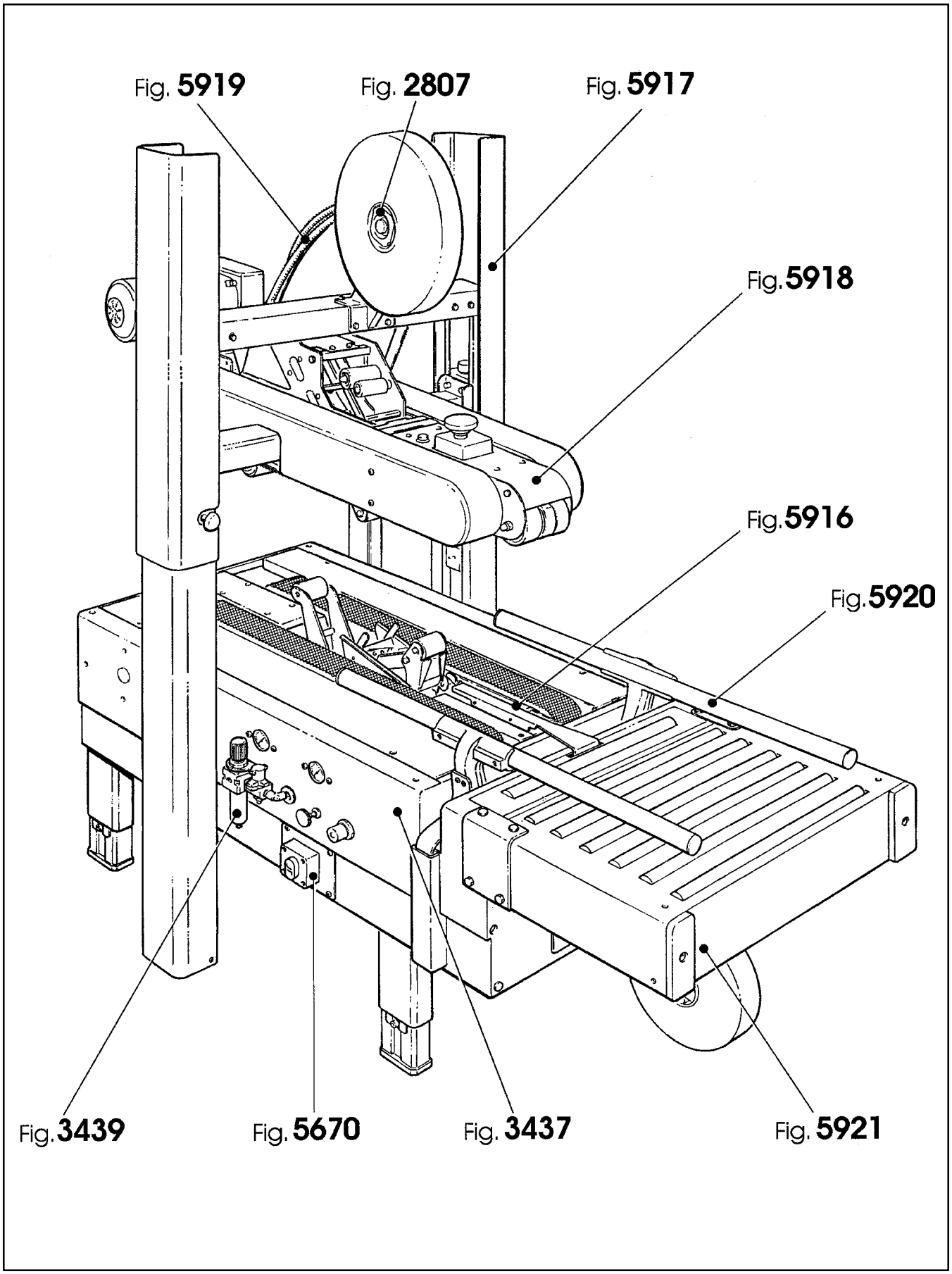

Frame Assemblies

700r Random Case Sealer

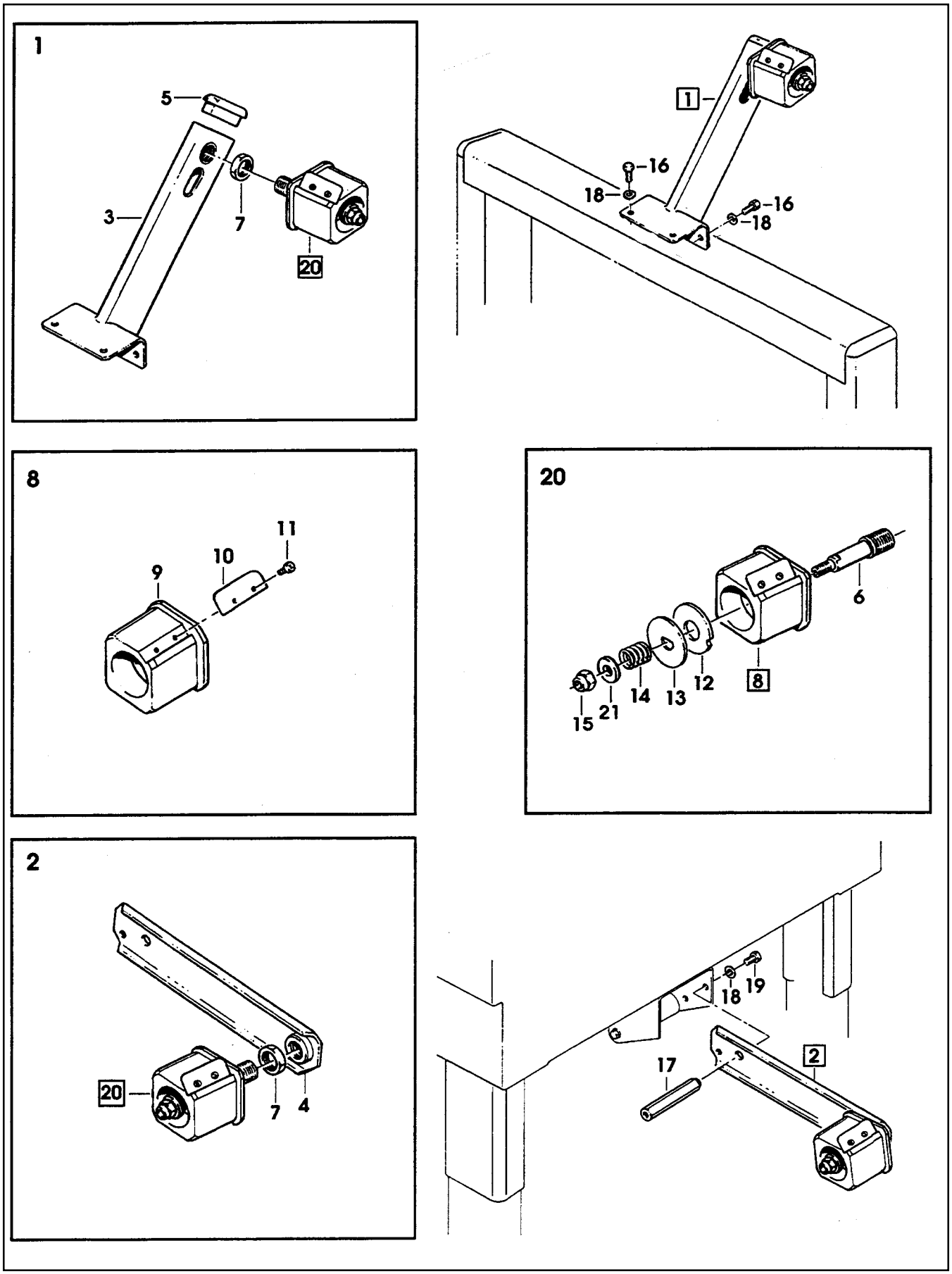

Figure 2807

Figure 2807

Ref. No.	3M Part No.	Description
2807-1	78-8076-4633-2	Tape Roll Bracket Assembly
2807-2	78-8070-1565-2	Tape Drum Bracket Assembly
2807-3	78-8070-1566-0	Bracket – Tape Drum
2807-4	78-8070-1395-4	Bracket – Bushing Assembly
2807-5	78-8070-1568-6	Cap – Bracket
2807-6	78-8076-4519-3	Shaft – Tape Drum
2807-7	78-8017-9169-6	Nut – M18 x 1
2807-8	78-8070-1569-4	Tape Drum Assembly - 2 Inch
2807-9	78-8052-6749-5	Tape Drum
2807-10	78-8052-6268-6	Leaf Spring
2807-11	26-1002-5753-9	Screw – Self Tapping
2807-12	78-8060-8172-1	Washer – Friction
2807-13	78-8052-6271-0	Washer – Tape Drum
2807-14	78-8100-1048-4	Spring – Core Holder
2807-15	78-8017-9077-1	Nut – Self Locking, M10 x 1
2807-16	78-8032-0375-7	Screw – Hex Hd, M6 x 16
2807-17	78-8070-1215-4	Spacer – Stud
2807-18	26-1000-0010-3	Washer – Flat, M6
2807-19	78-8010-7169-3	Screw – Hex Hd, M6 x 12
2807-20	78-8060-8474-1	Tape Drum Assembly – 2 Inch Head

700r Random Case Sealer

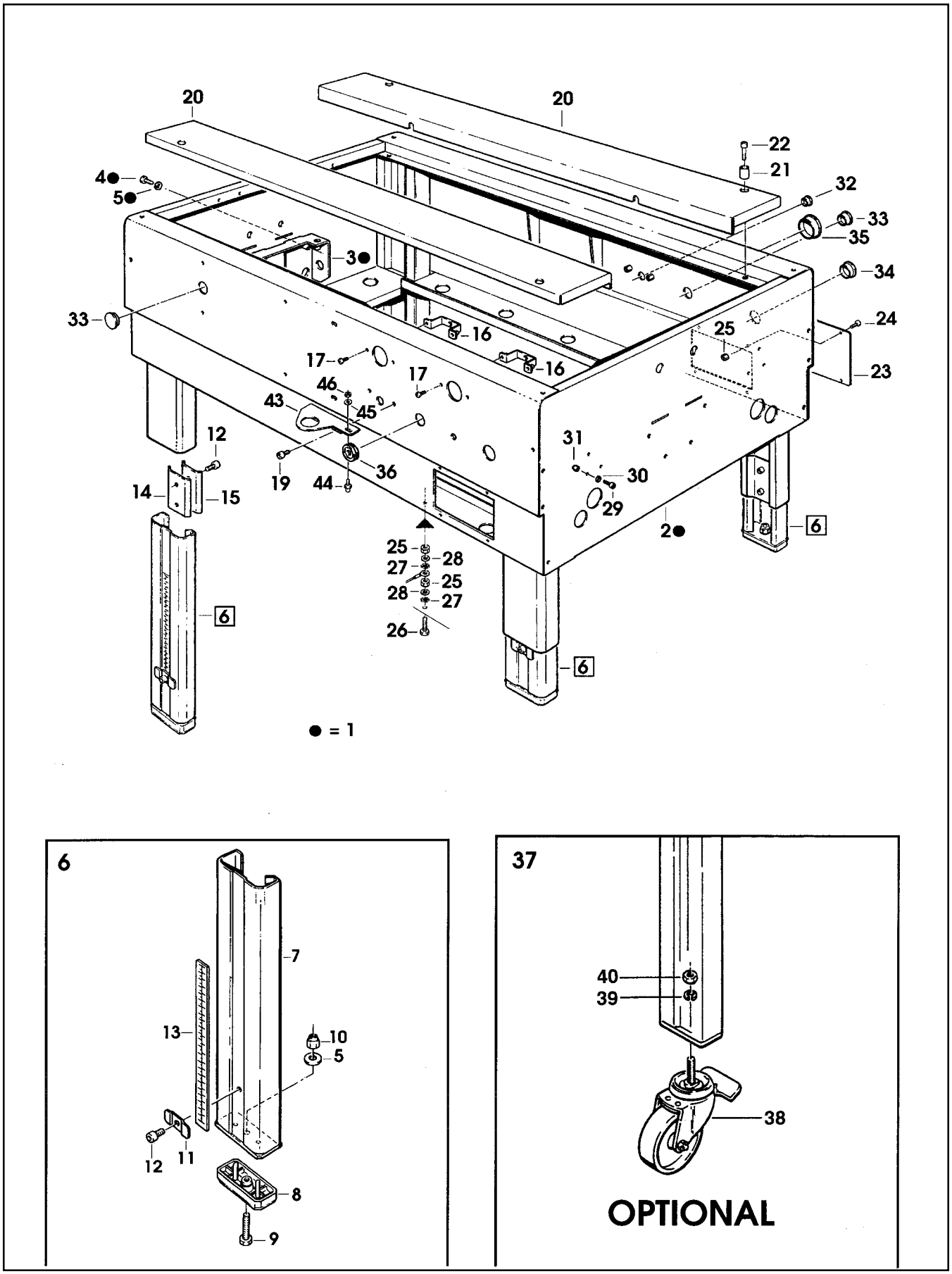

Figure 3437

Figure 3437

Ref. No.	3M Part No.	Description
3437-1	78-8091-0320-9	Conveyor Bed Assembly
3437-2	78-8091-0321-7	Bed – Conveyor
3437-3	78-8091-0307-6	Support – Drive
3437-4	26-1003-5842-8	Screw – Hex Hd, M8 x 20
3437-5	78-8017-9318-9	Washer – Plain, 8 mm
3437-6	78-8076-5381-7	Leg Assembly – Inner, W/Stop
3437-7	78-8076-5382-5	Leg – Inner
3437-8	78-8060-8480-8	Pad – Foot
3437-9	78-8055-0867-4	Screw – Hex Hd, M8 x 30
3437-10	78-8017-9313-0	Nut – Self Locking, M8
3437-11	78-8076-5383-3	Stop – Leg
3437-12	26-1003-7963-0	Screw – Soc Hd, M8 x 16
3437-13	78-8060-8481-6	Label – Height
3437-14	78-8052-6677-8	Clamp – Inner
3437-15	78-8052-6676-0	Clamp – Outer
3437-16	78-8076-4535-9	Bracket
3437-17	78-8076-4625-8	Screw – Special, M5 x 16
3437-19	78-8010-7209-7	Screw – Soc Hd, M6 x 12
3437-20	78-8119-6578-5	Plane – Conveyor Bed, L/H W/English Label
	78-8119-6577-7	Plane – Conveyor Bed, R/H W/English Label
3437-21	78-8060-8486-5	Bushing
3437-22	78-8010-7211-3	Screw – Soc Hd, M6 x 25
3437-23	78-8060-8487-3	Cover – Switch
3437-24	78-8060-8087-1	Screw – M5 x 10
3437-25	78-8010-7417-6	Nut – M5
3437-26	78-8060-8488-1	Screw – Hex Hd, M5 x 20
3437-27	78-8046-8217-3	Washer – Special
3437-28	78-8005-5741-1	Washer – Plain, M5
3437-29	78-8076-4537-5	Screw – Soc Hd, M3 x 25
3437-30	78-8076-4538-3	Washer – Flat, M3
3437-31	78-8059-5517-2	Nut – Self Locking, M3
3437-32	78-8076-4517-7	End Cap – /22 x 1
3437-33	78-8076-4701-7	Cap – /28
3437-34	78-8060-8184-6	Cap – /35 x 1,5
3437-35	78-8076-4536-7	Cap – /45 x 1,5
3437-36	78-8076-4702-5	Grommet – /28
3437-37	78-8098-9076-3	Caster Assembly
3437-38	26-1009-9096-4	Caster – Dual Locking
3437-39	26-1009-9094-9	Washer – Spring Helical, M12
3437-40	26-1009-9095-6	Nut – M12
3437-43	78-8091-0717-6	Support – R/H, Filter Assembly
3437-44	78-8091-0613-7	Shaft – Valve
3437-45	26-1000-0010-3	Washer – Flat, M6
3437-46	78-8010-7418-4	Nut – Hex, M6
3437-43	78-8091-0717-6	Support – R/H, Filter Assembly
3437-44	78-8091-0613-7	Shaft – Valve
3437-45	26-1000-0010-3	Washer – Flat, M6
3437-46	78-8010-7418-4	Nut – Hex, M6

700r Random Case Sealer

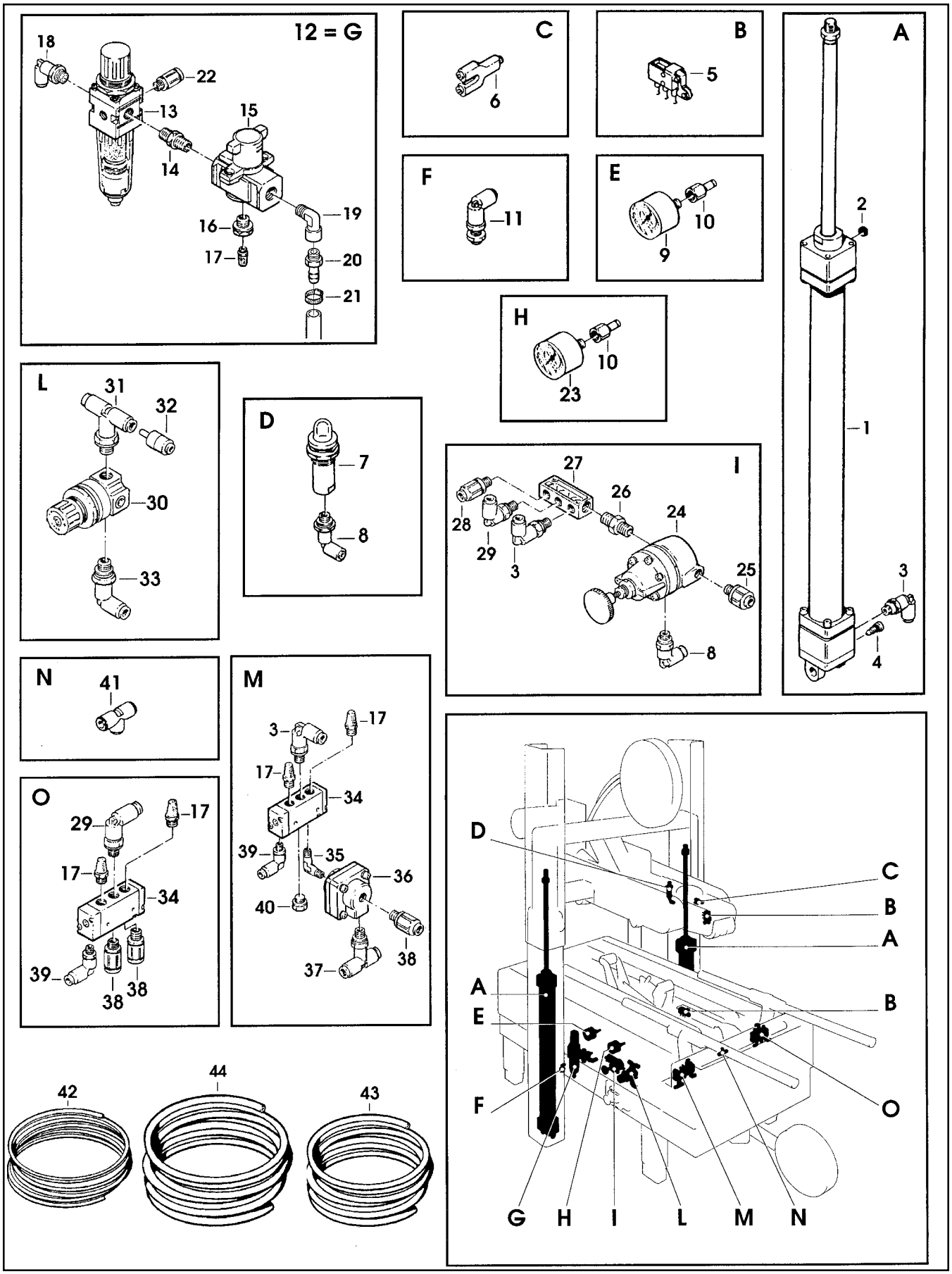

Figure 3439

Figure 3439

Ref. No.	3M Part No.	Description
3439-1	78-8076-4663-9	Cylinder – Air /32 x 580 + 20
3439-2	78-8094-6457-7	Cap – 1/8 Inch
3439-3	78-8091-0313-4	Elbow – 3199.08.10
3439-4	78-8076-4680-3	Screw – Cushioning, Cyl/32
3439-5	78-8060-8091-3	Valve – R/O-3-PK-3
3439-6	78-8076-4664-7	Union – Female
3439-7	78-8076-4665-4	Indicator – Visual
3439-8	26-1005-5909-0	Elbow
3439-9	78-8054-8838-0	Gauge – Air
3439-10	78-8076-4672-0	Union – Straight, Female
3439-11	78-8091-0350-6	Union – Special
3439-12	78-8091-0314-2	Filter – EAW 2000, W/O Gage
3439-13	26-1014-4558-8	Filter – Regulator, W/Metal Bowl
3439-14	78-8060-7899-0	Nipple – RA 012 1/4 - 1/4
3439-15	78-8076-4669-6	Valve – On/Off
3439-16	78-8076-4670-4	Reduction – 3/8 - 1/8
3439-17	26-1005-6890-1	Muffler
3439-18	78-8091-0315-9	Elbow – 3199.08.13
3439-19	78-8060-7900-6	Union – RA 002 1/4 - 1/4
3439-20	26-1005-6897-6	Hose Connector
3439-21	78-8091-0430-6	Clamp – /14-24
3439-22	78-8060-7853-7	Union – Straight MR12-04-18
3439-23	78-8076-4671-2	Gauge – Pressure
3439-24	78-8076-4673-8	Regulator – Pressure
3439-25	26-1005-6901-6	Union – Straight
3439-26	78-8076-4674-6	Nipple – 1/4 - 1/8
3439-27	78-8059-5633-7	Air Distributor
3439-28	78-8091-0316-7	Union – Straight, 3101.08.10
3439-29	26-1005-6893-5	Elbow – 90°
3439-30	78-8076-4675-3	Regulator – 0,5-7 Bar
3439-31	78-8076-4676-1	Union
3439-32	78-8057-5735-4	Fitting – Reducer MR25-04-06
3439-33	78-8055-0756-9	Union – Rotating MR41-06-14
3439-34	78-8076-4677-9	Valve – V2A 5120-01
3439-35	78-8017-9426-0	Elbow – 90°, 1/8 M x 1/8 M
3439-36	78-8076-4678-7	Valve – One-Way
3439-37	78-8091-0317-5	Union – Tee, 3198.08.10
3439-38	26-1005-6910-7	Union – Straight
3439-39	78-8057-5732-1	Fitting – Elbow MR41-04-05
3439-40	78-8060-7690-3	Cap – B-1/8
3439-41	78-8076-4679-5	Union – Tee
3439-42	78-8119-8666-6	Tube – Air, 4 mm O.D. x 2.5 mm I.D.
3439-43	78-8119-8667-4	Tube – Air, 6 mm O.D. x 4 mm I.D.
3439-44	78-8119-8668-2	Tube – Air, 8 mm O.D. x 5 mm I.D.
3439	78-8060-8175-4	Repair Kit for Cylinder /32

700r Random Case Sealer

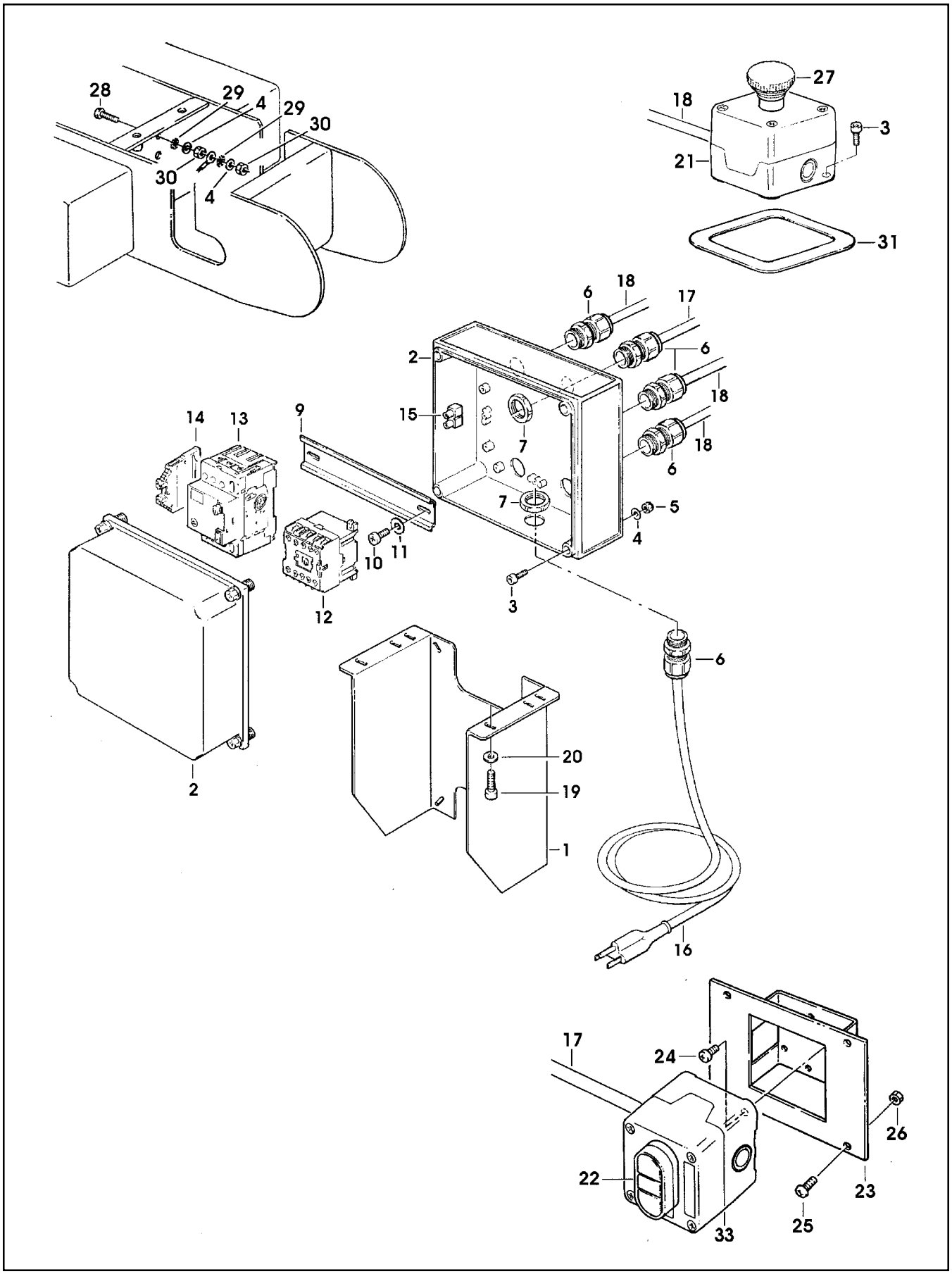

Figure 5670

Figure 5670

Ref. No.	3M Part No.	Description
5670-1	78-8094-6379-3	Support – Box
5670-2	78-8113-6759-4	Box – W/English Language Label
5670-3	78-8094-6381-9	Screw – Soc Hd, Hex Hd, M4 x 15
5670-4	78-8005-5740-3	Washer – Plain, 4 mm
5670-5	26-1003-6914-4	Nut – Plastic Insert, M4
5670-6	78-8076-4715-7	Cord Grip
5670-7	78-8076-5211-6	Set Nut – GMP 13.5
5670-9	78-8094-6382-7	Guide – Mounting
5670-10	78-8028-8208-0	Screw – 6Px9,5
5670-11	78-8017-9018-5	Washer – Plain, M4
5670-12	78-8094-6383-5	Contactor – CA4-5-10, 110V, 60Hz
5670-13	78-8076-5378-3	Switch – Thermal, KTA-3-25
5670-14	78-8094-6384-3	Clamp – VGPE 4/6
5670-15	78-8076-4968-2	Terminal
5670-16	78-8028-7909-4	Power Cord – U.S.A.
5670-17	78-8100-1038-5	Cable – 4 x 20 AWG, 5 MT
5670-18	78-8060-8053-3	Wire – 3-Pole, 5 Meters Length
5670-19	26-1003-7957-2	Screw – Soc Hd Hex, M6 x 16
5670-20	26-1000-0010-3	Washer – Flat, M6
5670-21	78-8076-5194-4	Box – E-Stop
5670-22	78-8094-6386-8	Switch – On/Off, DM3N-C-01/10 (pushbutton and 1 N.O., 1 N.C. contact block)
5670-23	78-8113-6887-3	Support – On/Off Switch, w/English Language Label
5670-24	78-8017-9257-9	Screw – Phil Hd, M4 x 10
5670-25	78-8060-8087-1	Screw – M5 x 10
5670-26	78-8010-7417-6	Nut – Hex, M5
5670-27	26-1014-5845-8	E-Stop – 800EM-MTS44-3LX01
5670-28	78-8091-0538-6	Screw – Hex Hd, M4 x 20
5670-29	78-8076-4716-5	Star Washer – M4
5670-30	78-8010-7416-8	Nut – Hex, M4
5670-31	78-8100-1234-0	Bezel
5670-33	78-8114-4896-4	Box – On/Off, Grey

700r Random Case Sealer

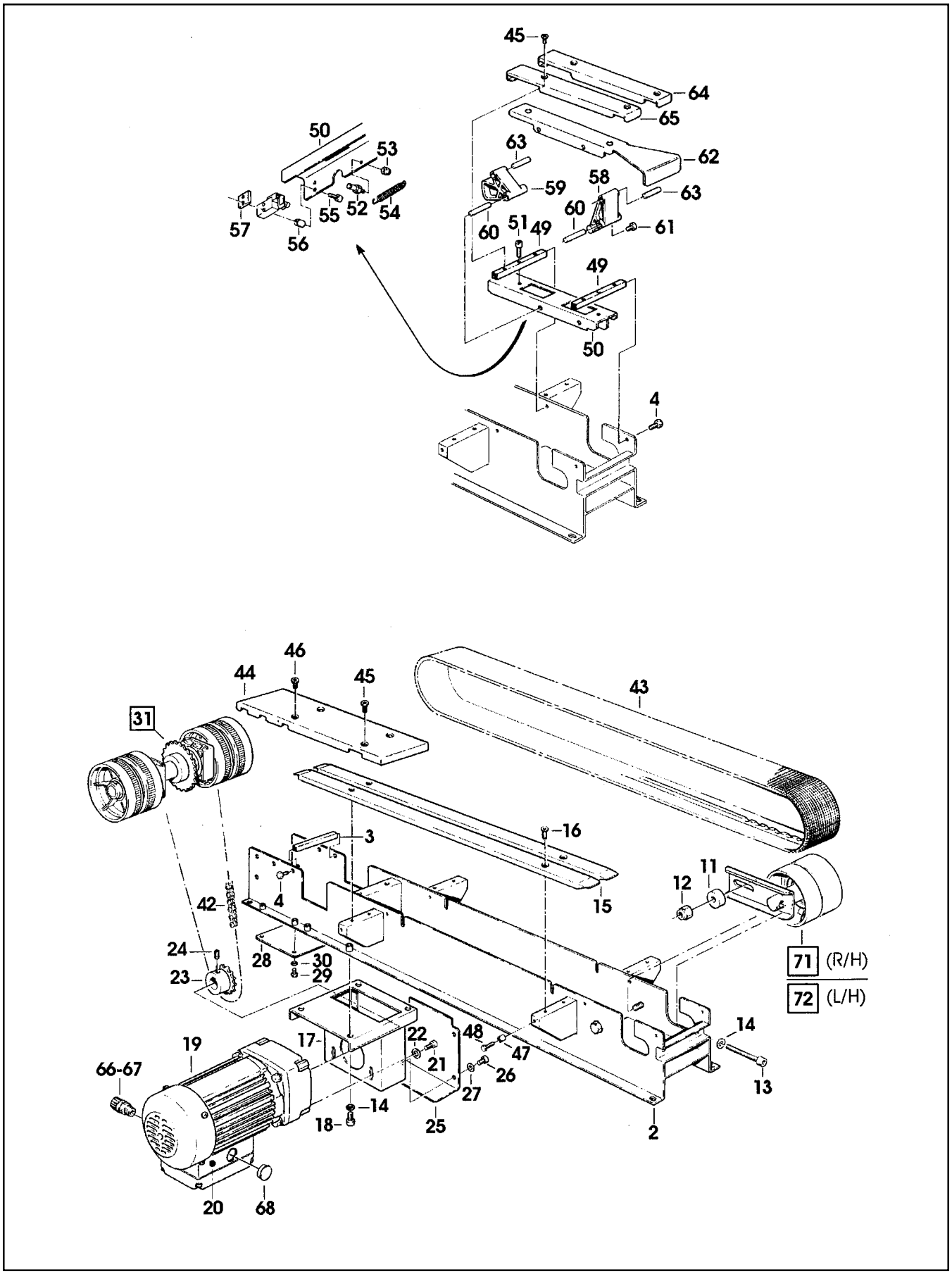

Figure 5916/1 of 2

Figure 5916 (Page 1 of 2)

Ref. No.	3M Part No.	Description
5916-1	78-8100-1150-8	Bottom Drive Assembly – W/O Motor
5916-2	78-8070-1580-1	Frame – Drive
5916-3	78-8070-1514-0	Spacer
5916-4	26-1003-5829-5	Screw – Hex Hd, M6 x 12
5916-7	78-8052-6710-7	Roller – Idler
5916-8	78-8052-6709-9	Washer – Special
5916-9	78-8010-7435-8	Washer – Lock, M6
5916-10	26-1003-7957-2	Screw – Soc Hd Hex Hd, M6 x 16
5916-11	78-8070-1518-1	Spacer – Shaft
5916-12	26-1003-6918-5	Nut – Plastic Insert, Hex Flange, M10
5916-13	78-8070-1519-9	Screw – Soc Hd Hex Hd, M8 x 70
5916-14	78-8017-9318-9	Washer – Plain, 8 mm
5916-15	78-8070-1520-7	Guide – Drive Belt
5916-16	26-1005-4757-4	Screw – Flat Hd, Soc Dr, M5 x 20
5916-17	78-8070-1521-5	Support – Gearbox
5916-18	26-1003-7964-8	Screw – Soc Hd, Hex Soc Dr, M8 x 20
5916-19	78-8070-1522-3	Gearmotor – 115V, 60HZ
5916-20	26-1011-8828-7	Capacitor – 115V Gearmotor
5916-21	78-8070-1523-1	Screw – 1/4 - 28 X 1/2 SHCS
5915-22	78-8042-2919-9	Washer – Triple, M6
5916-23	78-8070-1524-9	Sprocket – 3/8 Z=17
5916-24	78-8023-2479-4	Screw – Set W/End Cup, M6 x 10
5916-25	78-8070-1526-4	Cover – Chain
5916-26	78-8010-7209-7	Screw – Soc Hd, M6 x 12
5916-27	26-1000-0010-3	Washer – Flat, M6
5916-28	78-8076-4562-3	Cover – Bottom
5916-29	26-1003-5820-4	Screw – Hex Hd, M5 x 12
5916-30	78-8005-5741-1	Washer – Flat, M5
5916-31	78-8070-1527-2	Shaft With Drive Pulleys
5916-32	78-8070-1528-0	Shaft – Gearbox
5916-33	78-8057-5811-3	Key – 6 x 6 x 20 mm
5916-34	78-8054-8986-7	Sprocket – 3/8 Pitch, 28 Teeth
5916-35	78-8054-8984-2	Bushing
5916-36	78-8070-1529-8	Support – Shaft
5916-37	78-8070-1530-6	Bearing – 6205-2RS
5916-38	78-8057-5739-6	Key – M5 x 5 x 30 mm
5916-39	78-8076-5105-0	Pulley Assembly Drive

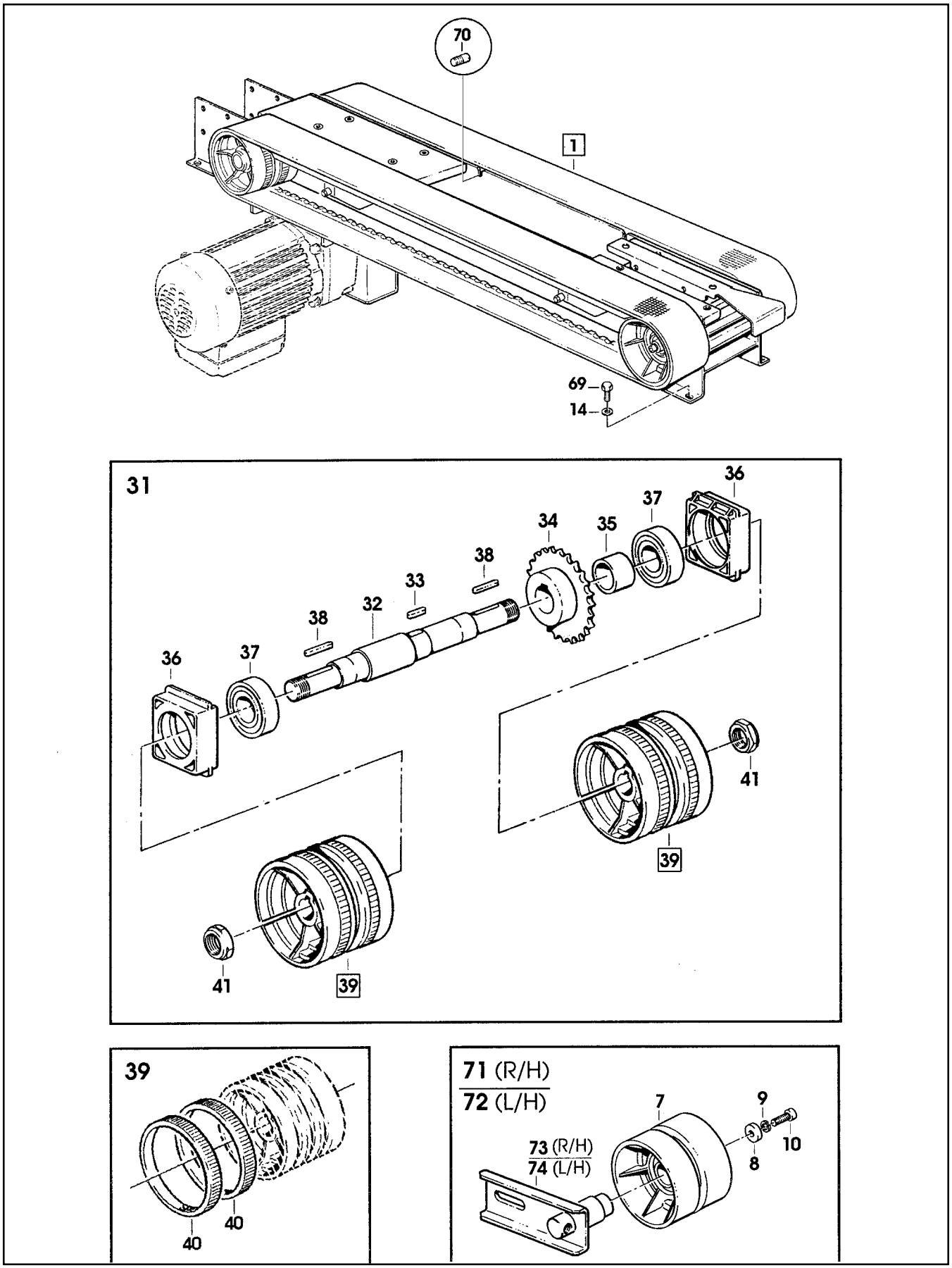

Figure 5916/2 of 2

Figure 5916 (Page 2 of 2)

Ref. No.	3M Part No.	Description
5916-40	78-8052-6713-1	Ring – Polyurethane
5916-41	78-8060-8416-2	Nut – Special, M20 x 1
5916-42	78-8070-1525-6	Chain – 3/8 Inch P=54
5916-43	78-8070-1531-4	Belt – Drive With Hook
5916-44	78-8070-1585-0	Cover – Drive, Rear
5916-45	26-0001-5862-1	Screw – Flat Hd Soc, M5 x 12
5916-46	26-1005-5316-8	Screw – Flat Hd Hex Dr, M5 x 16
5916-47	78-8070-1534-8	Stud – Side Plate
5916-48	78-8060-8488-1	Screw – Hex Hd, M5 x 20
5916-49	78-8076-4555-7	Spacer
5916-50	78-8076-4556-5	Support – Valve
5916-51	26-1003-7951-5	Screw – Soc Hd Hex Soc, M5 x 20
5916-52	78-8054-8757-2	Pin – Spring Holder
5916-53	26-1005-6859-6	Nut – Self Locking, M5
5916-54	78-8076-4774-4	Spring
5916-55	26-1003-7947-3	Screw – Soc Hd Hex Soc, M4 x 35
5916-56	78-8054-8758-0	Spacer – Valve Holder
5916-57	78-8059-5607-1	Plate – Threaded
5916-58	78-8076-4557-3	Lever – Front
5916-59	78-8076-4558-1	Cam – Valve
5916-60	78-8054-8756-4	Shaft – 6 x 46 mm
5916-61	26-1002-4955-1	Screw – Self Tapping, 8P x 13
5916-62	78-8100-1151-6	Actuator – Side Guide
5916-63	78-8054-8752-3	Shaft – 6 x 33 mm
5916-64	78-8076-4560-7	Cover – Right
5916-65	78-8113-6891-5	Cover – Left, W/English Language Label
5916-66	78-8076-4715-7	Cord Grip
5916-67	78-8076-5211-6	Set Nut – GMP 13,5
5916-68	78-8060-7885-9	End Cap – /25x1,2
5916-69	26-1003-5841-0	Screw – M8 x 16
5916-70	78-8076-4500-3	Stud – Mounting
5916-71	78-8100-1236-5	Belt Tensioning Assembly – R/H
5916-72	78-8100-1237-3	Belt Tensioning Assembly – L/H
5916-73	78-8100-1238-1	Belt Tensioning – R/H
5916-74	78-8100-1239-9	Belt Tensioning – L/H

700r Random Case Sealer

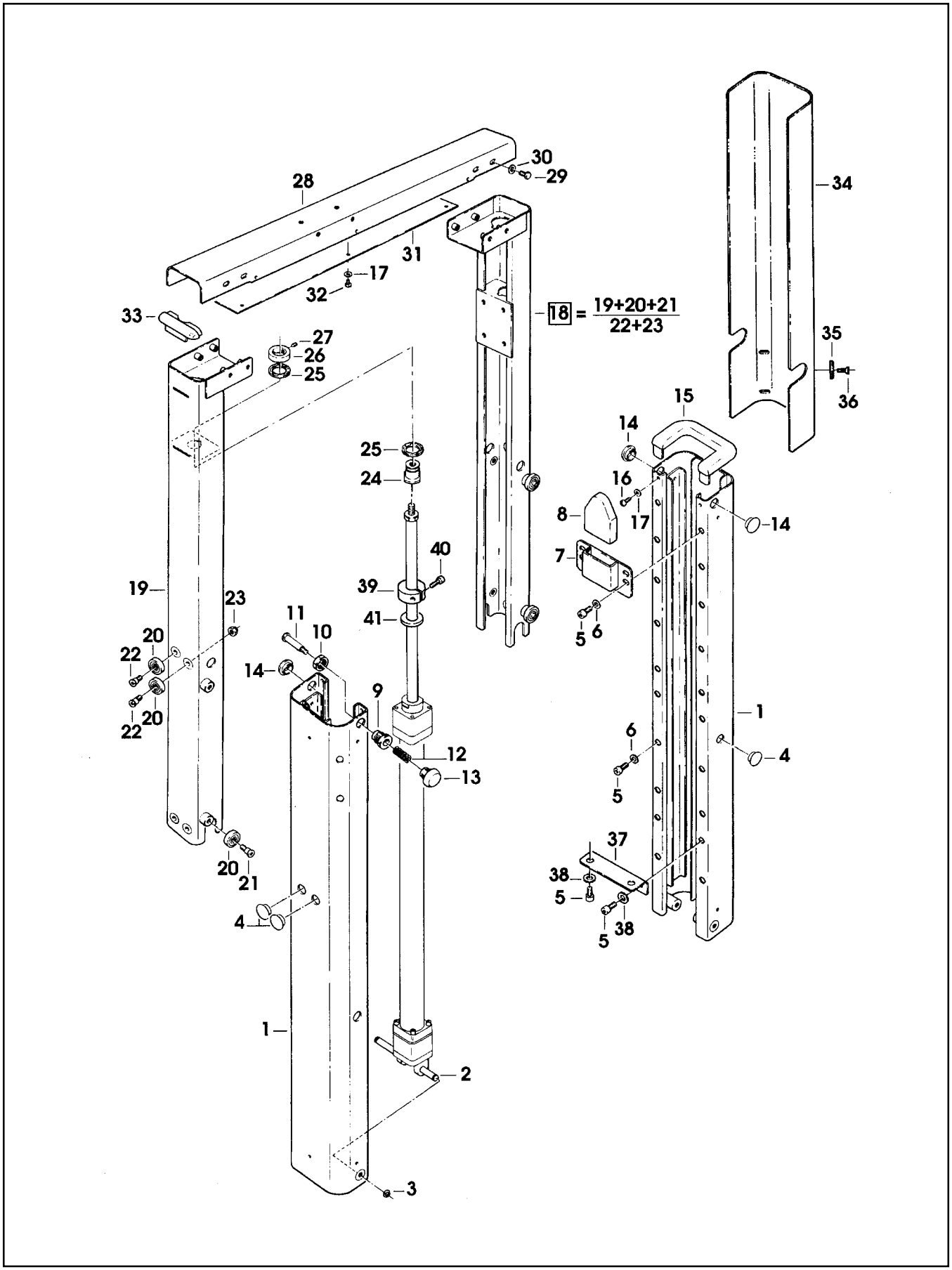

Figure 5917

Figure 5917

Ref. No.	3M Part No.	Description
5917-1	78-8076-4539-1	Column – Outer
5917-2	78-8076-4540-9	Pin – Air Cylinder
5917-3	78-8060-8035-0	E-Ring – 7DIN6799
5917-4	78-8054-8821-6	End – Cap
5917-5	26-1003-7964-8	Screw – Soc Hd Hex Soc Dr, M8 x 20
5917-6	78-8017-9318-9	Washer – Plai,n 8 mm
5917-7	78-8076-4541-7	Plate – Bumper Support
5917-8	78-8076-4542-5	Bumper
5917-9	78-8076-4543-3	Bushing – Height Stop
5917-10	78-8017-9169-6	Nut – M18 x 1
5917-11	78-8076-4544-1	Stud – Height Stop
5917-12	78-8076-4545-8	Spring
5917-13	78-8100-0954-4	Knob
5917-14	78-8076-4547-4	Cap – /18
5917-15	78-8060-8491-5	Cap – Column
5917-16	78-8076-4548-2	Screw – Self Tapping, 8P x 16
5917-17	78-8005-5740-3	Washer – Plain 4 mm
5917-18	78-8076-4549-0	Column Assembly – Inner
5917-19	78-8076-4550-8	Column – Inner
5917-20	78-8054-8617-8	Bearing – Special
5917-21	78-8017-9106-8	Screw – Bearing Shoulder
5917-22	78-8054-8589-9	Screw – Special
5917-23	26-1003-6916-9	Nut – Locking Plastic Insert, M6
5917-24	78-8076-4551-6	Mounting – Rod
5917-25	78-8054-8823-2	Washer – Bumper
5917-26	78-8076-4552-4	Ring Nut – Rod
5917-27	78-8059-5617-0	Set Screw – M6 x 8
5917-28	78-8076-4553-2	Crossmember
5917-29	78-8060-7886-7	Screw – Hex Hd, M6 x 16 Special
5917-30	26-1000-0010-3	Washer – Flat, M6
5917-31	78-8070-1504-1	Cover
5917-32	78-8010-7157-8	Screw – Hex Hd, M4 x 10
5917-33	78-8070-1505-8	Cap – Inner Column
5917-34	78-8113-6886-5	Guard – Column, W/English Language Label
5917-35	78-8076-5477-3	Washer – Special
5917-36	26-1001-9843-6	Screw – Flat Soc Hd, M6 x 16
5917-37	78-8060-8490-7	Plate – Column Mounting
5917-38	26-1004-5507-5	Washer – M8
5917-39	78-8100-1153-2	Collar – Height Locking
5917-40	78-8010-7210-5	Screw – Soc Hd Hex Soc, M6 x 20
5917-41	78-8100-1154-0	Washer – /30-15-05

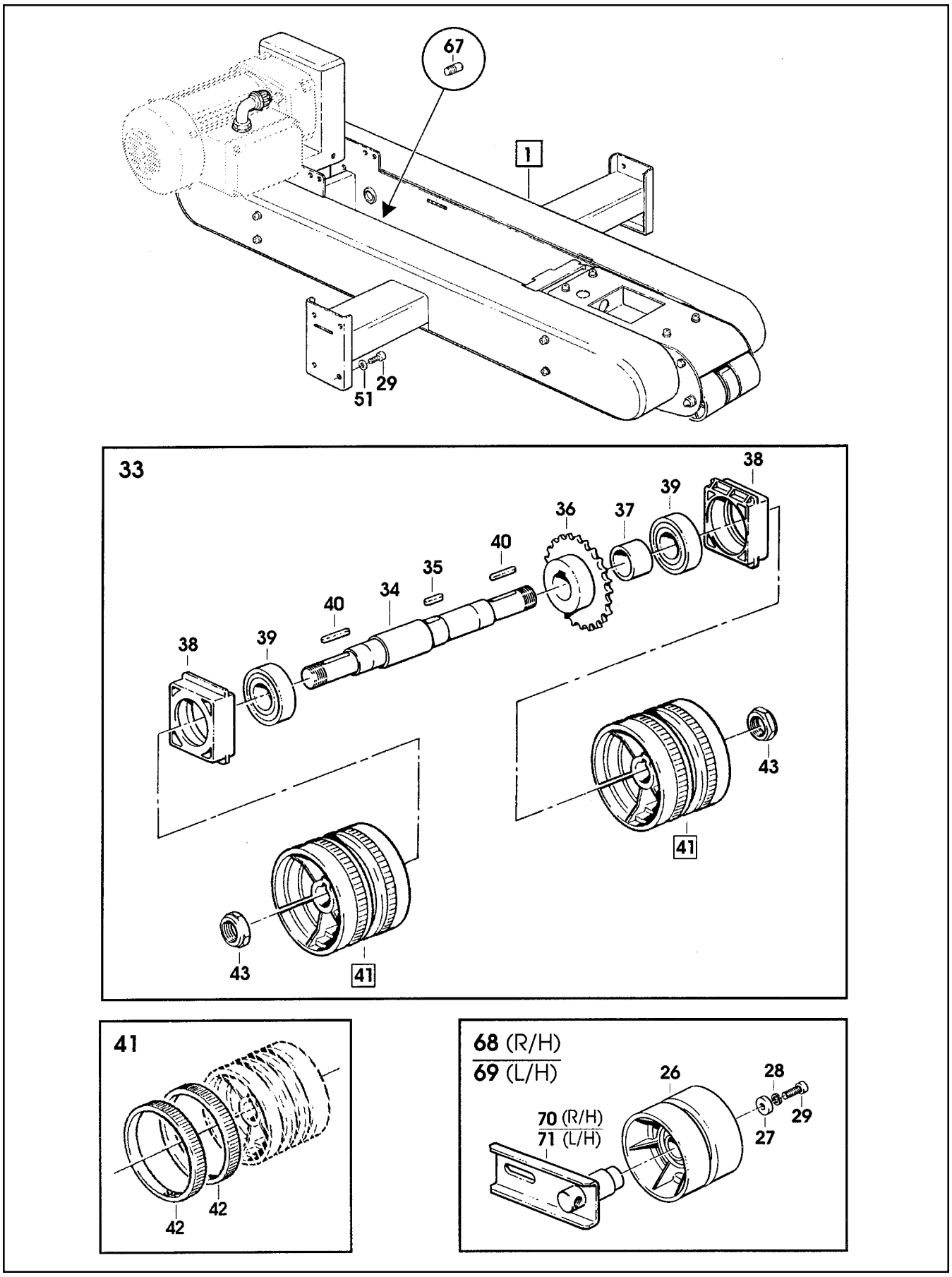

Figure 5918/1 of 2

Figure 5918 (Page 1 of 2)

Ref. No.	3M Part No.	Description
5918-1	78-8100-1155-7	Upper Drive Assembly – W /O Motor
5918-2	78-8070-1588-4	Frame – Drive, Upper
5918-3	78-8070-1520-7	Guide – Drive Belt
5918-4	26-1005-4757-4	Screw – Flat Hd, M5 x 20
5918-5	78-8070-1589-2	Clamp – Upper Head
5918-6	78-8070-1590-0	Shaft – Roller
5918-7	26-1003-7948-1	Screw – Soc Hd, M5 x 10
5918-8	78-8076-4655-5	Spacer – Valve
5918-9	78-8010-7169-3	Screw – Hex Hd, M6 x 12
5918-10	26-1000-0010-3	Washer – Flat, M6
5918-11	78-8100-1130-0	Tube – Roller
5918-12	78-8076-4656-3	Roller
5918-13	78-8076-4657-1	Link – Actuator, Valve
5918-14	78-8100-1131-8	Shaft – Roller
5918-15	78-8100-1132-6	Nut – Special, M8
5918-16	78-8017-9318-9	Washer – Plain, 8 mm
5918-17	78-8076-4658-9	Shaft
5918-18	78-8052-6566-3	Washer – Friction
5918-19	78-8016-5855-6	E-Ring – 100 mm
5918-20	78-8076-4659-7	Plate – Valve
5918-21	78-8010-7163-6	Screw – Hex Hd, M5 x 10
5918-22	26-1003-7946-5	Screw – Soc Hd, M4 x 25
5918-23	78-8059-5607-1	Plate – Threaded
5918-26	78-8052-6710-7	Roller – Idler
5918-27	78-8052-6709-9	Washer – Special
5918-28	78-8010-7435-8	Washer – Lock, M6
5918-29	26-1003-7957-2	Screw – Soc Hd, M6 x 16
5918-30	78-8070-1518-1	Spacer – Shaft
5918-31	26-1003-6918-5	Nut – Hex, Plastic Insert, M10
5918-32	78-8070-1594-2	Screw – Hex Hd, M8 x 60
5918-33	78-8070-1527-2	Shaft – With Drive Pulleys
5918-34	78-8070-1528-0	Shaft – Gearbox
5918-35	78-8057-5811-3	Key – 6 x 6 x 20 mm
5918-36	78-8054-8986-7	Sprocket – 3/8" Pitch 28 Teeth
5918-37	78-8054-8984-2	Bushing

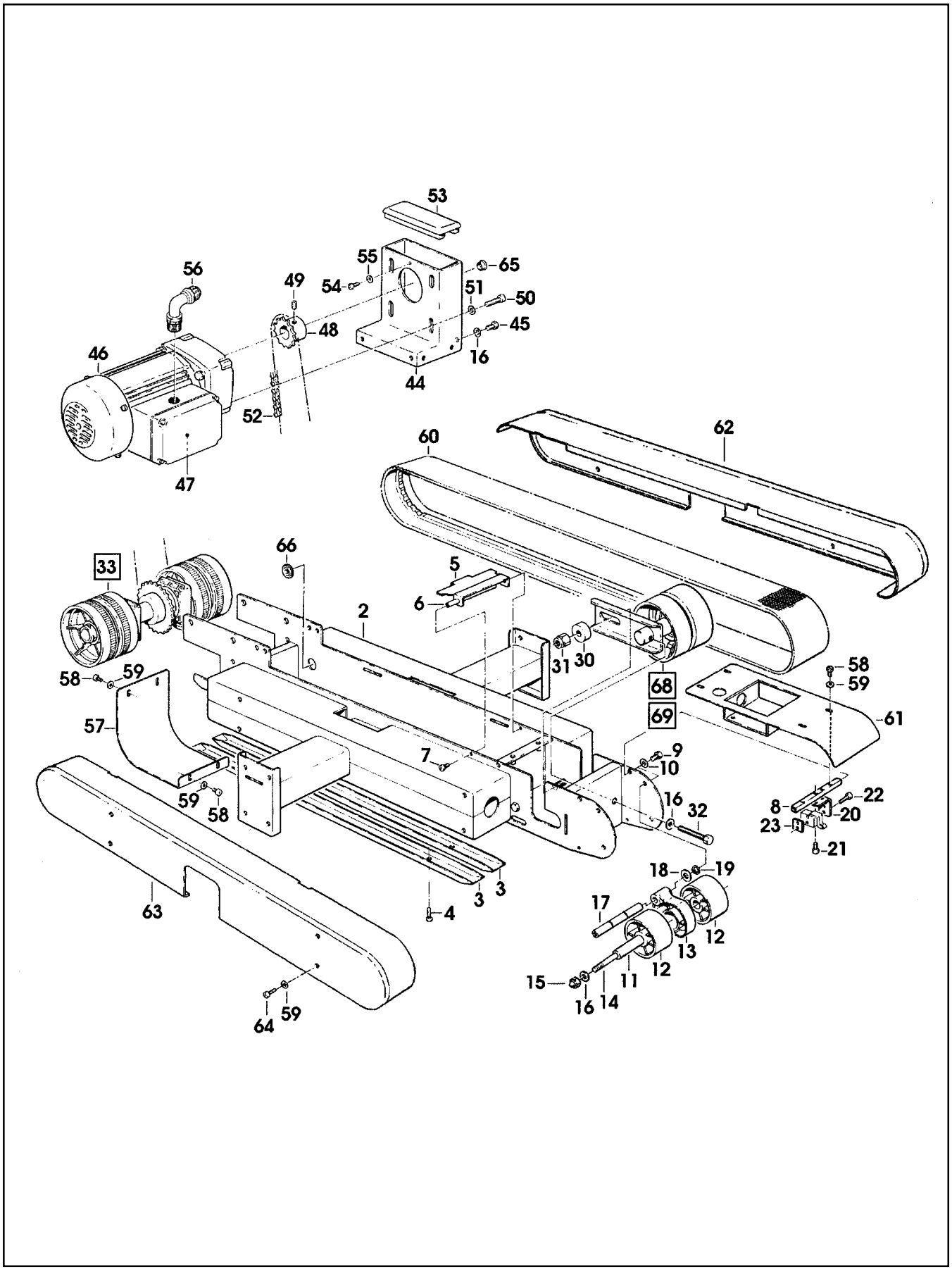

Figure 5918/2 of 2

Figure 5918 (Page 2 of 2)

Ref. No.	3M Part No.	Description
5918-38	78-8070-1529-8	Support – Shaft
5918-39	78-8070-1530-6	Bearing – 6205-2RS
5918-40	78-8057-5739-6	Key – M5 x 5 x 30 mm
5918-41	78-8076-5105-0	Pulley Assembly – Drive
5918-42	78-8052-6713-1	Ring – Polyurethane
5918-43	78-8060-8416-2	Nut – Special, M20 x 1
5918-44	78-8070-1595-9	Support – Drive
5918-45	26-1003-5842-8	Screw – Hex Hd, M8 x 20
5918-46	78-8070-1522-3	Gearmotor – 115V, 60HZ
5918-47	78-8076-4515-1	Capacitor – 115V Gearmotor
5918-48	78-8070-1524-9	Sprocket – 3/8" Z=17
5918-49	78-8023-2479-4	Set Screw – W/End Cup, M6 x 10
5918-50	78-8070-1523-1	Screw – 1/4-28 x 1/2 SHCS
5918-51	78-8100-1042-7	Washer – /15 x 6.35 x 2
5918-52	78-8070-1597-5	Chain – 3/8" P=62
5918-53	78-8070-1598-3	Cover
5918-54	26-1002-4955-1	Screw – Self Tap 8P x 13
5918-55	78-8005-5740-3	Washer – Plain, 4 mm
5918-56	78-8070-1596-7	Union – Elbow, PG 13,5
5918-57	78-8076-4622-5	Cover – Rear Upper
5918-58	78-8060-8087-1	Screw – M5 x 10
5918-59	78-8005-5741-1	Washer – Flat, M5
5918-60	78-8070-1531-4	Belt – Drive, W/Hook
5918-61	78-8113-6890-7	Cover – Upper, Front, W/English Language Label
5918-62	78-8113-6889-9	Guard – Belt, R/H, W/English Language Label
5918-63	78-8113-6888-1	Guard – Belt, L/H, W/English Language Label
5918-64	78-8076-4625-8	Screw – Special, M5 x 16
5918-65	78-8054-8821-6	End – Cap
5918-66	78-8076-4702-5	Grommet – /28
5918-67	78-8076-4500-3	Stud – Mounting
5918-68	78-8100-1236-5	Belt Tensioning Assembly – R/H
5918-69	78-8100-1237-3	Belt Tensioning Assembly – L/H
5918-70	78-8100-1238-1	Belt Tensioning – R/H
5918-71	78-8100-1239-9	Belt Tensioning – L/H

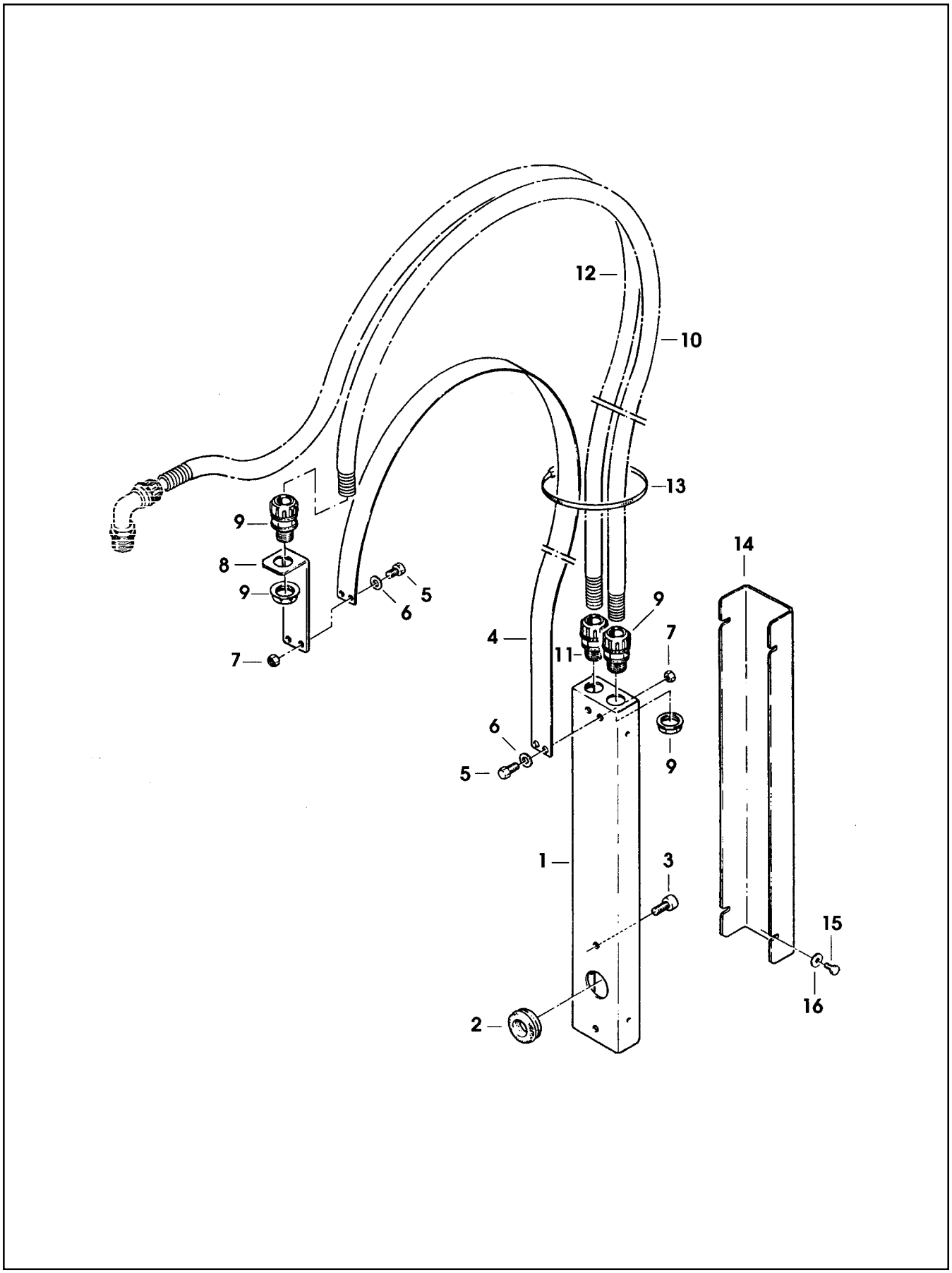

Figure 5919

Figure 5919

Ref. No.	3M Part No.	Description
5919-1	78-8091-0660-8	Housing – Wire
5919-2	78-8076-4702-5	Grommet – /28
5919-3	26-1003-7963-0	Screw – Soc Hd, M8 x 16
5919-4	78-8076-4636-5	Strap – Wire
5919-5	78-8010-7163-6	Screw – Hex Hd, M5 x 10
5919-6	78-8005-5741-1	Washer – Plain, M5
5919-7	78-8010-7417-6	Nut – Hex, M5
5919-8	78-8100-1135-9	Bracket – Strap
5919-9	78-8076-4520-1	Union – PG13, Sleeve /16
5919-10	78-8076-4521-9	Sleeving – Wire, 900 mm /16
5919-11	78-8076-4638-1	Union – PG13.5, Sleeve /14
5919-12	78-8076-4640-7	Sleeving – Wire, 1100 mm /14
5919-13	78-8060-8029-3	Clamp – 140 x 3,5
5919-14	78-8076-4641-5	Cover
5919-15	78-8010-7157-8	Screw – Hex Hd, M4 x 10
5919-16	78-8017-9018-5	Washer – Plain, M4 Special

700r Random Case Sealer

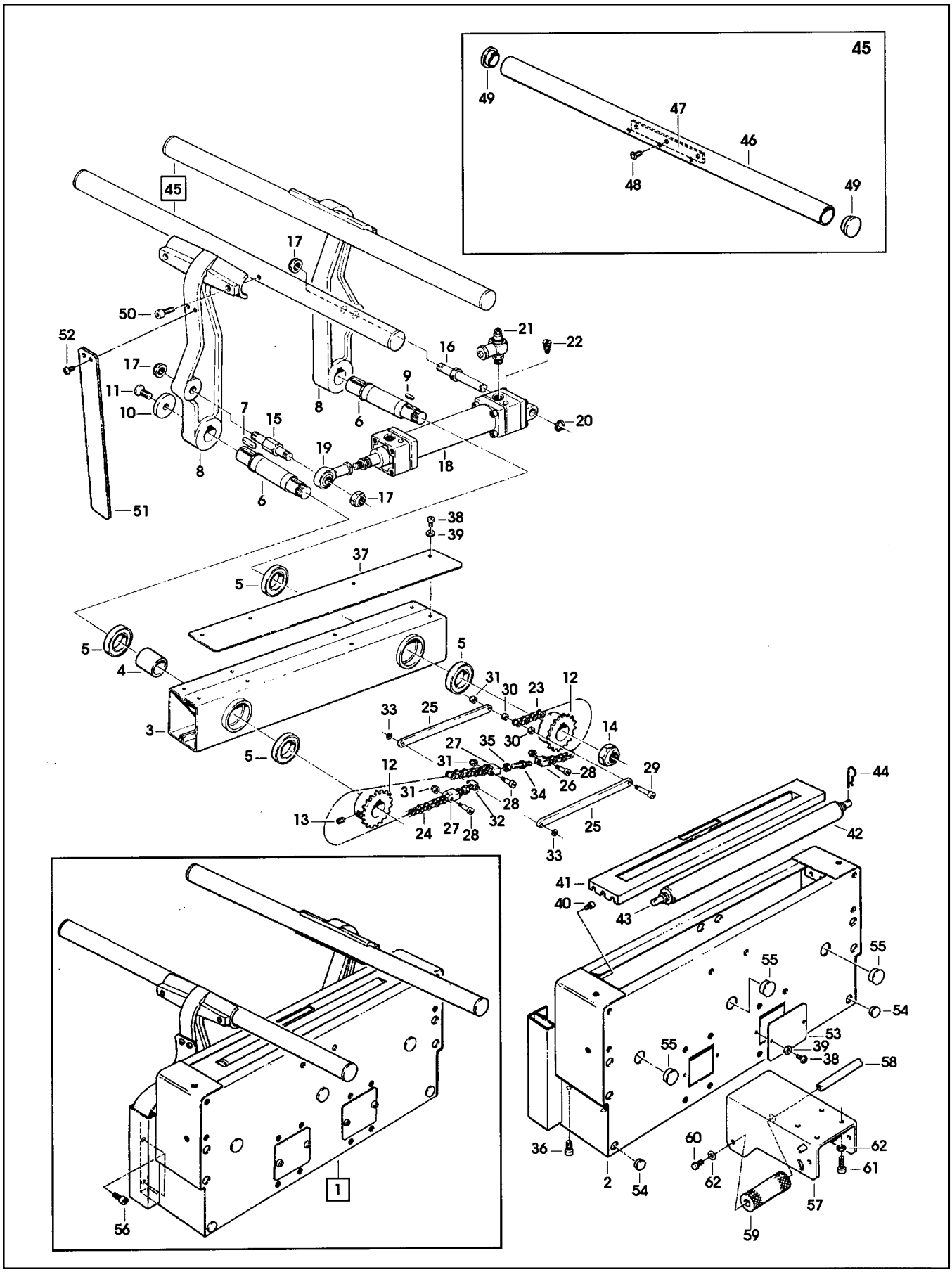

Figure 5920

Figure 5920

Ref. No.	3M Part No.	Description
5920-1	78-8100-1156-5	Infeed Conveyor Assembly
5920-2	78-8100-1157-3	Frame – Infeed
5920-3	78-8076-4566-4	Frame
5920-4	78-8076-4518-5	Spacer – Bearing
5920-5	78-8023-2551-0	Bearing – 6005-2RS
5920-6	78-8076-4567-2	Pivot – Infeed
5920-7	78-8076-4568-0	Key – 7 x 8 x 25
5920-8	78-8100-1158-1	Lever – Infeed
5920-9	78-8076-4570-6	Key – 6 x 6 x 15
5920-10	78-8054-8588-1	Washer – 8,5/40 x 6
5920-11	78-8054-8567-5	Screw – Soc Hd, Special
5920-12	78-8076-4571-4	Sprocket – Z = 20
5920-13	78-8023-2479-4	Screw – Set W/End Cup, M6 x 10
5920-14	78-8060-8416-2	Nut – Special, M20 x 1
5920-15	78-8076-4572-2	Stud – Joint
5920-16	78-8076-4573-0	Pin – Air Cylinder
5920-17	78-8091-0555-0	Nut – Special, M12
5920-18	78-8076-4575-5	Cylinder – Air, /40 x 155
5920-19	78-8057-5747-9	Mount – Cylinder Rod End
5920-20	78-8656-3965-8	External Retaining Ring – M8
5920-21	78-8091-0510-5	Regulator– Speed
5920-22	78-8076-4653-0	Screw – Cushioning Cyl./40
5920-23	78-8076-4576-3	Chain – 3/8 P=25
5920-24	78-8076-4577-1	Chain – 3/8 P=45
5920-25	78-8054-8787-9	Link – Chain
5920-26	78-8054-8788-7	Connector – Chain
5920-27	78-8054-8786-1	Connector – Chain
5920-28	78-8060-7520-2	Screw – M3 x 20
5920-29	78-8060-7519-4	Screw – M3 x 25
5920-30	78-8054-8783-8	Washer – Special
5920-31	78-8059-5517-2	Nut – Self Locking, M3
5920-32	78-8054-8784-6	Block – Chain
5920-33	78-8656-3945-0	E-Ring – M4
5920-34	78-8054-8785-3	Rod – Threaded Right/Left
5920-35	78-8010-7418-4	Nut – Hex, M6
5920-36	26-1003-7963-0	Screw – Soc Hd, M8 x 16
5920-37	78-8076-4578-9	Cover – Chain
5920-38	26-1002-5753-9	Screw – Self Tapping
5920-39	78-8005-5740-3	Washer – Plain, 4 mm
5920-40	26-1003-7943-2	Screw – Soc Hd, M4 x 12
5920-41	78-8100-1159-9	Cover
5920-42	78-8100-1160-7	Roller – /32 x 438, W/O Shaft
5920-43	78-8100-1161-5	Shaft – Roller
5920-44	78-8076-5385-8	Spring
5920-45	78-8076-4648-0	Guide Assembly
5920-46	78-8076-4649-8	Guide – Infeed
5920-47	78-8076-4650-6	Plate – Guide
5920-48	26-1002-5830-5	Screw – Soc Hd, M6 x 12
5920-49	78-8054-8779-6	End – Cap
5920-50	78-8010-7210-5	Screw – Soc Hd Hex Soc, M6 x 20
5920-51	78-8100-1162-3	Strap – Safety
5920-52	78-8094-6145-8	Screw – Phillis, M5 x 12
5920-53	78-8076-4651-4	Plate – Infeed
5920-54	78-8054-8821-6	End – Cap
5920-55	78-8060-7885-9	End – Cap, /25 x 1,2
5920-56	26-1003-7964-8	Screw – Soc Hd Hex Soc Dr, M8 x 20
5920-57	78-8076-4652-2	Support – Bracket
5920-58	78-8060-8484-0	Shaft – Roller
5920-59	78-8060-8485-7	Roller
5920-60	78-8032-0375-7	Screw – Hex Hd, M6 x 16
5920-61	26-1003-7957-2	Screw – Soc Hd Hex Hd, M6 x 16
5920-62	26-1000-0010-3	Washer – Flat, M6
5920	78-8060-8435-2	Repair Kit – Cylinder/40

700r Random Case Sealer

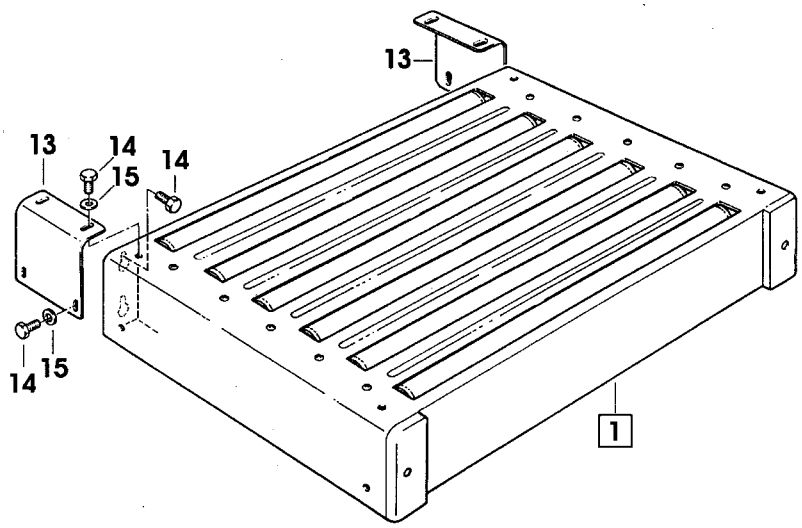

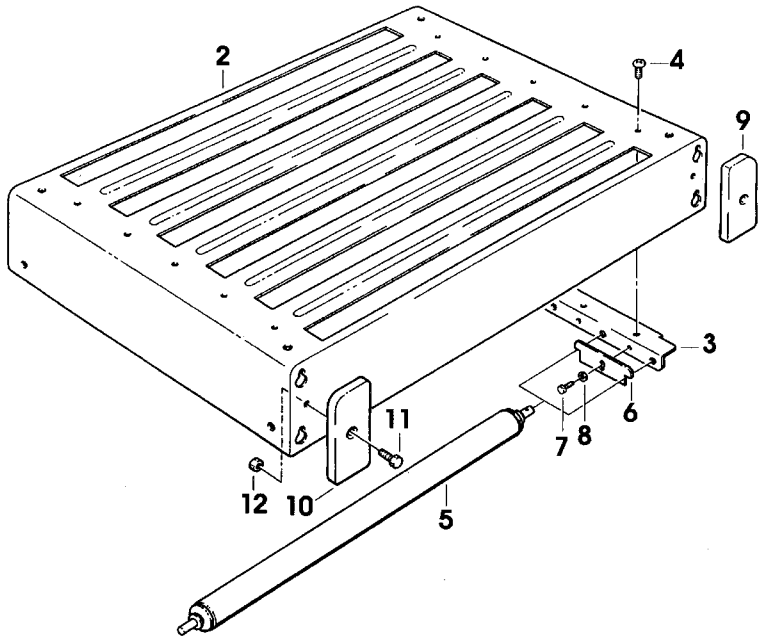

Figure 5921

Figure 5921

Ref. No.	3M Part No.	Description
5921-1	78-8100-1163-1	Conveyor Assembly – Infeed
5921-2	78-8076-4513-6	Plate – Reinforcement
5921-3	78-8100-1164-9	Plate
5921-4	78-8076-4625-8	Screw – Special, M5 x 16
5921-5	78-8076-4579-7	Roller – /32 x 492
5921-6	78-8100-1166-4	Plate – Roller
5921-7	78-8010-7157-8	Screw – Hex Hd, M4 x 10
5921-8	78-8005-5740-3	Washer – Plain, 4 mm
5921-9	78-8076-4511-0	Cap – Front, R/H
5921-10	78-8076-4512-8	Cap – Front, L/H
5921-11	78-8032-0375-7	Screw – Hex Hd, M6 x 16
5921-12	78-8010-7418-4	Nut – Hex, M6
5921-13	78-8076-4514-4	Bracket – Infeed Conveyor
5921-14	26-1003-5841-0	Screw – M8 x 16
5921-15	78-8017-9318-9	Washer – Plain, 8 mm

700r Random Case Sealer

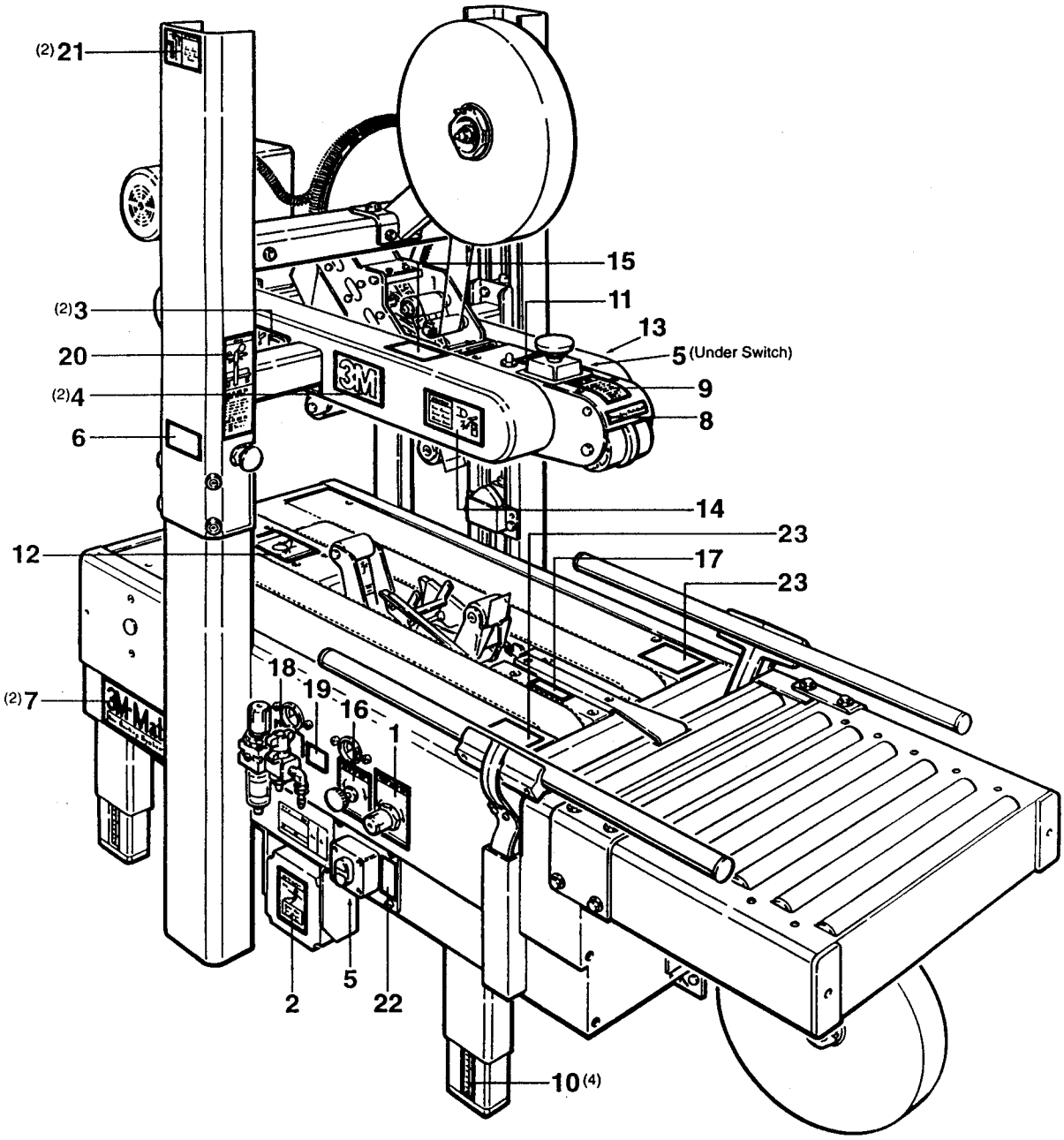

Safety and Information Labels

Safety and Information Labels

A label kit, part number 78-8098-9177-9, is available as a stock item. It contains all the safety and information labels used on the case sealer, or labels can be ordered separately from the following list.

Ref. No.	3M Part No.	Description	Qty.
1	78-8070-1317-8	Label – Centering Guide	1
2	78-8070-1329-3	Label – Warning, Hazardous Voltage	1
3	78-8070-1336-8	Label – Warning, Sharp Knife	2
4	78-8070-1339-2	Information – 3M Logo	2
5	78-8069-3852-6	Label – Ground Symbol	2
6	78-8068-3859-1	Label – Service and Spares	1
7	78-8062-4266-1	Label – Product	2
8	78-8070-1319-4	Label – Drive Assembly Raising Switch	1
9	78-8070-1332-7	Label – Safety Instructions	1
10	78-8060-8481-6	Label – Leg	4
11	78-8095-1141-9	Label – Stop	1
12	78-8113-6717-2	Label – Caution, Pinch Point	1
13	78-8113-6768-5	Label – Caution, Moving Belts, R/H	1
14	78-8113-6769-3	Label – Caution, Moving Belts, L/H	1
15	78-8113-6770-1	Label – Notice, Taping Head Latch	1
16	78-8070-1333-5	Label – Top Drive Assembly	1
17	78-8070-1360-8	Label – Box Centering Switch	1
18	78-8113-6750-3	Label – Air Supply	1
19	78-8111-1496-2	Label – Air Pressure	1
20	78-8070-1328-5	Label – Notice, Mechanical Latch	1
21	78-8070-1421-8	Label – Caution, Hands Pinch Point	2
22	78-8113-6775-0	Label – Electrical On/Off	1
23	78-8098-8908-8	Label – Warning, Moving Bars	2