Instructions and Parts List

AccuGlide™ 2+

STD 2 Inch Upper and Lower Taping Heads

Type 10500

Important Safety Information

BEFORE INSTALLING OR OPERATING THIS EQUIPMENT
Read, understand, and follow all safety and operating instructions.

Spare Parts

It is recommended you immediately order the spare parts listed in the "Spare Parts/Service Information" section. These parts are expected to wear through normal use, and should be kept on hand to minimize production delays.

Serial No._____

For reference, record taping head(s) serial number(s) here.

3M Industrial Adhesives and Tapes
3M Center, Building 220-5E-06
St. Paul, MN 55144-1000

AccuGlide™ is a Trademark of 3M, St. Paul, MN 55144-1000

Litho in U.S.A

© 3M 2005 44-0009-2036-1(A)

To Our Customers:

This is the 3M-Matic™/AccuGlide™/Scotch® equipment you ordered. It has been set up and tested in the factory with Scotch® tapes. If technical assistance or replacement parts are needed, call or fax the appropriate number listed below.

Included with each machine is an Instructions and Parts List manual.

Technical Assistance:

3M-Matic™ Helpline – 1-800/328 1390. Please provide the customer support coordinator with the machine number, machine type/model and serial number. If you have a technical question that does not require an immediate response, you may Fax it to 651-736-7282.

Replacement Parts and Additional Manuals

Order parts by part number, part description and quantity required. Also, when ordering parts and/or additional manuals, include machine name, number and type. A parts order form is provided at the back of this manual.

3M/Tape Dispenser Parts
241 Venture Drive **1-800/344 9883**
Amery, WI 54001-1325 **FAX# 715/268 8153**

Minimum billing on parts orders will be $25.00. Replacement part prices available on request.
$10.00 restocking charge per invoice on returned parts.
Note : Outside the U.S., contact the local 3M subsidiary for parts ordering information.

3M

3M Industrial Adhesives and Tapes
3M Center, Building 220-5E-06
St. Paul, MN 55144-1000

"3M-Matic", "AccuGlide" and "Scotch" are trademarks of 3M, St. Paul, Minnesota 55144-1000

Printed in U.S.A.

© 3M 2005 44-0009-1851-4(F)

To Our Customers:

This is the 3M-Matic™/AccuGlide™/Scotch® equipment you ordered. It has been set up and tested in the factory with Scotch® tapes. If any problems occur when operating this equipment and you desire a service call or phone consultation, call, write or fax the appropriate number listed below.

Included with each machine is an Instructions and Parts List manual.

SERVICE, REPLACEMENT PARTS AND ADDITIONAL MANUALS AVAILABLE DIRECT FROM:

Order parts by part number, part description and quantity required. Also, when ordering parts and/or additional manuals, include machine name, number and type.

3M

3M Industrial Adhesives and Tapes
3M Center, Building 220-5E-06
St. Paul, MN 55144-1000

"3M-Matic", "AccuGlide" and "Scotch" are trademarks of 3M, St. Paul, Minnesota 55144-1000

Printed in U.S.A.

© 3M 2005 44-0009-1852-2(E)

Instruction Manual

AccuGlide™ 2+ STD 2 Inch
Upper and Lower Taping Heads
Type 10500

Table of Contents — Page

Equipment Warranty and Limited Remedy ii

Taping Head Contents ii

Intended Use 1

Important Safeguards 2

Specifications ..... 4 - 5
- Dimensional Drawing 5

Installation 6
- Receiving and Handling 6
- Installation Guidelines 6
- Tape Leg Length 6
- Tape Width Adjustment 6

Operation ..... 7 - 9
- Tape Loading – Upper Taping Head 8
- Tape Loading – Lower Taping Head ..... 8 - 9

Maintenance ..... 10 - 11
- Blade Replacement 10
- Blade Guard 10
- Blade Oiler Pad 10
- Cleaning 11
- Applying/Buffing Roller Replacement 11

Adjustments ..... 12 - 14
- Tape Latch Alignment 12
- Tape Drum Friction Brake 12
- Applying Mechanism Spring 13
- One-Way Tension Roller 13
- Tape Leg Length 14
  - Leading Tape Leg Length Adjustment 14
  - Changing Tape Leg Length From 70 to 50 mm [2-3/4 to 2 Inch] 14

Troubleshooting ..... 15 - 16
- Troubleshooting Guide ..... 15 - 16

Spare Parts/Service Information 17
- Recommended Spare Parts 17
- Replacement Parts and Service 17

Replacement Parts Illustrations and Parts List ..... Yellow Section 18 - 35

Equipment Warranty and Limited Remedy: THE FOLLOWING WARRANTY IS MADE IN LIEU OF ALL OTHER WARRANTIES, EXPRESS OR IMPLIED, INCLUDING, BUT NOT LIMITED TO, ANY IMPLIED WARRANTY OF MERCHANTABILITY OR FITNESS FOR A PARTICULAR PURPOSE AND ANY IMPLIED WARRANTY ARISING OUT OF A COURSE OF DEALING, CUSTOM OR USAGE OF TRADE:

3M sells its **AccuGlide™ 2+ STD 2 Inch Upper and Lower Taping Heads, Type 10500** with the following warranty:

1. The Taping Head blade, springs and rollers will be free from defects in material and manufacture for ninety (90) days after delivery.
2. All other Taping Head parts will be free from defects in material and manufacture for three (3) years after delivery.

If any part is defective within this warranty period, your exclusive remedy and 3M's and seller's sole obligation shall be, at 3M's option, to repair or replace the part. 3M must receive actual notice of any alleged defect within a reasonable time after it is discovered, but in no event shall 3M have any obligation under this warranty unless it receives such notice within five (5) business days after the expiration of the warranty period. All notices required hereunder shall be given to 3M solely through the 3M-Matic™ Helpline (800-328-1390). To be entitled to repair or replacement as provided under this warranty, the part must be returned as directed by 3M to its factory or other authorized service station designated by 3M. If 3M is unable to repair or replace the part within a reasonable time after receipt thereof, 3M, at its option, will replace the equipment or refund the purchase price. 3M shall have no obligation to provide or pay for the labor required to remove any part or equipment or to install the repaired or replacement part or equipment. 3M shall have no obligation to repair or replace those parts failing due to normal wear, inadequate or improper maintenance, inadequate cleaning, non-lubrication, improper operating environment, improper utilities, operator error or misuse, alteration or modification, mishandling, lack of reasonable care, or due to any accidental cause.

Limitation of Liability: Except where prohibited by law, 3M and seller will not be liable for any loss or damage arising from this 3M equipment, whether direct, indirect, special, incidental, or consequential, regardless of the legal theory asserted, including breach of warranty, breach of contract, negligence, or strict liability.

Note: The foregoing Equipment Warranty and Limited Remedy and Limitation of Liability may be changed only by a written agreement signed by authorized representatives of 3M and seller.

Taping Head Contents

AccuGlide™ 2+ Stainless Steel 2 Inch Upper and Lower Taping Heads consist of:

Qty.	Part Name
1	Taping Head Assembly
1	Tape Drum and Bracket Assembly
1	Hardware and Spare Parts Kit
1	Threading Tool

AccuGlide™, Scotch™, and 3M-Matic™ are Trademarks of 3M, St. Paul, Minnesota 55144-1000

Intended Use

The intended use of the **AccuGlide™ 2+ STD 2 Inch Upper and Lower Taping Heads** is to apply a "C" clip of Scotch® pressure-sensitive film box sealing tape to the top and/or bottom center seam of regular slotted containers.

These taping heads are incorporated into most standard **3M-Matic™** case sealers. The compact size and simplicity of the taping head also makes it suitable for mounting in box conveying systems other than **3M-Matic™** case sealers. This includes replacement of other types of taping, gluing or stapling heads in existing case sealing machines. The **AccuGlide™ 2+ STD Taping Heads** have been designed and tested for use with Scotch® pressure-sensitive film box sealing tape.

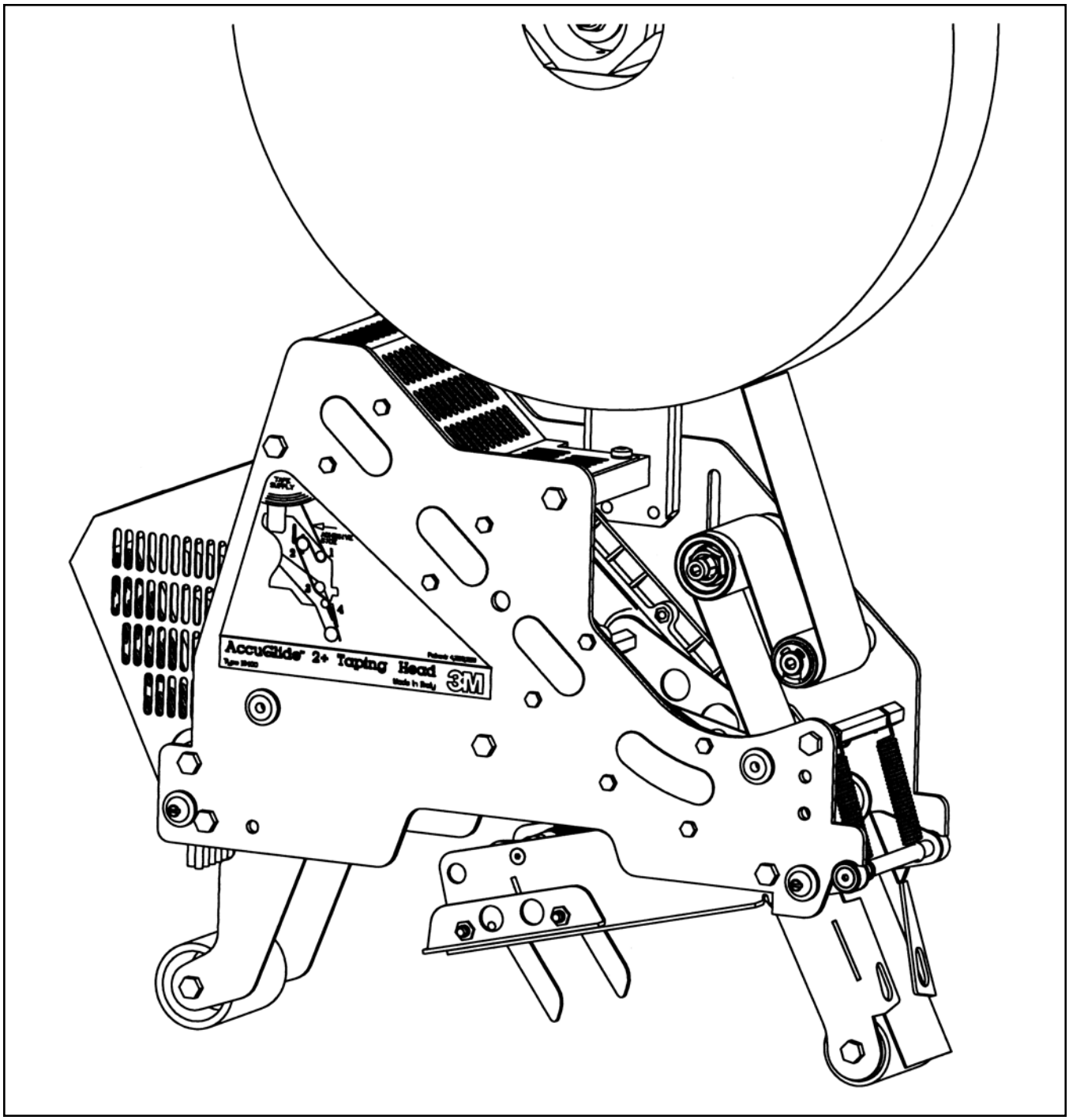

AccuGlide™ 2+ STD 2 Inch Upper Taping Head, Type 10500

This safety alert symbol identifies important safety messages in this manual. READ AND UNDERSTAND THEM BEFORE INSTALLING OR OPERATING THIS EQUIPMENT.

Explanation of Signal Word Consequences

WARNING: Indicates a potentially hazardous situation, which, if not avoided, could result in death or serious injury and/or property damage.

CAUTION: Indicates a potentially hazardous situation, which, if not avoided, may result in minor or moderate injury and/or property damage.

WARNING

- **To reduce the risk associated with mechanical hazards:**
  - Read, understand and follow all safety and operating instructions before operating or servicing the case sealer
  - Allow only properly trained and qualified personnel to operate and/or service this equipment
- **To reduce the risk associated with shear, pinch, and entanglement hazards:**
  - Turn air and electrical supplies off on associated equipment before performing any adjustments, maintenance, or servicing the taping heads
  - Never attempt to work on the taping head or load tape while the box drive system is running
- **To reduce the risk associated with sharp blade hazards:**
  - Keep hands and fingers away from tape cutoff blades under orange blade guards. The blades are extremely sharp

CAUTION

- **To reduce the risk associated with muscle strain:**
  - Use proper body mechanics when removing or installing taping heads that are moderately heavy or may be considered awkward to lift
- **To reduce the risk associated with impact hazards:**
  - Place the taping head on a smooth level surface when maintaining or servicing this equipment

Important – In the event the following safety labels are damaged or destroyed, **they must be replaced to ensure operator safety**. See "Replacement Parts Illustrations and Parts Lists" for label part numbers.

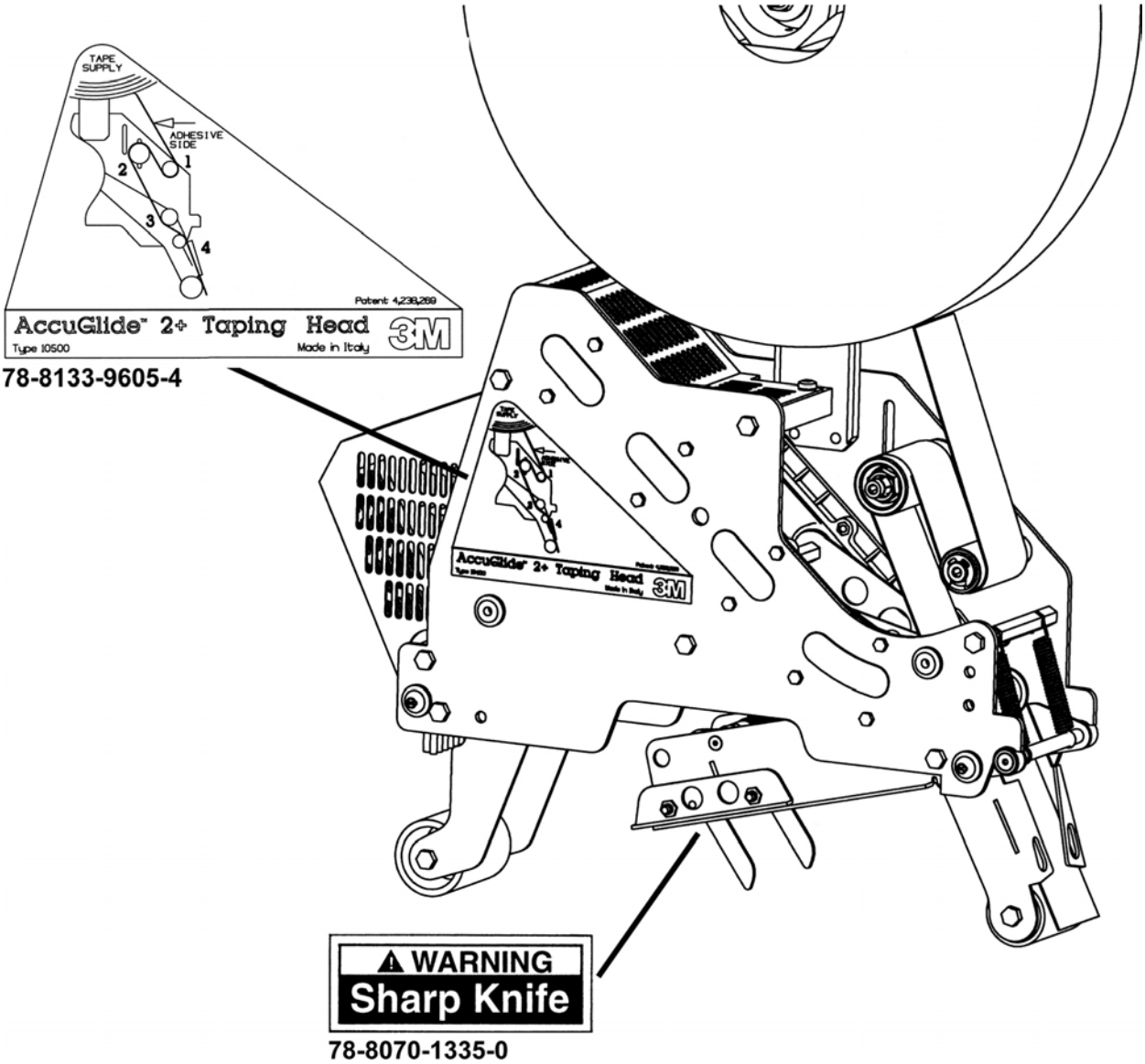

78-8133-9606-2
Tape Threading Label
(Not shown)

Figure 1-1 – Replacement Labels/3M Part Numbers

Specifications

1. **Tape:**

   For use with Scotch® pressure-sensitive film box sealing tapes.

2. **Tape Width:**

   36 mm or 1-1/2 inches minimum to 48 mm [2 inches] maximum.

3. **Tape Roll Diameter:**

   Up to 405 mm [16 inches] maximum on a 76.2 mm [3 inch] diameter core.
   (Accommodates all system roll lengths of Scotch® film tapes.)

4. **Tape Application Leg Length - Standard:**

   70 mm ± 6 mm [2-3/4 inches ±1/4 inch]

   Tape Application Leg Length - Optional:

   50 mm ± 6 mm [2 inches ± 1/4 inch] (See "Adjustments – Tape Leg Length.")

5. **Box Size Capacities:**

   For use with center seam regular slotted containers.

	Minimum	**Maximum**
Length –	150 mm [6 inches]	Unlimited
Height –	120 mm [4-3/4 inches] (most “3M-Matic” Case Sealers) 90 mm [3-1/2 inches] (with optional 2 inch leg length)	Limited by Case Sealer
Width –	115 mm [4-1/2 inches]	

   When upper and lower taping heads are used on **“3M-Matic”** case sealers, refer to the respective instruction manual specifications for box weight and size capacities.

6. **Operating Rate:**

   Conveyor speeds up to 0.40 m/s [80 FPM] maximum.

7. **Operating Conditions:**

   Use in dry, relatively clean environments at 5° to 40° C [40° to 105° F] with clean dry boxes.

   Important – Taping heads should not be washed down or subjected to conditions causing moisture condensation on components.

8. **Taping Head Dimensions:**

Length	–	457 mm [18 inches]
Height	–	560 mm [22 inches] (with tape drum)
Width	–	105 mm [4-1/8 inches] (without mounting spacers)
Weight	–	Packaged: 7.7 kg [17 lbs.] Unpackaged: 6.7 kg [15 lbs.]

Specifications (Continued)

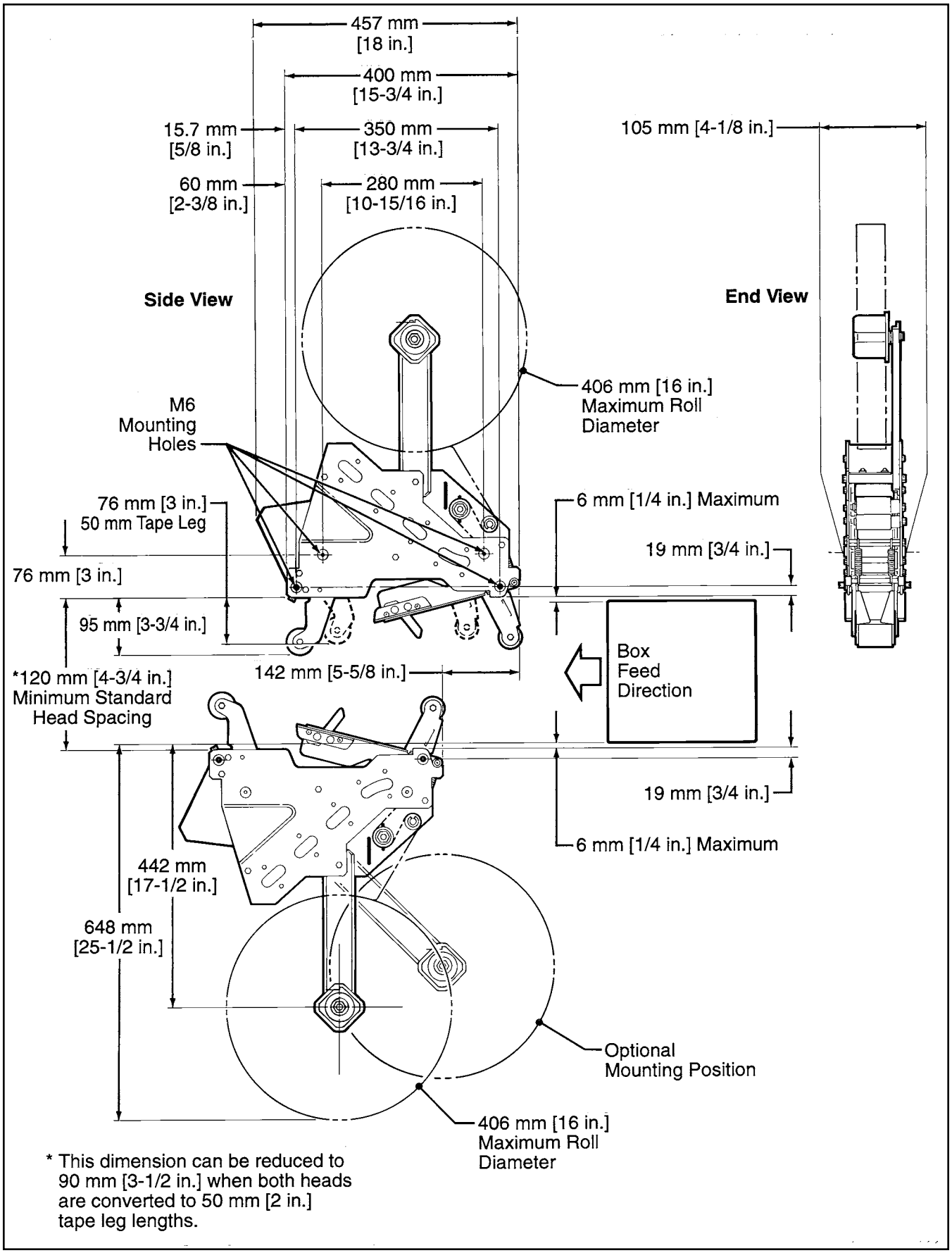

Figure 2-1 – Dimensional Drawing

⚠ WARNING

- **To reduce the risk associated with sharp blade hazards:**
  - Keep hands and fingers away from tape cutoff blades under orange blade guards. The blades are extremely sharp

Receiving And Handling

After the taping head assembly has been unpackaged, examine the unit for damage that might have occurred during transit. **If damage is evident, file a damage claim immediately** with the transportation company and also notify your 3M Representative.

Installation Guidelines

The taping head assembly can be used in converting existing or in custom made machinery.
It can be mounted for top taping or bottom taping. Refer to "Box Size Capacities," as well as Figure 2-1 in the Specifications section, for the following points in making such installations:

⚠ CAUTION

- **To reduce the risk associated with muscle strain:**
  - Use proper body mechanics when removing or installing taping heads that are moderately heavy or may be considered awkward to lift

Important – Always conduct a hazard review to determine appropriate guarding requirements when the installation is in an application other than 3M-Matic(TM) equipment

1. The box conveying system must positively propel the box in a continuous motion, **not exceeding 0.40 m/s [80 feet per minute],** past the taping head assembly since the box motion actuates the taping mechanism.

2. If a pusher or cleated conveyor is being used, steps should be taken in the conveyor design to **prevent the pusher from contacting the applying or buffing roller arms resulting in damage to the taping head.**

3. Figure 2-1 illustrates the typical mounting relationship for opposing taping head assemblies to allow taping of box heights down to 90 mm [3-1/2 inches]. **To tape box heights down to 70 mm [2-3/4 inches], the taping heads must be completely staggered so only one tape seal is being applied at one time.**

   Note – *AccuGlide™ 2+ STD Upper Taping Head is supplied with a buffing arm guard. Adjustments to this guard may be required to install the taping head into some older design 3M-Matic™ case sealers.*

4. Mounting studs are provided with the taping head, but special installations may require alternate means for mounting.

5. Box hold-down or guide skis should be provided and the taping head mounted so that the side plates are 6 mm [1/4 inch] maximum away from the ski surface on which the box rides.

Tape Leg Length

Taping heads are factory set to apply standard 70 mm [2-3/4 inch] tape legs. The heads can be converted to apply 50 mm [2 inch] tape legs if desired but both upper and lower heads must be set to apply the same tape leg length. See "Adjustments – Changing Tape Leg Length From 70 to 50 mm [2-3/4 to 2 Inches]."

Also, the conveyor speed at which the product moves through the taping heads, affects the leading and trailing tape leg length. See "Adjustments section – Leading Tape Leg Length Adjustment."

Tape Width Adjustment

Taping heads are factory set to apply 48 mm [2 inch] wide tape. If it is necessary to align the tape or to apply narrower tapes, refer to "Adjustments – Tape Web Alignment" for set-up procedure.

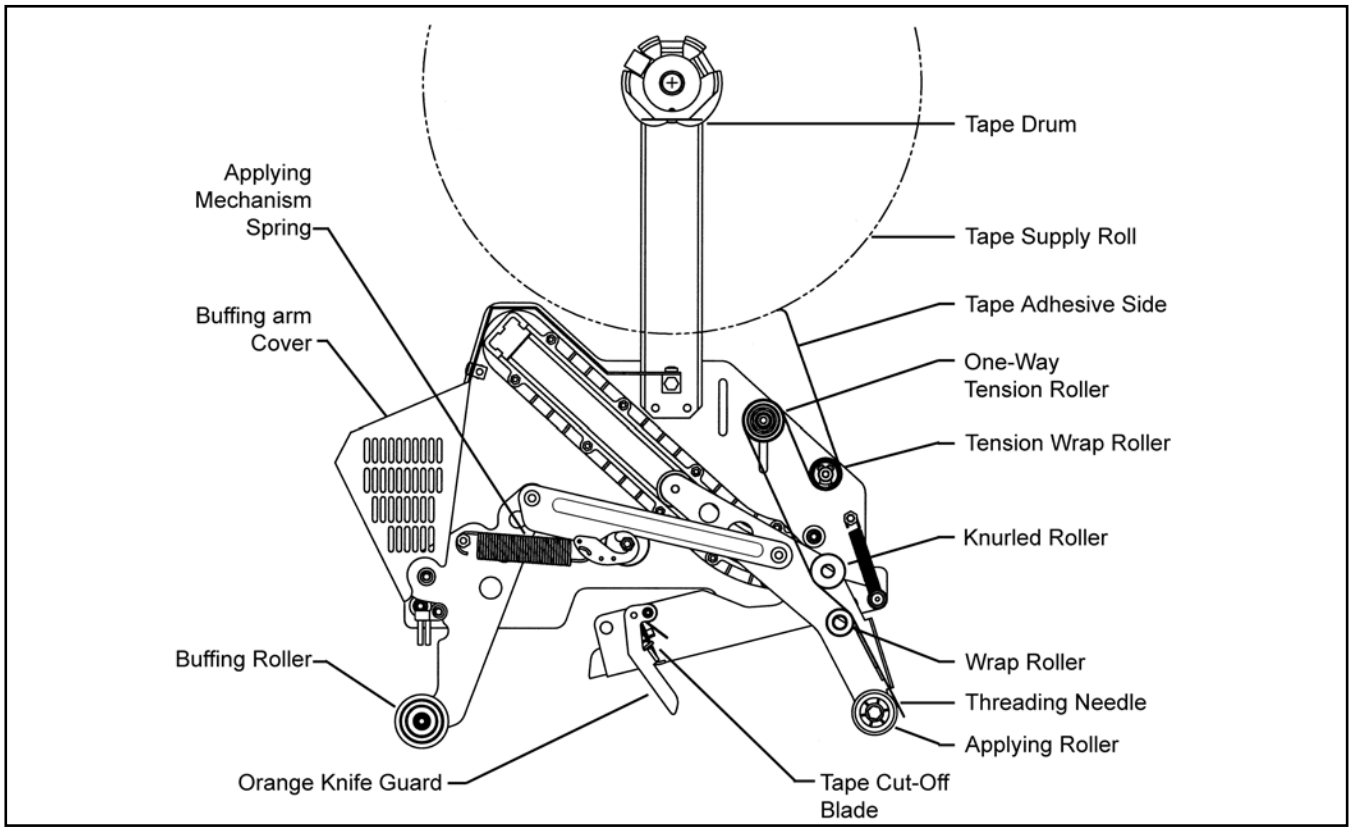

Figure 3-1 – Taping Head Components/Threading Diagram, Upper Head (Left Side View)

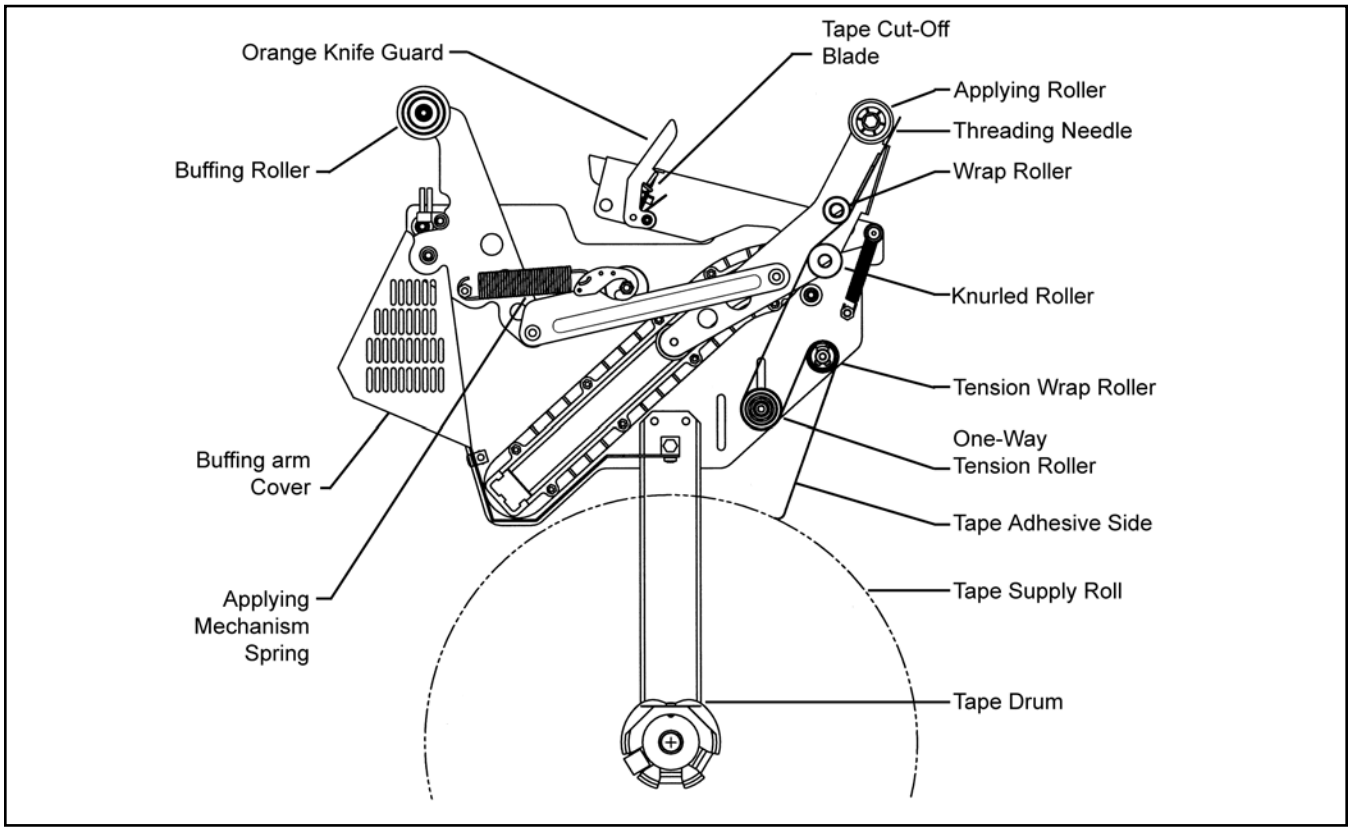

Figure 3-2 – Taping Head Components/Threading Diagram – Lower Head (Left Side View)

⚠ WARNING

- **To reduce the risk associated with shear, pinch, and entanglement hazards:**
  - Turn air and electrical supplies off on associated equipment before performing any adjustments, maintenance, or servicing the machine or taping heads
  - Never attempt to work on the taping heads or load tape when the box drive system is running
- **To reduce the risk associated with sharp blade hazards:**
  - Keep hands and fingers away from tape cutoff blades under orange blade guards. The blades are extremely sharp

It is recommended that the detailed instructions and sketches in this manual be referred to the first few times the taping head is loaded/threaded until the operator becomes thoroughly familiar with the tape loading operation.

***Note** – Remove tape roll before removing taping head from machine to minimize weight.*

⚠ CAUTION

- **To reduce the risk associated with muscle strain:**
  - Use proper body mechanics when removing or installing taping heads that are moderately heavy or may be considered awkward to lift
- **To reduce the risk associated with impact hazards:**
  - Place the taping head on a smooth level surface when maintaining or servicing this equipment

Tape Loading – Upper Taping Head

1. Place the upper taping head in a convenient working position.
2. Use Figures 3-3 to 3-5 and tape threading label. Position the tape supply roll so the adhesive side of tape is facing the front of the taping head as it is pulled from the supply roll.
3. Attach the threading needle to the end of the roll. Guide the threading needle around the wrap roller (Position 1) then back around the one-way tension roller (Position 2).
4. Continue pulling the threading needle down and guide it between the two rollers on the apply arm (Position 3).
5. Pull the threading needle down until the tape travels between the apply plate and the ears of the apply arm (Position 4) until it extends past the applying roller. When properly threaded the adhesive side of the tape should be facing the knurled rollers at position 2 and also position 3.
6. Cut away any excess tape.

   Important – Do not cut against the apply roller - roller damage could occur.

Tape Loading – Lower Taping Head

1. Remove the lower taping head from the conveyor bed or associated equipment and place it a convenient working position.
2. The lower taping head is loaded and threaded in the same manner as the upper head. Follow the upper taping head tape loading/threading procedure.

Figure 3-3

Insert threading needle through rollers in direction indicated by arrows.

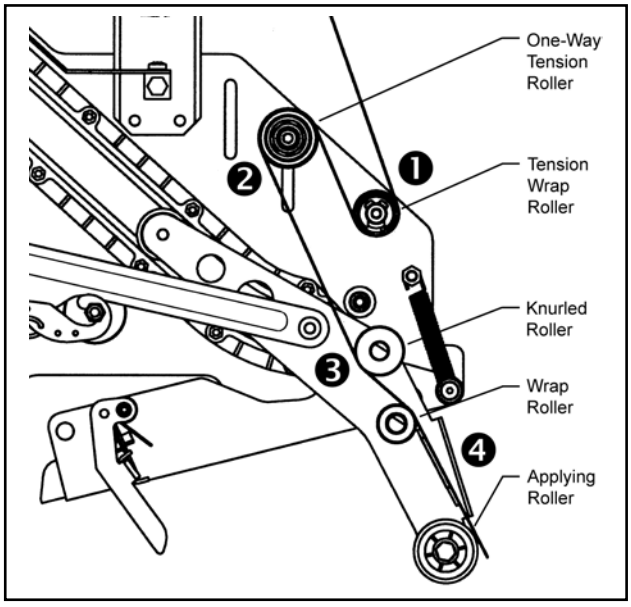

Figure 3-3 – Tape Loading/Threading

Figure 3-4

Place tape roll on tape drum to dispense tape with adhesive side forward. Seat tape roll fully against back flange of drum. Adhere tape lead end to threading needle as shown.

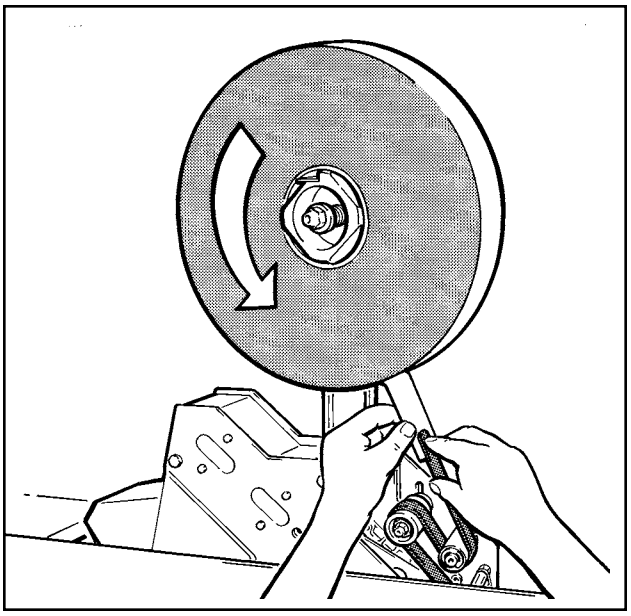

Figure 3-4 – Tape Loading/Threading

Figure 3-5

WARNING

- **To reduce the risk associated with sharp blade hazards:**
  - Keep hands and fingers away from tape cutoff blades under orange blade guards. The blades are extremely sharp

Manually turn tape roll to create slack tape while pulling threading needle through tape applying mechanism until needle is through and tape is in alignment with applying roller.

Excess tape can be cut with a scissors at applying roller.

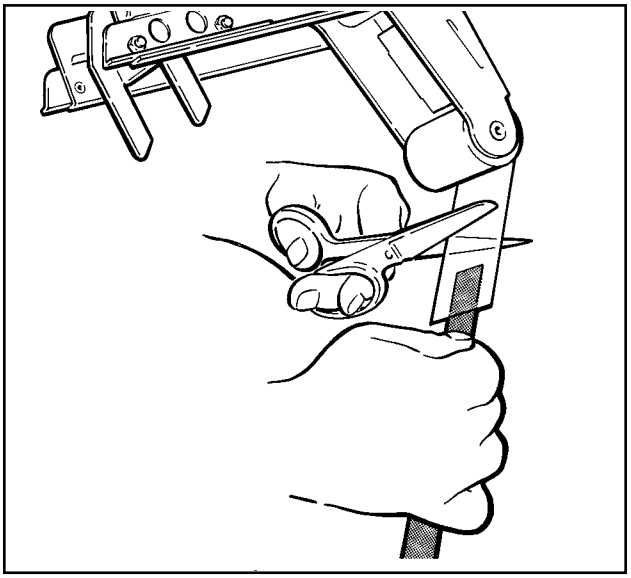

Figure 3-5 – Tape Loading/Threading

WARNING

- **To reduce the risk associated with shear, pinch, and entanglement hazards:**
  - Turn air and electrical supplies off on associated equipment before performing any adjustments, maintenance, or servicing the taping heads
  - Never attempt to work on the taping head or load tape while the box drive system is running
- **To reduce the risk associated with sharp blade hazards:**
  - Keep hands and fingers away from tape cutoff blades under orange blade guards. The blades are extremely sharp

The **AccuGlide™ STD 2+ 2 Inch Taping Head** has been designed for long, trouble free service. The taping head will perform best when it receives routine maintenance and cleaning. Taping head components that fail or wear excessively should be promptly repaired or replaced to prevent damage to other portions of the head or to the product.

Blade Replacement, Upper and Lower Taping Heads – Figure 4-1

WARNING

- **To reduce the risk associated with sharp blade hazards:**
  - Keep hands and fingers away from tape cutoff blade edge. The knives are extremely sharp

1. Loosen, but do not remove, the blade screws **(A)**. Remove and discard old blade.

2. Mount the new blade **(B)** with the **beveled side away** from the blade holder.

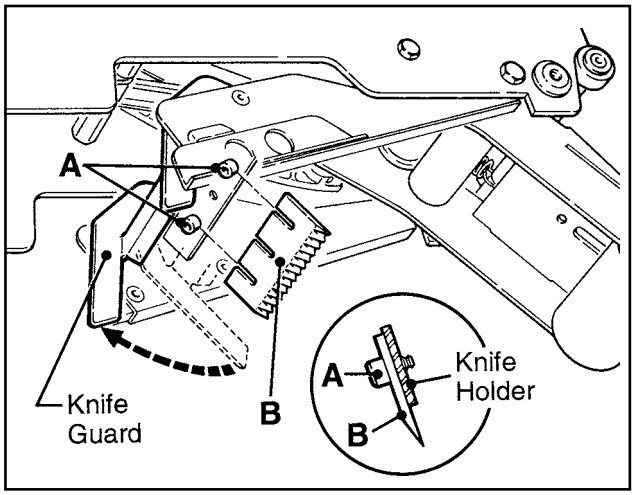

Figure 4-1 – Blade Replacement

3. Bottom the blade slots against the screws. (This will position the blade at the correct angle.) Tighten the blade screws to secure the blade.

   Note – *Check the blade position to insure proper clearance between blade and guard by slowly pivoting the blade guard back.*

Blade Guard

The blade guard covers the blade whenever a box is not being taped. Periodically check to be sure the blade guard is functioning properly and returning to cover the blade. Replace any defective parts.

Blade Oiler Pad

WARNING

- **To reduce the risk associated with sharp blade hazards:**
  - Keep hands and fingers away from tape cutoff blade edge. The knives are extremely sharp

The taping heads are equipped with a felt oiler pad that has been pre-lubricated at the factory to provide a film of oil on the cutting edge of the blade to reduce adhesive build-up. Apply SAE #30 non-detergent oil as needed. **Saturate felt oiler pad.**

Should tape adhesive build-up occur on blade, carefully wipe clean with an oily cloth.

⚠ WARNING

- **To reduce the risk associated with shear, pinch, and entanglement hazards:**
  - Turn air and electrical supplies off on associated equipment before performing any adjustments, maintenance, or servicing the taping heads
  - Never attempt to work on the taping head or load tape while the box drive system is running
- **To reduce the risk associated with sharp blade hazards:**
  - Keep hands and fingers away from tape cutoff blades under orange blade guards. The blades are extremely sharp

Cleaning

Regular slotted containers produce a great deal of dust and paper chips when conveyed through taping heads. If this dust is allowed to build-up on the heads, it can cause wear on the moving parts. Excessive dirt build-up should be wiped off with a damp cloth. Cleaning should be done **once per month,** depending on the number and type of boxes used. If the boxes used are dirty, or if the environment in which the heads operate is dusty, cleaning on a more frequent basis may be necessary.

Note – *Never attempt to remove dirt from taping heads by blowing it out with compressed air. This can cause the dirt to be blown inside the components onto sliding surfaces. Dirt in these areas can cause serious equipment damage. Never wash down or subject taping heads to conditions causing moisture condensation on components. Serious equipment damage could result.*

Applying/Buffing Roller Replacement

Replacing roller requires removal of shaft and mounting screws. With no area on the shaft to grip, the shaft often turns when attempting to remove the second screw.

To ease removal of second screw, a 4 mm hex socket has been provided at the bottom of the threads in both ends of the shaft. Insert a 4 mm hex key wrench into this socket after removing one screw to hold the shaft for removal of the second screw. See Figure 4-3.

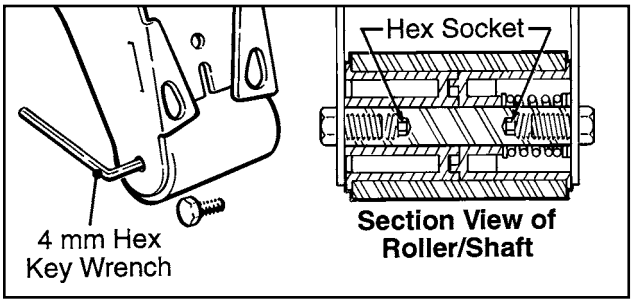

Figure 4-3 – Section View of Roller Shaft

WARNING

- **To reduce the risk associated with shear, pinch, and entanglement hazards:**
  - Turn air and electrical supplies off on associated equipment before performing any adjustments, maintenance, or servicing the machine or taping heads
  - Never attempt to work on the taping head or load tape while the box drive system is running

Tape Latch Alignment – Figure 5-1

The Latching tape drum assembly is pre-set to accommodate 48 mm [2 inch] wide tape. The tape drum assembly is adjustable to provide alignment of narrower tapes.

To move the latch to a position that corresponds to a new tape core width (Figure 5-1):

1. Remove screw from the latch.
2. Move to the latch to the position that corresponds to the tape core width.
3. Replace screw in the new latch location.

To adjust or center the tape width on the centerline of the taping head, and therefore box center seam, (Figure 5-2):

1. Loosen the locking hex nut behind tape drum bracket on tape drum shaft. Use an adjustable wrench or 25 mm open end wrench.
2. Turn tape drum shaft in or out to center the tape web (use 5 mm hex wrench).
3. Tighten locking hex nut to secure the adjustment.

No other components require adjustment for tape web alignment.

Tape Drum Friction Brake – Figure 5-3

The tape drum friction brake on each taping head is **pre-set** for normal operation to prevent tape roll over travel. Should tension adjustment be required, **turn the self-locking nut on the shaft to vary compression of the spring.** Turn the nut **clockwise to increase** the braking force, and **counterclockwise to decrease** the braking force. Adjust brake to minimum tension to prevent excessive tape roll over travel.

Note *– Excess braking force will cause poor tape application and may lead to tape tabbing on the trailing tape leg.*

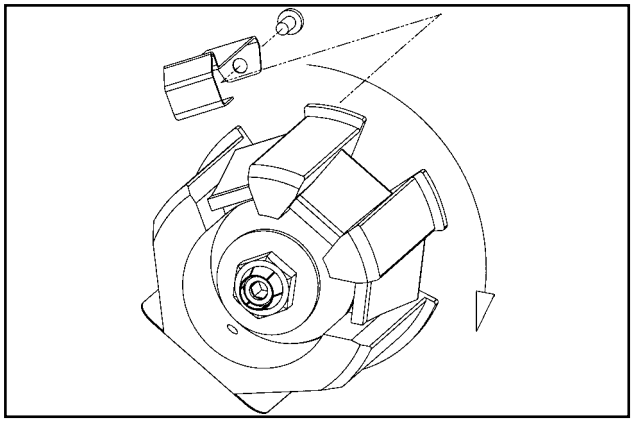

Figure 5-1 – Tape Latch Alignment

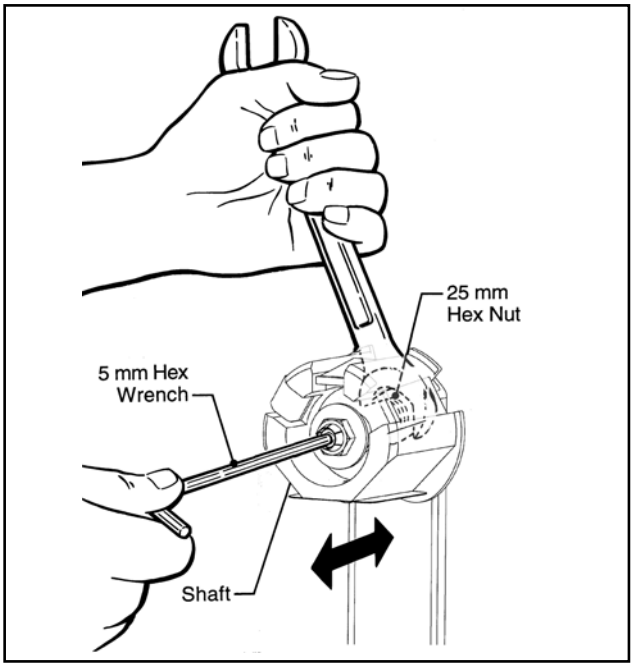

Figure 5-2 – Tape Web Alignment

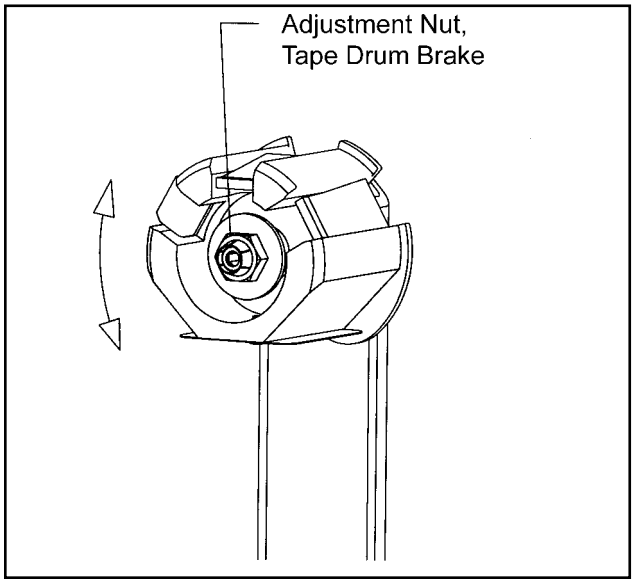

Figure 5-3 – Tape Drum Friction Brake

⚠ WARNING

- **To reduce the risk associated with shear, pinch, and entanglement hazards:**
  - Turn air and electrical supplies off on associated equipment before performing any adjustments, maintenance, or servicing the machine or taping heads
  - Never attempt to work on the taping head or load tape while the box drive system is running

Applying Mechanism Spring

To obtain access to the spring, remove the taping head cover (four mounting screws). Replace cover when finished.

The applying mechanism spring, shown in Figures 5-4A and 5-4B, controls applying and buffing roller pressure on the box and returns the mechanism to the reset position. The spring pressure is pre-set, as shown in Figure 5-3A for normal operation, but is adjustable.

If a tape gap appears on the trailing surface of the box increase spring pressure. If the front of the box is being crushed by the applying roller decrease spring pressure.

Removing the spring end loop from the spring holder and placing loop in other holes provided, as shown in Figure 5-3B, will adjust the spring pressure.

One-Way Tension Roller

Figure 5-5

The one-way tension roller is factory set. When replacing this assembly, the roller must have 0,5 kg [1 lb.] minimum tangential force when turning.

To Adjust Tension:

1. Wrap a cord or small strap (non-adhesive) 4-6 turns around the tension roller.
2. Attach a spring scale to the end of the cord or strap.
3. Turn the adjusting nut with the socket wrench provided, until a force of approximately 0.5 kg to 0.9 kg [1 to 2 lbs.] is required to turn the roller by pulling on the spring scale.

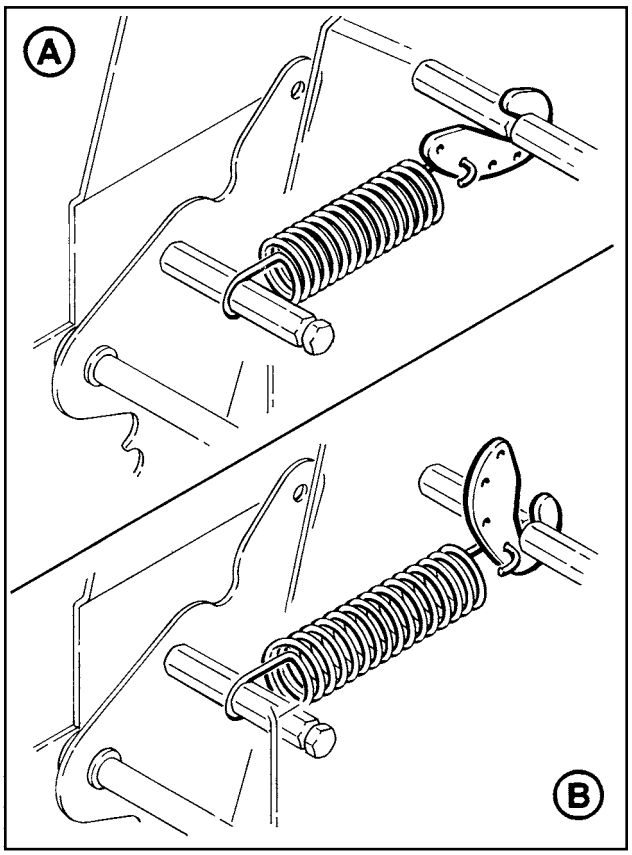

Figure 5-4 – Applying Mechanism Spring

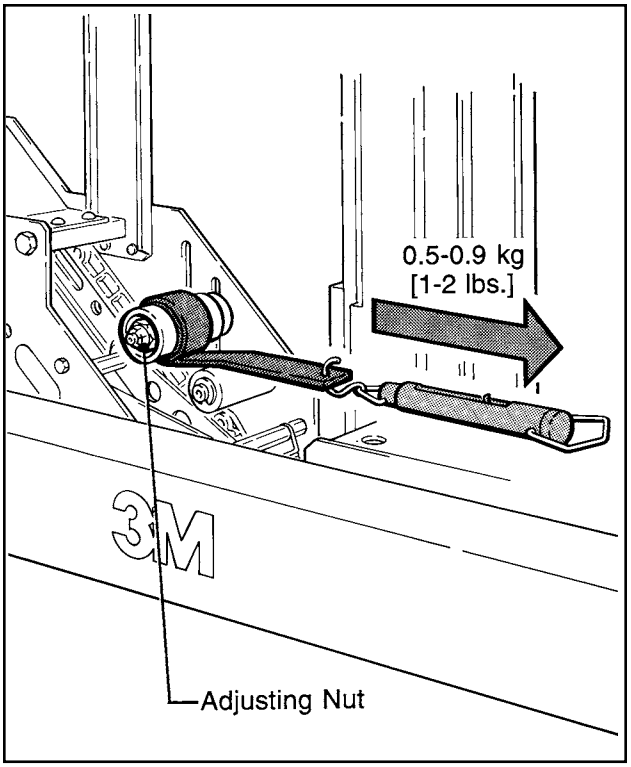

Figure 5-5 – One-Way Tension Roller

⚠ WARNING

- **To reduce the risk associated with shear, pinch, and entanglement hazards:**
  - Turn air and electrical supplies off on associated equipment before performing any adjustments, maintenance, or servicing the machine or taping heads
  - Never attempt to work on the taping head or load tape while the box drive system is running

Tape Leg Length

⚠ WARNING

- **To reduce the risk associated with sharp blade hazards:**
  - Keep hands and fingers away from tape cutoff knives under orange blade guards. The blades are extremely sharp

LEADING TAPE LEG LENGTH ADJUSTMENT – Figure 5-6

The one-way tension roller position is adjustable to control the leading tape leg length.

Moving this roller farther away from the box top or bottom surface will decrease the leading leg length. Moving it closer to the box top or bottom surface will increase the leading leg length.

CHANGING TAPE LEG LENGTH FROM 70 to 50 mm [2-3/4 TO 2 INCHES] – Figure 5-7

Note – *When changing tape leg length, both upper and lower heads must be adjusted to apply the same leg lengths.*

1. Remove and retain two hex head screws and remove the brush from normal position “A” on side frame.
2. Remount and secure brush in position “A-A” on side frame forward of normal location using original fasteners.
3. Remove cut-off bracket extensions from position "B".
4. Remount cut-off bracket extensions in forward position “B-B”.
5. Remove and retain the one-way tension roller assembly from slot “C” in frame.
6. Remount tension roller assembly near top of slot “C-C” in frame using original fasteners.
7. Adjust tension roller according to "Leading Tape Leg Length Adjustment" above.

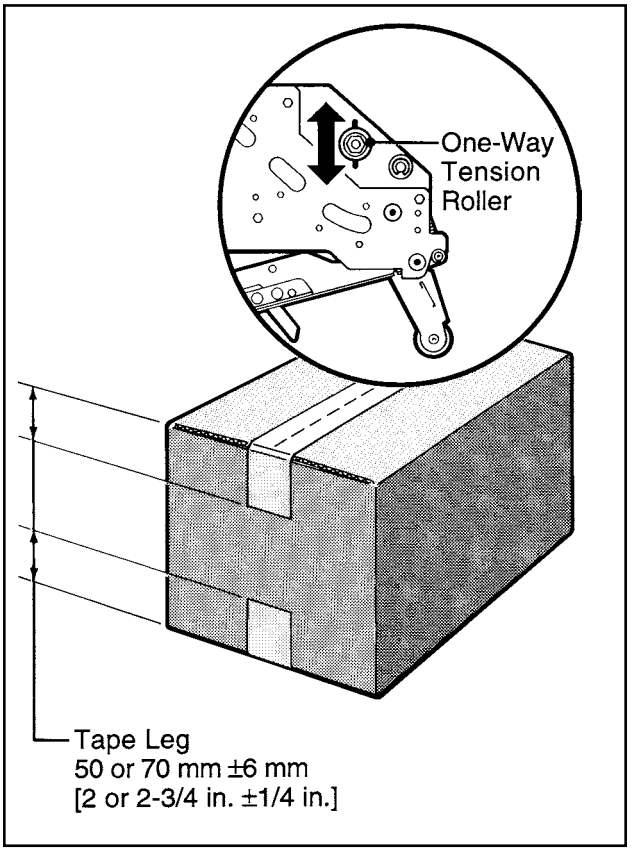

Figure 5-6 – Leading Tape Leg Length

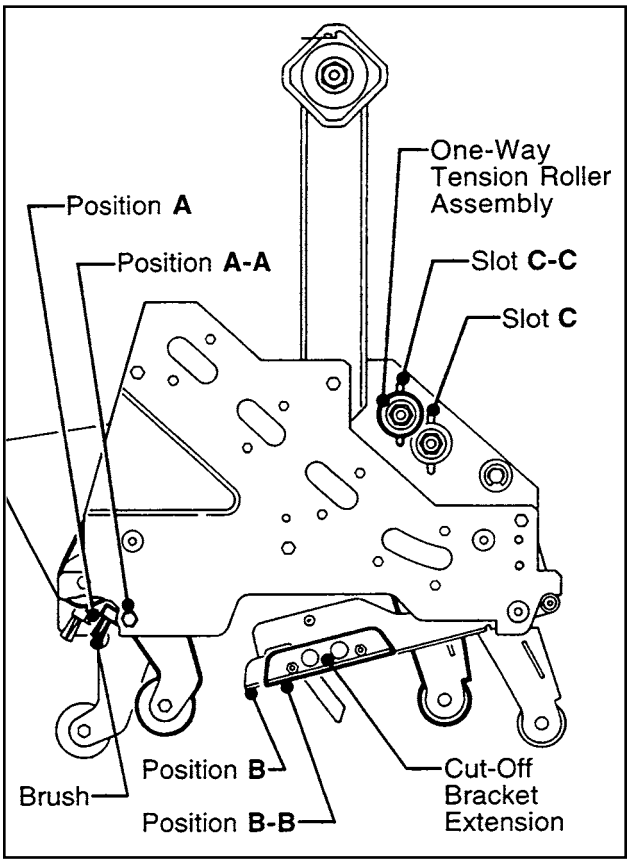

Figure 5-7 – Changing Tape Leg Length

Troubleshooting Guide

Problem	Cause	Correction
The tape leg on the front of the case is too long	The tape is threaded incorrectly	The tape must go around the wrap roller before going around the one-way tension roller
	The tape tension is too low	Adjust the one-way tension roller
	The knurled roller drags	Check for adhesive build-up between the knurled roller and its shaft. Clean and lubricate shaft. Remove all lubricant from roller surfaces.
	Tape tracks to one side or drags on the support tabs of applying frame	Adjust the tape web alignments
	The one-way tension roller is not correctly positioned	Position the roller in its mounting slot so that the tape extends just beyond the centerline of the applying roller
	Taping head is not set up properly	Check leg length adjustments
The blade does not cut tape or the tape end is jagged or shredded	The blade is dull and/or has broken teeth	Replace the blade
	Tape tension is insufficient	Increase tape tension by adjusting the one-way tension roller
	Adhesive has built up on the blade	Clean and adjust the blade
	The blade is not positioned properly	Make sure the blade is bottomed out against the mounting bolts
	The blade is dry	Lubricate the blade oiler pad on the blade guard
	The blade is in backwards	Mount the blade so that the beveled edge is away from the entrance of the head
	One or both cutter springs are missing or stretched	Replace the defective spring(s)
	Tension roller surface is not fully contacting the taping head frame	Make sure one-way bearing is below the surface of the tension roller. If not, press bearing further into roller or replace roller.

(Continued)

Troubleshooting Guide

Problem	Cause	Correction
Tape is tabbing on the trailing leg on the back of the box	There is excess tension on the tape drum assembly and/or the one-way tension roller assembly	Adjust the one-way tension roller and/or the tape drum assembly
	Rollers in the tape path do not rotate freely	Clean adhesive deposits from the surface, ends, and shafts of the rollers. Then lubricate roller shafts. Remove all lubricant from roller surfaces.
	The blade is not cutting tape properly	Refer to tape cutting problems
	The tape is threaded incorrectly	Rethread the tape
	Applying mechanism spring has too little tension	Move spring hook to next tighter hole
The tape end does not stay in application position in front of the applying roller	The tape is incorrectly threaded	Rethread the tape
	Flanged knurled roller overruns on return of applying mechanism to its rest position	Adjust tension roller position in mounting slot to lengthen tape leg
	Applying roller overruns on return of applying mechanism to its rest position	There should be a slight drag when rotating the applying roller. If not, check friction springs and/or friction pins and replace if necessary
	The one-way tension roller is not correctly positioned	Position roller in it mounting slot so that tape end extends beyond centerline of applying roller
	The one-way tension roller is defective	Replace the one-way tension roller
Tape not centered on box seam	Tape drum not centered	Reposition tape drum
	Centering guides not centered	Adjust centering guides
	Box flaps not of equal length	Check box specifications

Spare Parts/Service Information

Recommended Spare Parts

A set of spare parts that will periodically require replacement due to normal wear is supplied with the taping heads. The set includes the following which should be reordered when used to keep the taping heads in production:

AccuGlide™ 2+ STD 2 Inch Upper Taping Head

Qty.	Ref. No.	Part Number	Description
4	10397-22	78-8076-4500-3	Stud – Mounting
1	10387-10	78-8070-1274-1	Spring – Upper Extension (Silver)
1	10391-2	78-8017-9173-8	Blade – 65 mm/2.56 Inch
2	10391-12	78-8052-6602-6	Spring – Cutter
1	–	78-8076-4726-4	Tool – Tape Threading

AccuGlide™ 2+ STD 2 Inch Lower Taping Head

Qty.	Ref. No.	Part Number	Description
1	10391-2	78-8017-9173-8	Blade – 65 mm/2.56 Inch
2	10391-12	78-8052-6602-6	Spring – Cutter
4	10399-22	78-8076-4500-3	Stud – Mounting
1	10389-10	78-8070-1273-3	Spring – Lower Extension (Black)
1	–	78-8076-4726-4	Tool – Tape Threading

In addition to the above set of spare parts supplied with the taping head, it is suggested that the following spare parts be maintained which will require replacement under normal wear of the taping head.

Qty.	Ref. No.	Part Number	Description
1	10393-15	78-8057-6179-4	Roller – Applying
1	10387/10389-5	78-8057-6178-6	Roller – Buffing
1	10391-18	78-8113-7030-9	Spring – Torsion

Replacement Parts and Service

Refer to the first page of this instruction manual **“Replacement Parts and Service Information".**

Replacement Parts Illustrations and Parts Lists

AccuGlide™ 2+ STD 2 Inch Upper Taping Head, Type 10500
AccuGlide™ 2+ STD 2 Inch Lower Taping Head, Type 10500

1. Refer to the **Taping Head Assemblies** Figure to find all the parts illustrations identified by **figure numbers.**

2. Refer to the figure or figures to determine the **individual parts** required and the **parts reference number.**

3 . The **replacement parts list,** that follows each illustration, includes the **part number** and **part description** for the parts in that illustration.

   Note *– The complete description has been included for standard fasteners and some commercially available components. This has been done to allow obtaining these standard parts locally, should the customer elect to do so.*

4. Refer to the first page of this instruction manual **"Replacement Parts and Service Information"** for replacement parts ordering information.

IMPORTANT – Not all the parts listed are normally stocked items. Some parts or assemblies shown are available only on a special order basis. Contact 3M/Tape Dispenser Parts to confirm item availability.

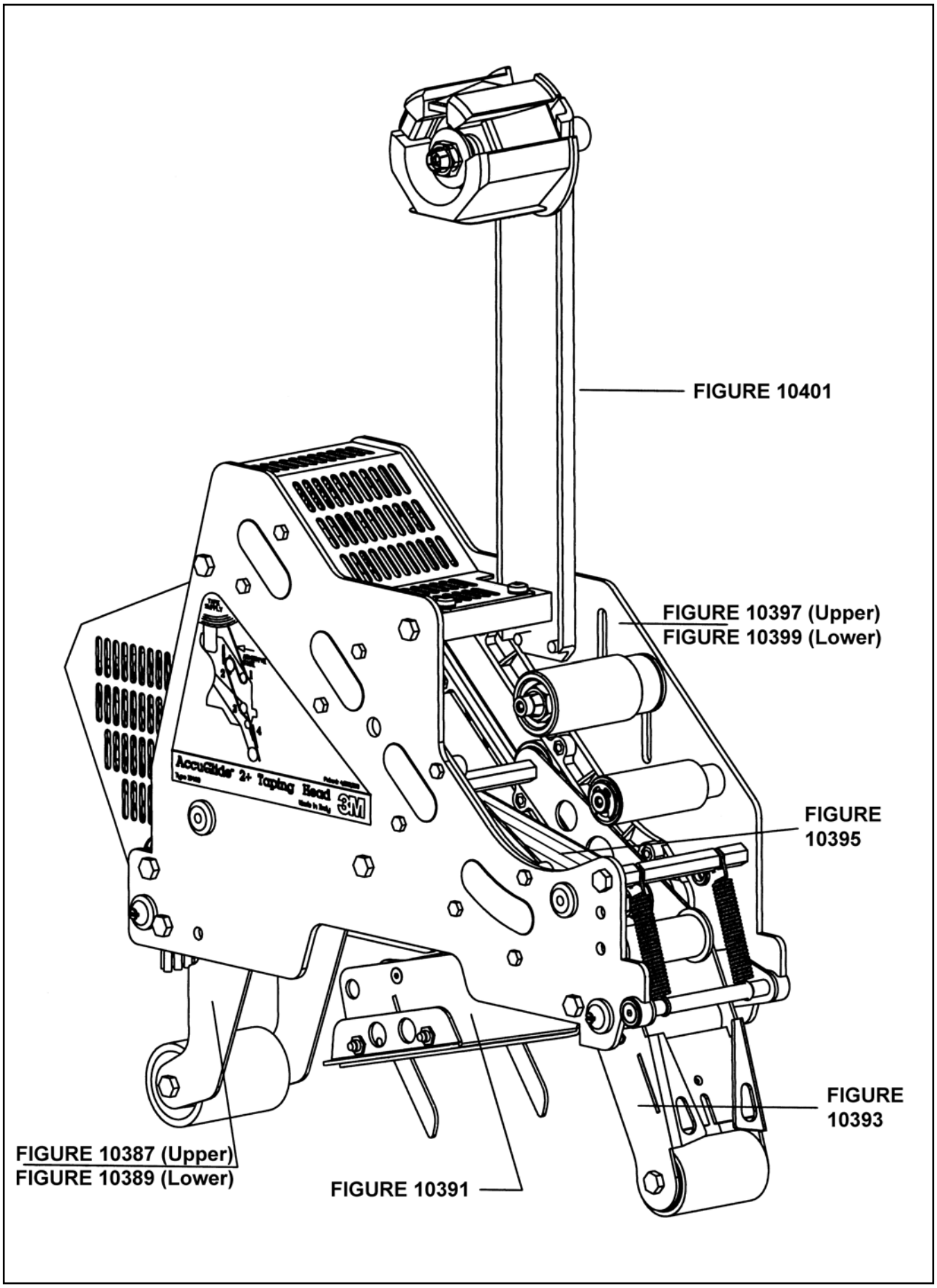

Taping Head Assemblies – AccuGlide™ 2+ STD 2 Inch

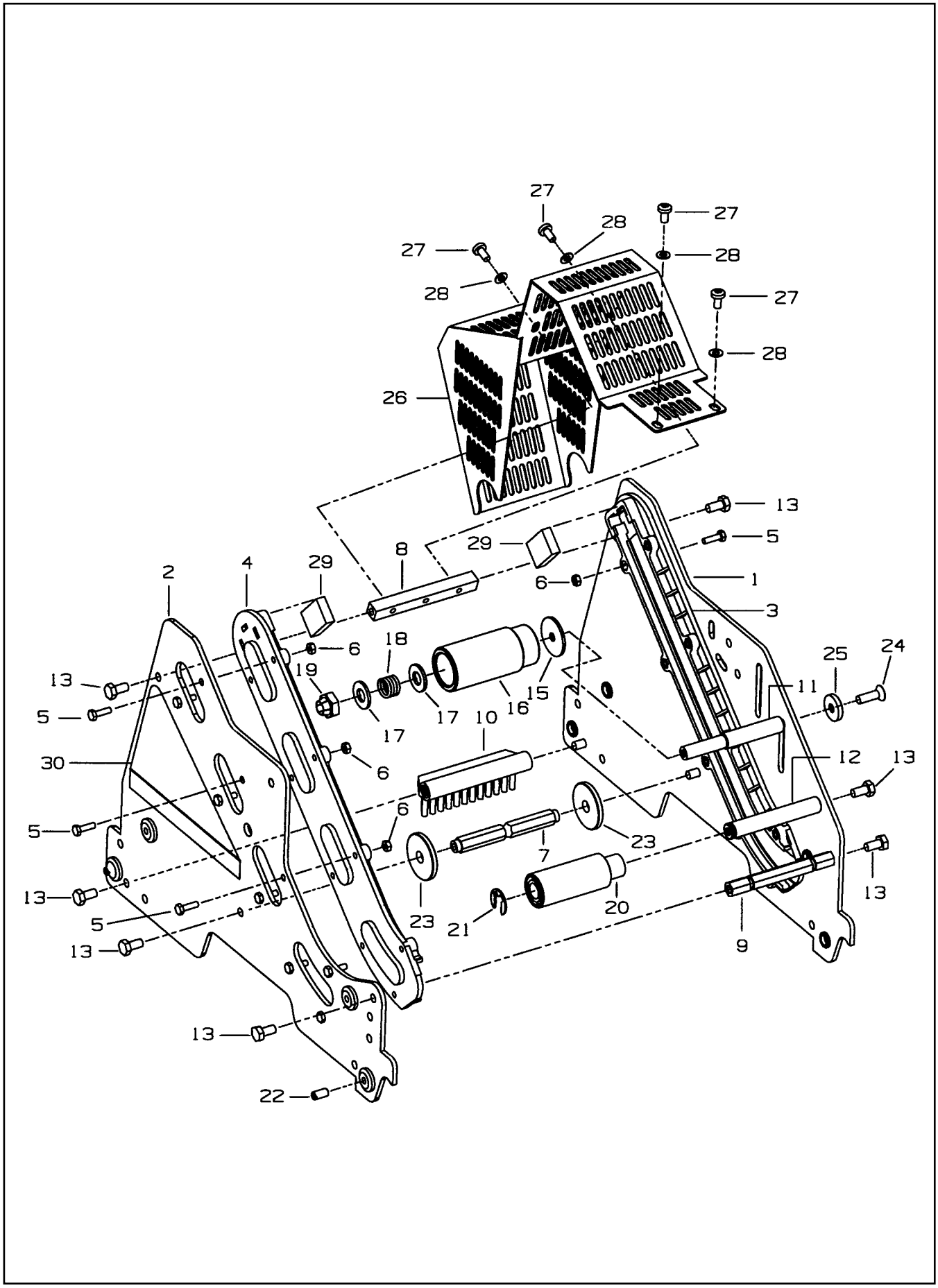

Figure 10397 – Upper Head

Figure 10397 – 2" Upper Head

Ref. No.	3M Part No.	Description
10397-1	78-8133-9456-2	Frame – Tape Mount Upper Assembly
10397-2	78-8133-9458-8	Frame – Front Upper Assembly
10397-3	78-8068-4143-9	Guide – #1
10397-4	78-8068-4144-7	Guide – #2
10397-5	78-8060-7818-0	Screw – Hex Hd, M4 x 12
10397-6	78-8010-7416-8	Nut – Hex Jam, M4
10397-7	78-8070-1251-9	Spacer – Spring
10397-8	78-8054-8764-8	Spacer – 10 x 10 x 90 mm
10397-9	78-8052-6560-6	Spacer – Front
10397-10	78-8060-7936-0	Brush Assembly
10397-11	78-8052-6564-8	Shaft – Tension Roller
10397-12	78-8052-6568-9	Shaft – Wrap Roller
10397-13	26-1003-5829-5	Screw – Hex Hd, M6 x 12
10397-15	78-8100-1009-6	Washer – Special
10397-16	78-8052-6565-5	Roller – Top Tension
10397-17	26-1004-5510-9	Washer – Plain, M10
10397-18	78-8052-6567-1	Spring – Compression
10397-19	78-8017-9077-1	Nut – Self Locking, M10 x 1
10397-20	78-8052-6569-7	Roller – Wrap
10397-21	26-1000-1613-3	Ring – Retaining, Tru-Arc #1-420-0120-100
10397-22	78-8076-4500-3	Stud – Mounting
10397-23	78-8076-5242-1	Stop – Cut-Off Frame
10397-24	78-8060-8179-6	Screw – Flat Hd Hex, M6 x 20
10397-25	78-8076-5477-3	Washer – Special /6.5 x 20 x 4
10397-26	78-8100-1047-6	Guard – Head
10397-27	78-8060-8087-1	Screw – M5 x 10
10397-28	78-8005-5741-1	Washer – Flat, M5
10397-29	78-8133-9615-3	Bumper
10397-30	78-8133-9605-4	Label – Threading, English Language

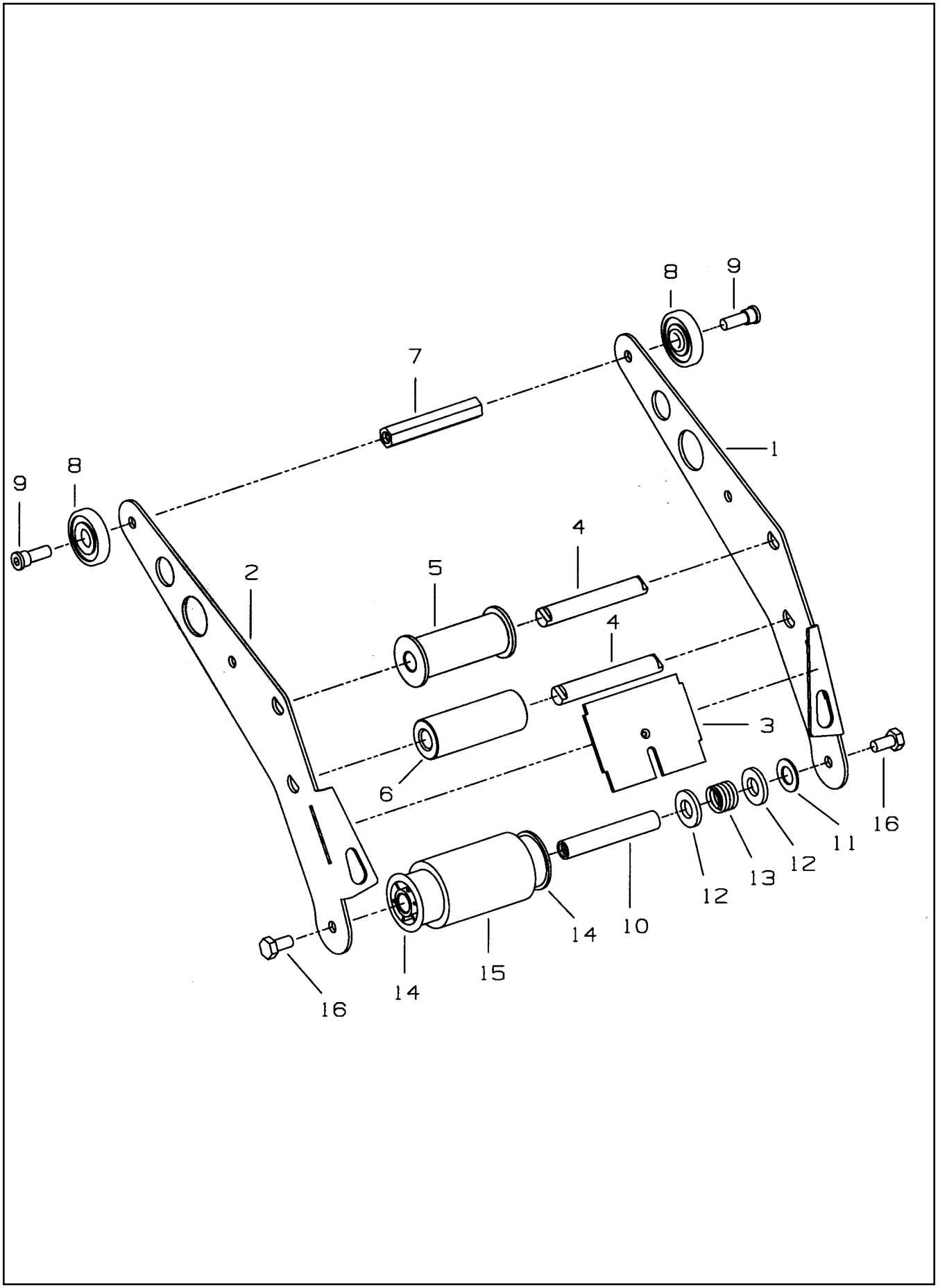

Figure 10393 – Upper and Lower Heads

Figure 10393 – 2" Upper and Lower Heads

Ref. No.	3M Part No.	Description
10393-1	78-8133-9509-8	Applying Arm #1
10393-2	78-8133-9510-6	Applying Arm #2
10393-3	78-8070-1221-2	Plate – Tape
10393-4	78-8070-1309-5	Shaft Roller
10393-5	78-8070-1367-3	Roller – Knurled Assembly
10393-6	78-8070-1266-7	Roller – Wrap
10393-7	78-8052-6580-4	Spacer
10393-8	78-8017-9082-1	Bearing – Special, 30 mm
10393-9	78-8017-9106-8	Screw – Bearing Shoulder
10393-10	78-8052-6575-4	Shaft – Roller
10393-11	78-8017-9074-8	Washer – Nylon, 15 mm
10393-12	78-8052-6566-3	Washer – Friction
10393-13	78-8052-6567-1	Spring – Compression
10393-14	78-8060-8395-8	Bushing – Applying Roller
10393-15	78-8057-6179-4	Roller – Applying
10393-16	26-1003-5829-5	Screw – Hex Hd, M6 x 12

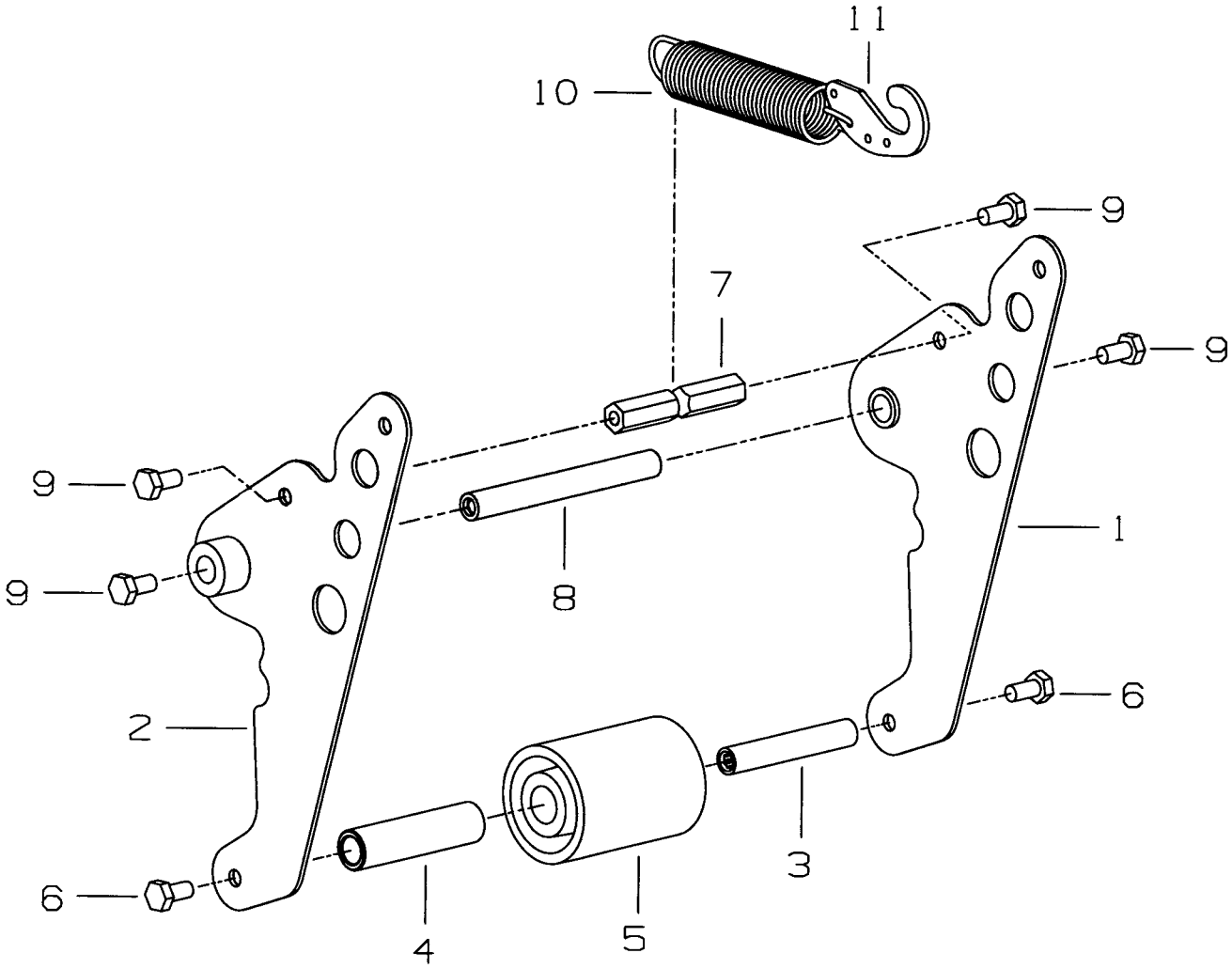

Figure 10387 – Upper Head

Figure 10387 – 2" Upper Head

Ref. No.	3M Part No.	Description
10387-1	78-8070-1392-1	Buffing Arm – Sub Assembly
10387-2	78-8070-1391-3	Buffing Arm – Sub Assembly
10387-3	78-8052-6575-4	Shaft – Roller
10387-4	78-8052-6586-1	Bushing – Buffing Roller
10387-5	78-8057-6178-6	Roller – Buffing
10387-7	78-8070-1220-4	Spacer – Spring
10387-8	78-8017-9109-2	Shaft – 10 x 90 mm
10387-9	26-1003-5829-5	Screw – Hex Hd, M6 x 12
10387-10	78-8070-1274-1	Spring – Upper (Silver)
10387-11	78-8070-1244-4	Holder – Spring

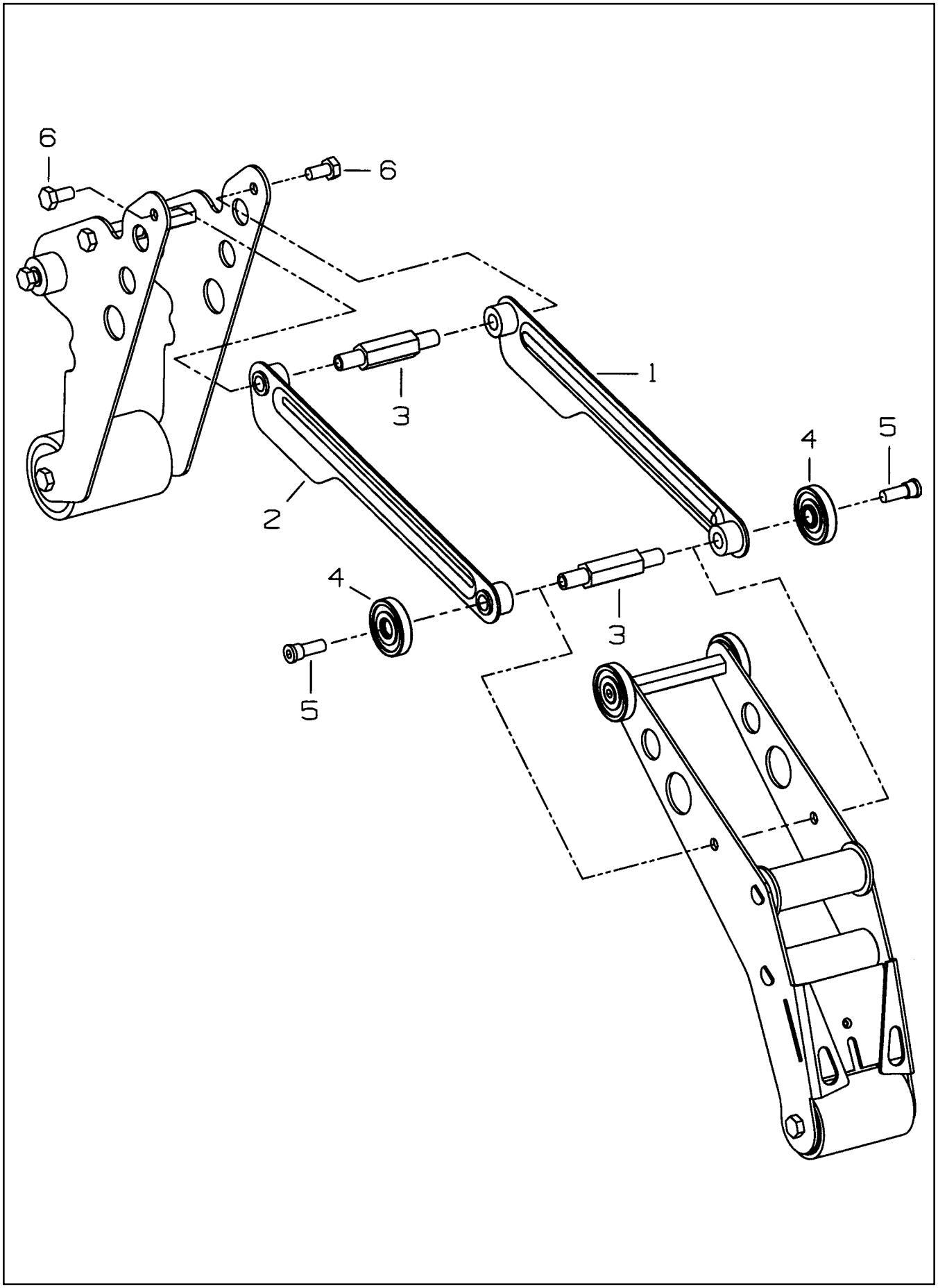

Figure 10395 – Upper and Lower Heads

Figure 10395 – 2" Upper and Lower Heads

Ref. No.	3M Part No.	Description
10395-1	78-8070-1388-9	Link – Arm Bushing Assembly
10395-2	78-8070-1389-7	Link – Arm Bushing Assembly
10395-3	78-8070-1271-7	Shaft – Pivot
10395-4	78-8017-9082-1	Bearing – Special 30 mm
10395-5	78-8017-9106-8	Screw – Bearing Shoulder
10395-6	26-1003-5829-5	Screw – Hex Hd, M6 x 12

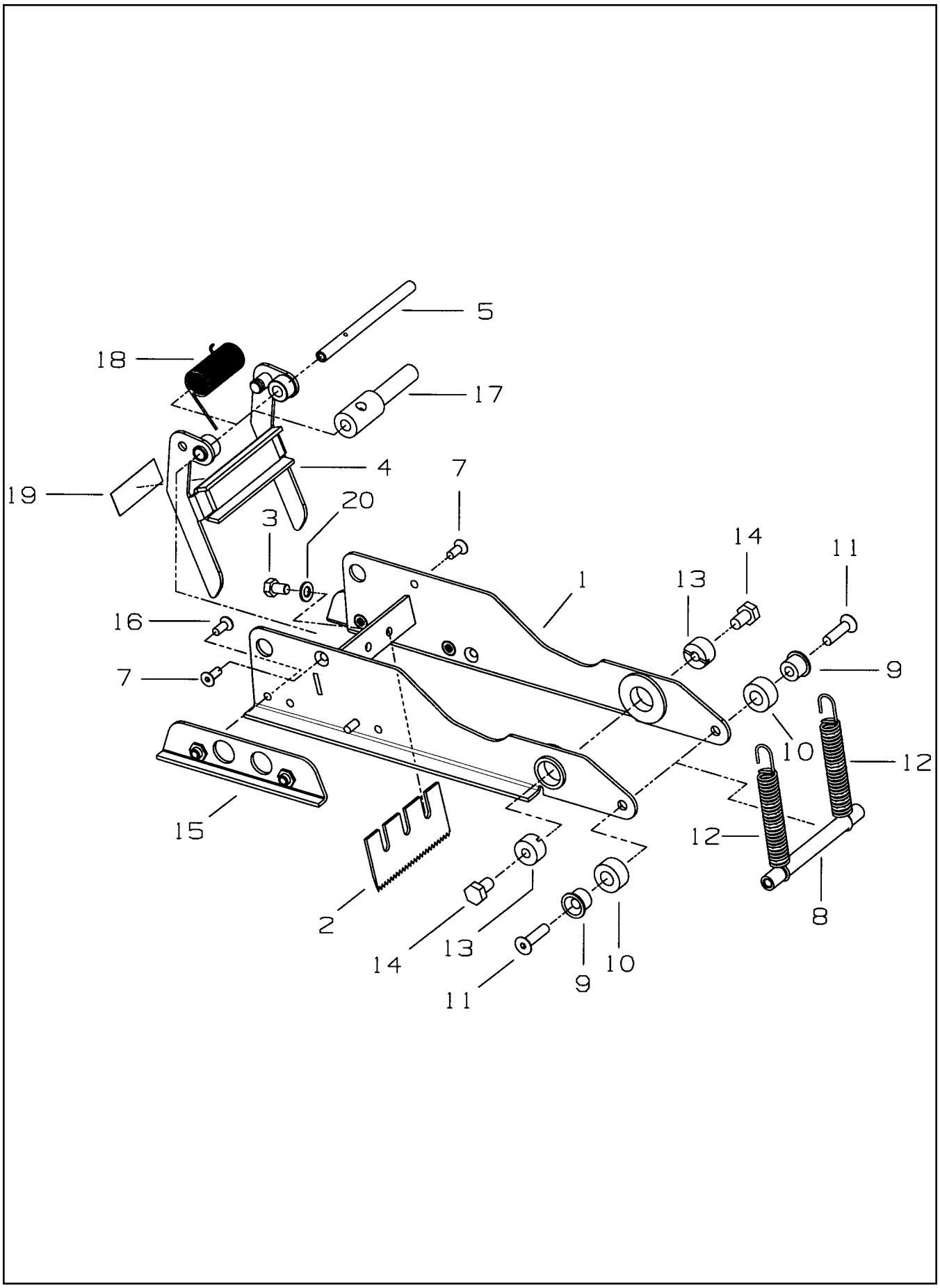

Figure 10391 – Upper and Lower Heads

Figure 10391 – 2" Upper and Lower Heads

Ref. No.	3M Part No.	Description
10391-1	78-8070-1217-0	Frame – Cut-Off Weldment
10391-2	78-8017-9173-8	Blade – 65 mm/2.56 Inch
10391-3	26-1002-5817-2	Screw – Hex Hd, M5 x 8
10391-4	78-8070-1371-5	Blade Guard Assembly – W/English Language Label
10391-5	78-8052-6597-8	Shaft – Blade Guard
10391-7	26-1005-4758-2	Screw – Flat Hd, Soc Dr, M4 x 10
10391-8	78-8017-9135-7	Shaft – Spacer
10391-9	78-8052-6600-0	Spacer
10391-10	78-8070-1269-1	Bumper
10391-11	26-1005-4757-4	Screw – Flat Hd, Soc Dr, M5 x 20
10391-12	78-8052-6602-6	Spring – Cutter
10391-13	78-8017-9132-4	Pivot – Cutter Lever
10391-14	26-1003-5828-7	Screw – Spec, Hex Hd, M6 x 10
10391-15	78-8070-1216-2	Slide – Extension
10391-16	26-1008-6574-5	Screw – Flat Hd, Phil Dr, M4 x 10
10391-17	78-8113-7031-7	Bushing – 58.5 mm Long
10391-18	78-8113-7030-9	Spring – Torsion
10391-19	78-8070-1335-0	Label – Warning, English

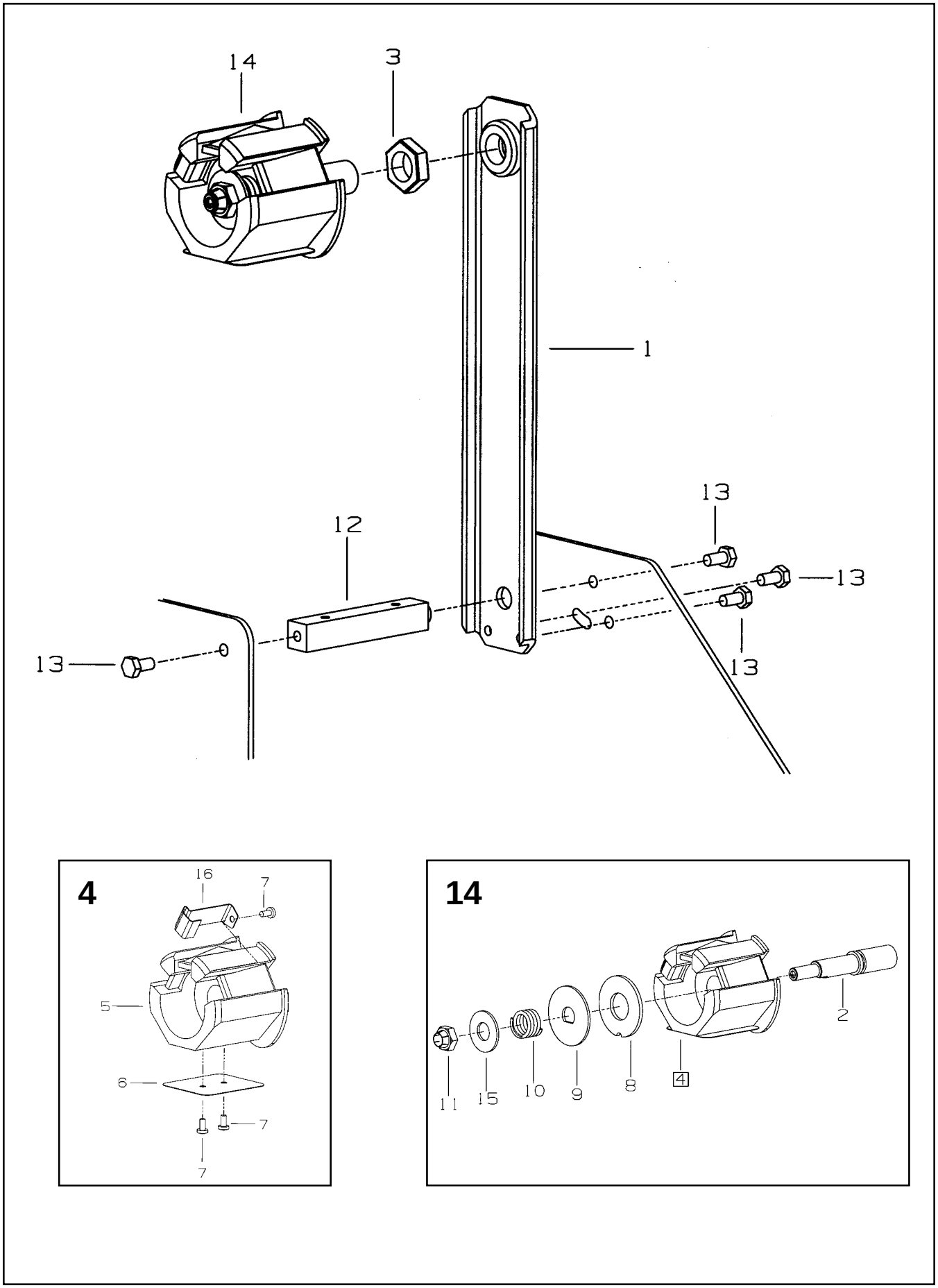

Figure 10401 – Upper and Lower Heads

Figure 10401 – 2" Latch Upper and Lower Heads

Ref. No.	3M Part No.	Description
10401-1	78-8070-1395-4	Bracket – Bushing Assembly
10401-2	78-8076-4519-3	Shaft – Tape Drum, 50 mm
10401-3	78-8017-9169-6	Nut – M18 x 1
10401-4	78-8098-8827-0	Tape Drum Sub Assembly – 2 Inch Wide
10401-5	78-8098-8749-6	Tape Drum
10401-6	78-8098-8817-1	Leaf Spring
10401-7	26-1002-5753-9	Screw – Self Tapping
10401-8	78-8060-8172-1	Washer – Friction
10401-9	78-8052-6271-0	Washer – Tape Drum
10401-10	78-8100-1048-4	Spring – Core Holder
10401-11	78-8017-9077-1	Nut – Self Locking, M10 x 1
10401-12	78-8100-1046-8	Spacer – Bracket
10401-13	26-1003-5829-5	Screw – Hex Hd, M6 x 12
10401-14	78-8098-8814-8	Tape Drum Assembly – 2 Inch Head
10401-15	26-1004-5510-9	Washer – Plain, M10
10401-16	78-8098-8816-3	Latch – Tape Drum

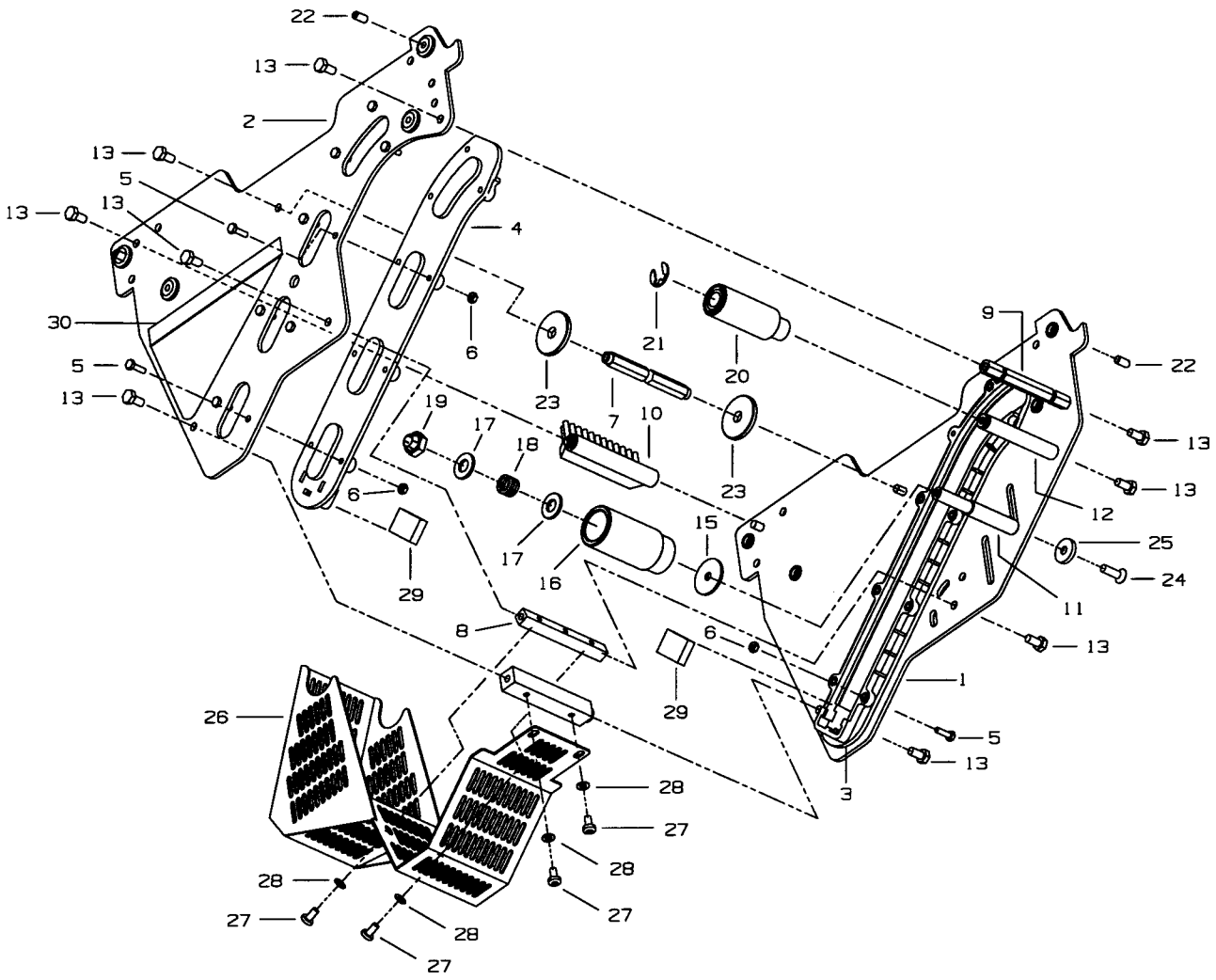

Figure 10399 – Lower Head

Figure 10399 – 2" Lower Head

Ref. No.	3M Part No.	Description
10399-1	78-8133-9502-3	Frame – Tape Mount Lower Assembly
10399-2	78-8133-9500-7	Frame – Front Lower Assembly
10399-3	78-8068-4144-7	Guide – #2
10399-4	78-8068-4143-9	Guide – #1
10399-5	78-8060-7818-0	Screw – Hex Hd, M4 x 12
10399-6	78-8010-7416-8	Nut – Hex, M4
10399-7	78-8070-1251-9	Spacer – Spring
10399-8	78-8054-8764-8	Spacer – 10 x 10 x 90 mm
10399-9	78-8052-6560-6	Spacer – Front
10399-10	78-8060-7936-0	Brush Assembly
10399-11	78-8052-6564-8	Shaft – Tension Roller
10399-12	78-8052-6568-9	Shaft – Wrap Roller
10399-13	26-1003-5829-5	Screw – Hex Hd, M6 x 12
10399-15	78-8100-1009-6	Washer – Special
10399-16	78-8052-6606-7	Roller – Tension Bottom
10399-17	26-1004-5510-9	Washer – Plain, M10
10399-18	78-8052-6567-1	Spring – Compression
10399-19	78-8017-9077-1	Nut – Self Locking, M10 x 1
10399-20	78-8052-6569-7	Roller – Wrap
10399-21	26-1000-1613-3	Ring – Retaining, Tru-Arc #1-420-0120-100
10399-22	78-8076-4500-3	Stud – Mounting
10399-23	78-8076-5242-1	Stop – Cut-Off Frame
10399-24	78-8060-8179-6	Screw – Flat Hd Hex, M6 x 20
10399-25	78-8076-5477-3	Washer – Special /6.5 x 20 x 4
10399-26	78-8100-1047-6	Guard – Head
10399-27	78-8060-8087-1	Screw – M5 x 10
10399-28	78-8005-5741-1	Washer – Flat, M5
10399-29	78-8076-4734-8	Bumper
10399-30	78-8133-9606-2	Label – Threading, English Language

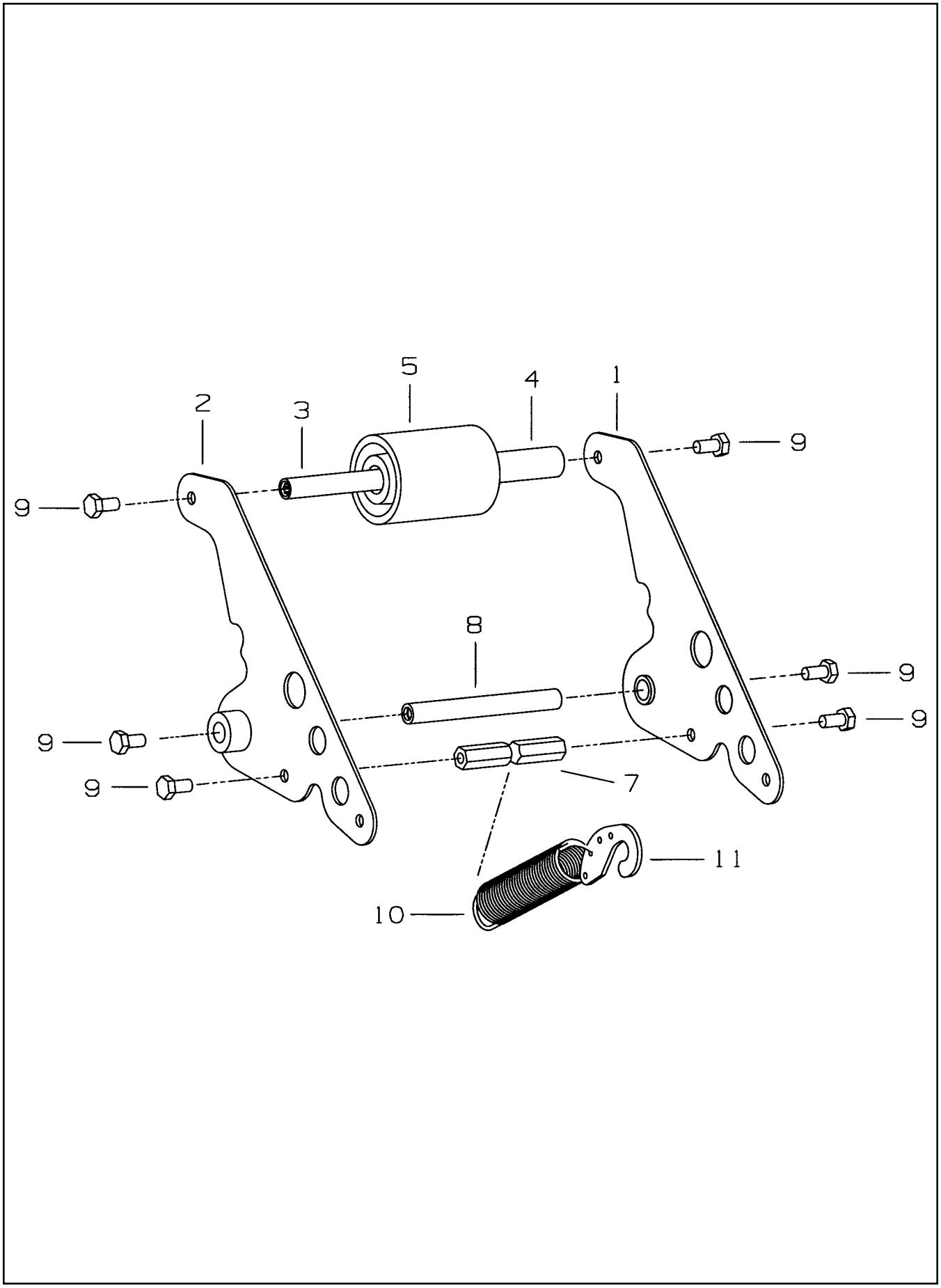

Figure 10389 – Lower Head

Figure 10389 – Lower Head

Ref. No.	3M Part No.	Description
10389-1	78-8070-1391-3	Buffing Arm Sub Assembly, #1
10389-2	78-8070-1392-1	Buffing Arm Sub Assembly, #2
10389-3	78-8052-6575-4	Shaft – Roller
10389-4	78-8052-6586-1	Bushing – Buffing Roller
10389-5	78-8057-6178-6	Roller – Buffing
10389-7	78-8070-1220-4	Spacer – Spring
10389-8	78-8017-9109-2	Shaft – 10 x 90 mm
10389-9	26-1003-5829-5	Screw – Hex Hd, M6 x 12
10389-10	78-8070-1273-3	Spring – Lower (Black)
10389-11	78-8070-1244-4	Holder – Spring