Instructions and Parts List

3M-Matic™

200a Type 40800 Adjustable Case Sealer with AccuGlide™ 3 Taping Heads

Serial No._____
For reference, record machine serial number here.

Important Safety Information

BEFORE INSTALLING OR OPERATING THIS EQUIPMENT
Read, understand, and follow all safety and operating instructions.

Spare Parts

It is recommended you immediately order the spare parts listed in the "Spare Parts/Service Information" section. These parts are expected to wear through normal use, and should be kept on hand to minimize production delays.

3M Industrial Adhesives and Tapes
3M Center, Building 220-5E-06
St. Paul, MN 55144-1000

"3M-Matic"and "AccuGlide" are Trademarks of, 3M St. Paul, MN 55144-1000
Printed in U.S.A.
© 3M 2011 44-0009-2072-6 (D060311-NA)

This instruction manual covers safety aspects, handling and transport, storage, unpacking, preparation, installation, operation, adjustments, maintenance, troubleshooting, repair work and servicing plus parts list of the **3M-Matic™ 200a** Adjustable case sealer.

3M Industrial Adhesives and Tapes
3M Center, Building 220-5E-06
St. Paul, MN 55144-1000

Edition June 2011

Copyright 3M 2011
All rights reserved

The manufacturer reserves the right to change the product at any time without notice.

To Our Customers:

This is the 3M-Matic™/AccuGlide™/Scotch® equipment you ordered.
It has been set up and tested in the factory with Scotch® tapes.
If technical assistance or replacement parts are needed, call or fax the appropriate number.

Included with each machine is an Instructions and Parts List manual.

Technical Assistance / Replacement Parts and Additional Manuals:

Contact your local service provider help line. Provide the customer support coordinator with the model/machine name, machine type, and serial number that are located on the identification plate (For example: Model 200a - Type 40800 - Serial Number 13282).

Identification Plate

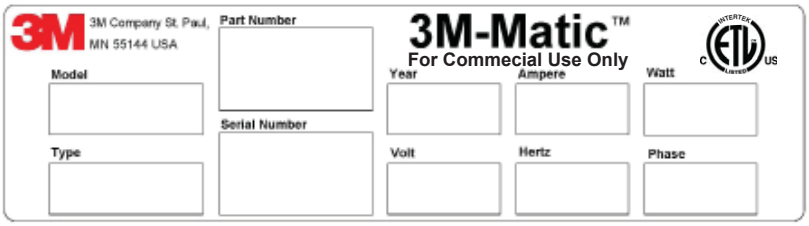

3M Industrial Adhesives and Tapes
3M Center, Building 220-5E-06
St. Paul, MN 55144-1000

3M-Matic™, AccuGlide™ and Scotch™ are Trademarks of
3M St. Paul, MN 55144-1000
Printed in U.S.A.

TABLE OF CONTENTS - MANUAL 1: 200a Adjustable Case Sealer
(For Taping Head Information - See MANUAL 2: AccuGlide™ 3 Taping Heads - 2 inch)

200a Adjustable Case Sealer **Page**

Cover Page
Replacement Parts and Service Information ..... i - ii
Table of Contents ..... iii - v
Acronyms and Abbreviations vi

1. Introduction

1.1 Manufacturing Specifications / Description / Intended Use ..... 1 - 2
1.2 How to Read and Use the Manual 2
1.2.1 Importance of the Manual 2
1.2.2 Manual Maintenance 2
1.2.3 Consulting the Manual 2
1.2.4 How to Update the Manual in Case of Modifications 2

2. General Information

2.1 Identification Data 3
2.2 Warranty / Contents 4

3. Safety

3.1 General Safety Information 5
3.2 Signal Words Explanation 5
3.3 Table of Warnings ..... 6 - 7
3.4 Operator's Qualifications Definition 8
3.5 Number of Operators 8
3.6 Safe Use of the Machine Instructions 8
3.7 Residual Hazards 8
3.8 Prevent Other Hazards - Recommendations and Measures 8
3.9 Personal Safety Measures 8
3.10 Incorrect / Predictable Actions Not Allowed 8
3.11 Operator's Required Skill Levels 9
3.12 Component Locations 10
3.13 Table of Warnings and Replacement Labels 11

4. Technical Specifications

4.1 Power Requirements 12
4.2 Operating Rate 12
4.3 Operating Conditions 12
4.4 Tape 12
4.5 Tape Width 12
4.6 Tape Roll Diameter 13
4.7 Tape Application Leg Length - Standard 13
Tape Application Leg Length - Optional
4.8 Box Board 13
4.9 Box Weight and Size Capacities 13
4.10 Machine Dimensions 14
4.11 Machine Noise Levels 14
4.12 Setup Recommendations 14

THIS PAGE IS BLANK

5. Shipment, Handling, and Storage

5.1 Packed Machine Shipment and Handling 15
5.2 Overseas Shipment Packaging (Optional) 15
5.3 Handling and Transportation of Uncrated Machine 15
5.4 Machine Storage 15

6. Unpacking

6.1 Uncrating 16
6.2 Packaging Materials Disposal 16

7. Installation

7.1 Operating Conditions 17
7.2 Space Requirements for Machine Operation and Maintenance 17
7.3 Tool Kit Supplied with the Machine 17
7.4 Machine Positioning 17
7.5 Plastic Ties Removal 18
7.6 Assembly Completion 18
7.7 Taping Heads Completion 19
7.8 Outboard Tape Roll Holder 19
7.9 Preliminary Electric Inspection 19
7.10 Main Power Machine Connection and Inspection 19
7.11 Phases Inspection 19

8. Theory of Operation

8.1 Working Cycle Description 20
8.2 Running Mode Definition 20
8.3.1 Normal Stop Procedure 20
8.3.2 Emergency Stop 20

9. Controls

9.1 Box Width Adjusting Knobs 21
9.2 Box Height Adjusting Crank 21
9.3 Start / Stop Main Switch 21
9.4 Emergency Stop Button (Latching) 21

10. Safety devices

10.1 Blade Guards 22
10.2 Emergency Stop Button 22
10.3 Electric System 22

11. Set-Up and Adjustments

11.1 Box Width Adjustment 23
11.2 Box Height Adjustment 23
11.3 Top Flap Compression Roller Adjustment 23
11.4 Changing the Tape Leg Length 23
11.5 Run Boxes to Check Adjustment 24

THIS PAGE IS BLANK

12. Operation

12.1 Operator's Correct Working Position 25
12.2 Starting the Machine 25
12.3 Starting Production 25
12.4 Tape Replacement 25
12.5 Box Size Adjustment 25
12.6 Cleaning 25
12.7 Table of Adjustments 25
12.8 Safety Devices Inspection 25
12.9 Troubleshooting ..... 26 - 28

13. Maintenance

13.1 Safety Measures (see section 3) 29
13.2 Tools and Spare Parts Supplied with Machine 29
13.3 Maintenance Operations - Recommended Inspections and Frequency 29
13.4 Inspections to be Performed Before and After Every Maintenance Operation 29
13.5 Safety Features (Inspection Efficiency) 29
13.6 Machine Cleaning 29
13.7 Cutter Blade Cleaning 29
13.8 Drive Belt Replacement 30
13.9 Drive Pulley Ring 31
13.10 Drive Belt Tension ..... 31 - 33
13.11 Maintenance Work Log 34

14. Additional Instructions

14.1 Machine Disposal Information 35
14.2 Fire emergency 35

15. Enclosures and Special Information

15.1 Statement of Conformity 35
15.2 Hazardous Substances Emission 35
15.3 Safety Features List 35
15.4 Copies of Test Reports, Certifications (etc.)Required by User 35

16. Technical Documentation and Information

16.1 Electric Diagrams 37
16.2 Spare Parts / Ordering ..... 39 - 41

Drawings and Parts Lists ..... 43 - End of Manual

TAPING HEAD INFORMATION -
MANUAL 2: AccuGlide™ 3 Taping Heads - 2 inch (See MANUAL 2 for Table of Contents)

LIST OF ABBREVIATIONS, ACRONYMS

3M-Matic	- Trademark of 3M St. Paul, MN 55144-1000
AccuGlide	- Trademark of 3M St. Paul, MN 55144-1000
Scotch	- Trademark of 3M St. Paul, MN 55144-1000
Drw.	- drawing
Ex.	- for example
Fig.	- exploded view figure no. (spare parts)
Figure	- Illustration
Max.	- maximum
Min.	- minimum
Nr.	- number
N/A	- not applicable
OFF	- machine not operating
ON	- machine operating
PLC	- Programmable Logic Control
PP	- Polypropylene
PU/PU Foam	- Polyurethane Foam
PTFE	- Polytetraflourethelene
PVC	- Poly-vinyl chloride
W	- Width
H	- Height
L	- Length

1.1 Manufacturing Specifications / Description / Intended Use

The **3M-Matic™ 200a Adjustable Case Sealer** with **AccuGlide™ 3** Taping Heads is designed to apply a “C” clip of **Scotch®** pressure-sensitive film box sealing tape to the top and bottom center seam of regular slotted containers. The **200a** is manually adjustable to a wide range of box sizes (see "Specifications Section – Box Weight and Size Capacities").

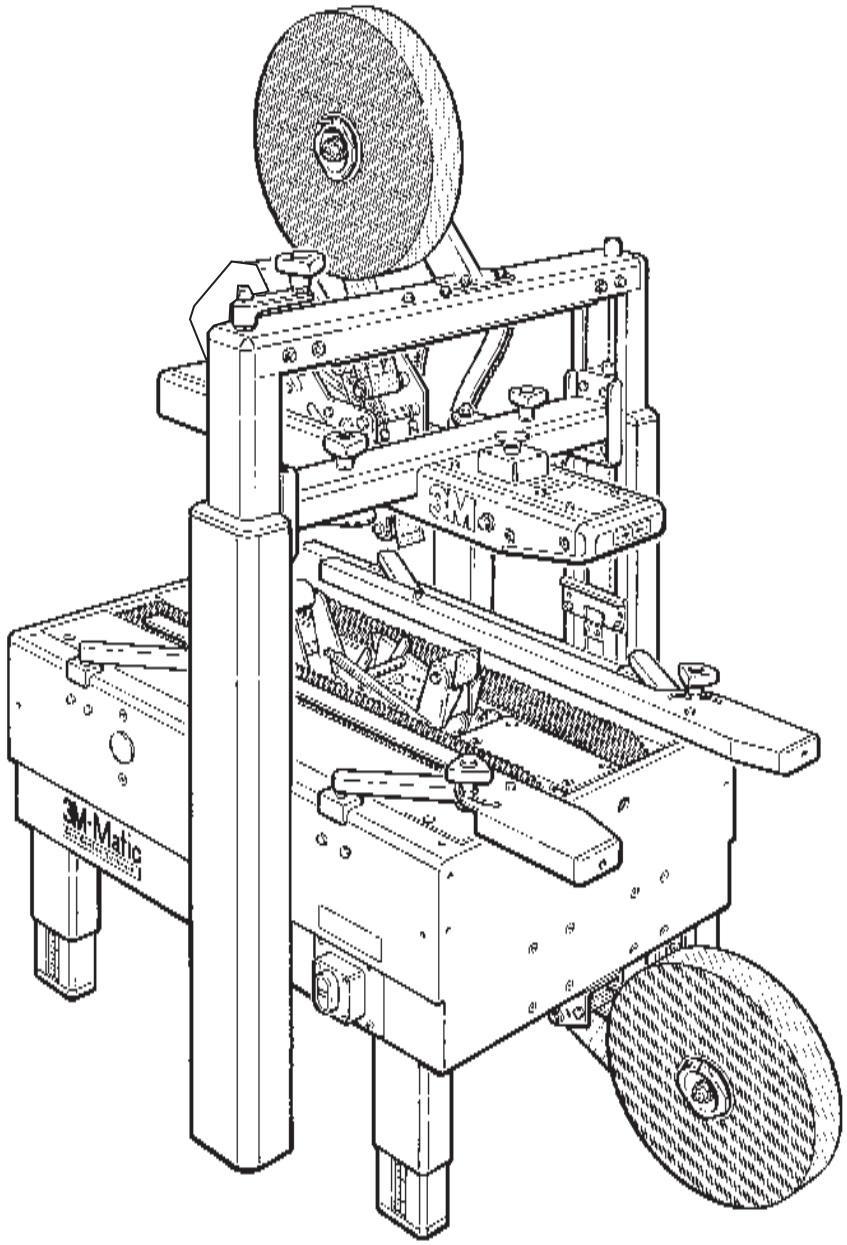

3M-Matic™ 200a Adjustable Case Sealer, Type 40800

Note – Shown above is the lower tape supply roll and bracket assembly in the alternate location.

1.1 Manufacturing Specifications / Description / Intended Use (continued)

The 3M-Matic™ case sealing machines have been designed in compliance with the legal requirements at the date of inception.

1.2 How to Read and Use the Instruction Manual

This instruction manual covers safety aspects, handling and transport, storage, unpacking, preparation, installation, operation, setup and adjustments, technical and manufacturing specifications, maintenance, troubleshooting, repair work and servicing, electric diagrams, warranty information, disposal (ELV), a definition of symbols, plus a parts list of the 3M-Matic™ **200a** Adjustable case sealer 3M Industrial Adhesives and Tapes Division 3M Center, Bldg. 220-5E-06 St. Paul, MN 55144-1000 (USA) Edition June 2011 Copyright 3M 2011 All rights reserved.
The manufacturer reserves the right to change the product at any time without notice.
Publication **© 3M 2011 44-0009-2072-6.**

1.2.1 Importance of the Manual

The manual is an important part of the machine; all information contained herein is intended to enable the equipment to be maintained in perfect condition and operated safely. Ensure that the manual is available to all operators of this equipment and is kept up to date with all subsequent amendments. Should the equipment be sold or disposed of, please ensure that the manual is passed on. Electrical and pneumatic diagrams are included in the manual. Equipment using PLC controls and/or electronic components will include relevant schematics or programs in the enclosure and in addition, the relevant documentation will be delivered separately.

1.2.2 Manual Maintenance

Keep the manual in a clean and dry place near the machine. Do not remove, tear, or rewrite parts of the manual for any reason. Use the manual without damaging it. In case the manual has been lost or damaged, ask your after sale service for a new copy.

1.2.3 Consulting the Manual

The manual is composed of:

- Pages which identify the document and the machine
- Index of the subjects
- Instructions and notes on the machine
- Enclosures, drawings and diagrams
- Spare parts (last section)

All pages and diagrams are numbered. The spare parts lists are identified by the figure identification number. All the notes on safety measures or possible dangers are identified by the symbol:

1.2.4 How to Update the Manual in Case of Modifications to the Machine

Modifications to the machine are subject to manufacturer's internal procedures. The user receives a complete and up-to-date copy of the manual together with the machine. Afterwards the user may receive pages or parts of the manual which contain amendments or improvements made after its first publication. The user must use them to update this manual.

2.1 Data Identifying Manufacturer and Machine

3M

3M Industrial Adhesives and Tapes

3M Center Bldg. 220-5E-06
St. Paul, MN 55144-1000 (USA)

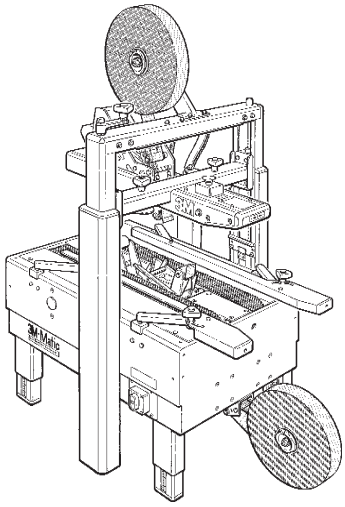

3M Company St. Paul, MN 55144 USA

Part Number

3M-Matic™

For Commecial Use Only

Model

Year

Ampere

Watt

Serial Number

Type

Volt

Hertz

Phase

2.2 Warranty

Equipment Warranty and Limited Remedy: THE FOLLOWING WARRANTY IS MADE IN LIEU OF ALL OTHER WARRANTIES, EXPRESS OR IMPLIED, INCLUDING, BUT NOT LIMITED TO, THE IMPLIED WARRANTY OF MERCHANTABILITY, THE IMPLIED WARRANTY OF FITNESS FOR A PARTICULAR PURPOSE AND ANY IMPLIED WARRANTY ARISING OUT OF A COURSE OF DEALING, A CUSTOM OR USAGE OF TRADE:

3M sells its **3M-Matic™ 200a Adjustable Case Sealer, Type 40800** with the following warranties:

1. The drive belts and the taping head knives, springs and rollers will be free from all defects for ninety (90) days after delivery.
2. All other taping head parts will be free from all defects for three (3) years after delivery.
3. All other parts will be free from all defects for two (2) years after delivery.

If any part is proved to be defective within its warranty period, then the exclusive remedy and 3M's and seller's sole obligation shall be, at 3M's option, to repair or replace the part, provided the defective part is returned immediately to 3M's factory or an authorized service station designated by 3M. A part will be presumed to have become defective after its warranty period unless the part is received or 3M is notified of the problem no later than five (5) calendar days after the warranty period. If 3M is unable to repair or replace the part within a reasonable time, then 3M at its option, will replace the equipment or refund the purchase price. 3M shall have no obligation to provide or pay for the labor required to install the repaired or replacement part. 3M shall have no obligation to repair or replace (1) those parts failing due to operator misuse, carelessness, or due to any accidental cause other than equipment failure, or (2) parts failing due to non-lubrication, inadequate cleaning, improper operating environment, improper utilities or operator error.

Limitation of Liability: 3M and seller shall not be liable for direct, indirect, special, incidental or consequential damages based upon breach of warranty, breach of contract, negligence, strict liability or any other legal theory.

The foregoing Equipment Warranty and Limited Remedy and Limitation of Liability may be changed only by a written agreement signed by authorized officers of 3M and seller.

Contents—200a Adjustable Case Sealer

(1) **200a** Adjustable Case Sealer, Type 40800
(1) Tool and Spare Parts Kit
(1) Instruction and Parts Manual

3.1 General Safety Information

Read all the instructions carefully before starting work with the machine; please pay particular attention to sections marked by the symbol: ⚠

Figure 3-1

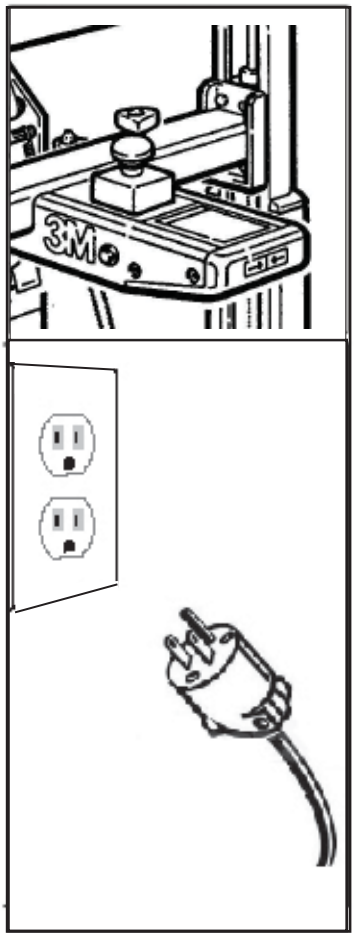

The machine is provided with a LATCHING EMERGENCY STOP BUTTON **(Figure 3-1)**; when this button is pressed, it stops the machine at any point in the working cycle. Maintain clear access to power cord while machine is operating. Disconnect plug from power source before machine maintenance **(Figure 3-1).** Also disconnect air if the machine has a pneumatic system. Keep this manual in a handy place near the machine. This manual contains information that will help you to maintain the machine in a good and safe working condition.

3.2 Explanation of Signal Word and Possible Consequences

⚠ This safety alert symbol identifies important messages in this manual. READ AND UNDERSTAND THEM BEFORE INSTALLING OR OPERATING THIS EQUIPMENT.

⚠ **CAUTION**: Indicates a potentially hazardous situation, which, if not avoided, may result in minor or moderate injury and/or property damage.

⚠ **WARNING:** Indicates a potentially hazardous situation, which, if not avoided, could result in death or serious injury and/or property damage.

3.3 Table of Warnings

WARNING

- **To reduce the risk associated with mechanical and electrical hazards:**
  - Read, understand, and follow all safety and operating instructions before operating or servicing the case sealer.
  - Allow only properly trained and qualified personnel to operate and service this equipment.

SAFETY INSTRUCTIONS

1. Shut off machine before adjusting
2. Unplug electric power before servicing
3. Do not leave machine running unattended
4. Refer to instruction manual for complete setup, operating, and servicing information

Figure 3-2

WARNING

- **To reduce the risk associated with hazardous voltage:**
  - Position electrical cord away from foot and vehicle traffic.

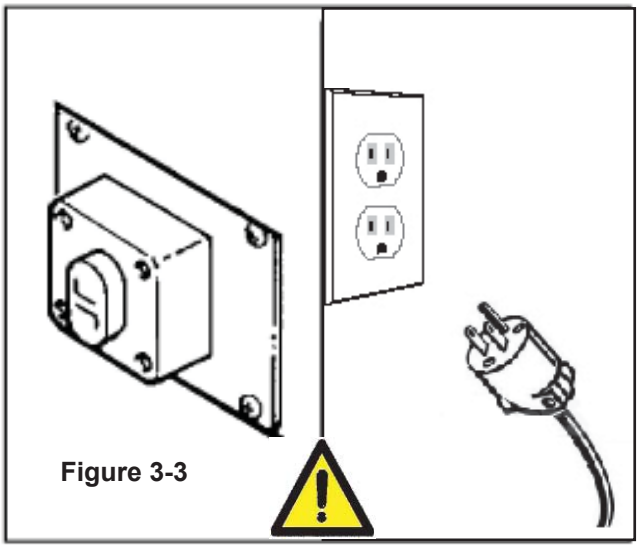

Figure 3-3

WARNING

- **To reduce the risk associated with pinches, entanglement and hazardous voltage:**
  - Turn electrical supply off and disconnect before performing any adjustments, maintenance or servicing the machine or taping heads.

WARNING

- **To reduce the risk associated with pinches and entanglement hazards:**
  - Do not leave the machine running while unattended.
  - Turn the machine off when not in use.
  - Never attempt to work on any part of the machine, load tape, or remove jammed boxes from the machine while the machine is running.

Figure 3-4

WARNING

- **To reduce the risk associated with sharp blade hazards:**
  - Keep hands and fingers away from tape cutoff blades under orange blade guards. The blades are extremely sharp.

Important! Tape cutting blade. Never remove the safety device which covers the blade on the top and bottom taping units. Blades are extremely sharp. Any error may cause serious injuries **(Figure 3-5).**

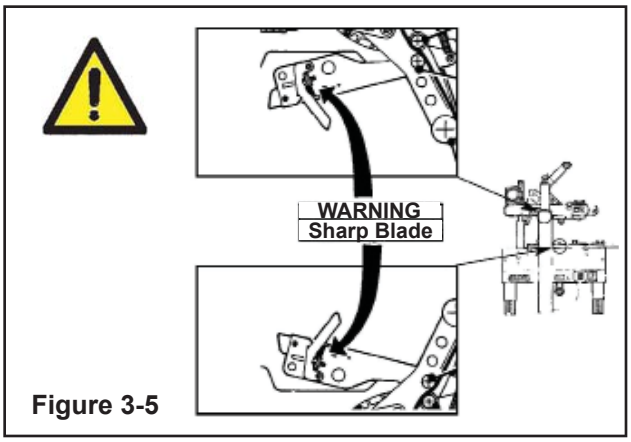

Figure 3-5

WARNING

- **To reduce the risk associated with fire and explosion hazards:**
  - Do not operate this equipment in potentially flammable/explosive environments.

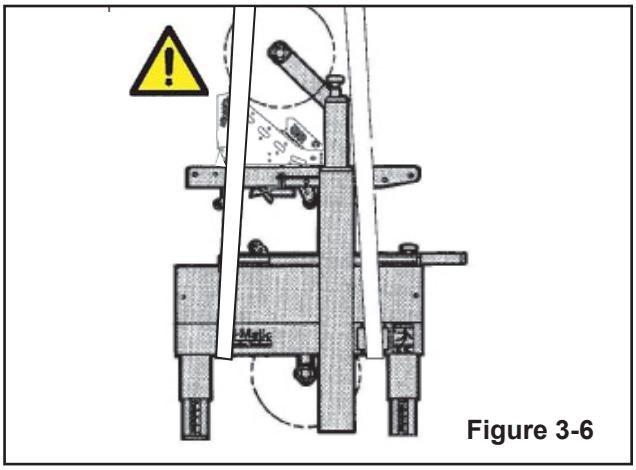

Figure 3-6

WARNING

- **To reduce the risk associated with muscle strain:**
  - Use the appropriate rigging and material handling equipment when lifting or repositioning this equipment.
  - Use proper body mechanics when removing or installing taping heads that are moderately heavy or may be considered awkward to lift.

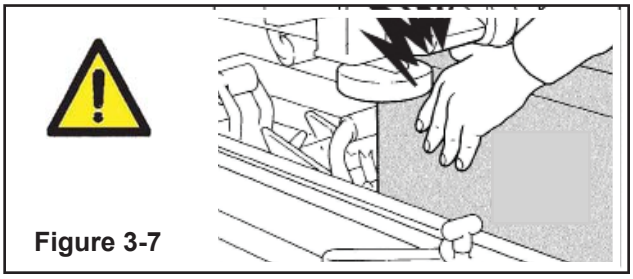

Figure 3-7

CAUTION

- **To reduce the risk associated with pinch hazards:**
  - Keep hands clear of the upper head support assembly as boxes are transported through the machine.
  - Keep hands, hair, loose clothing, and jewelry away from box compression rollers.
  - Always feed boxes into the machine by pushing only from the end of the box.
  - Keep hands, hair, loose clothing, jewelry away from moving belts and taping heads.

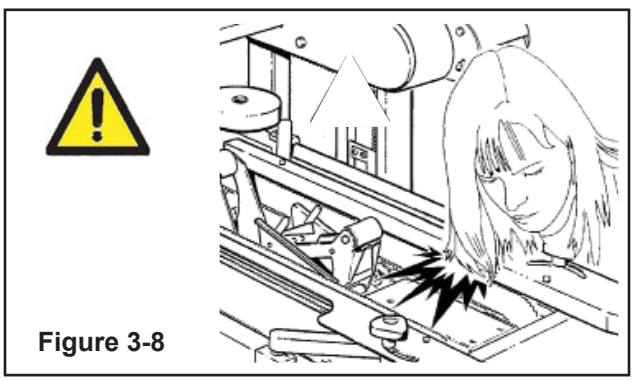

Figure 3-8

3.4 Operator's Qualifications

- Machine Operator
- Mechanical Maintenance Technician
- Electrical Maintenance Technician
- Manufacturer's Technician/Specialist

3.5 Number of Operators

The operations described below have been analyzed by the manufacturer; the recommended number of operators for each operation provides the best and safest work performance.

Note: A smaller or greater number of operators could be unsafe.

3.6 Instructions for a Safe Use of the Machine / Definition of Operator's Qualifications

Only persons who have the skills described in the skill levels section should be allowed to work on the machine. It is the responsibility of the user to appoint the operators having the appropriate skill level and the appropriate training for each category of job.

3.7 Residual Hazards

The case sealer **200a** incorporates various safety protections which should never be removed or disabled. It is essential that the operator and service personnel be warned that hazards exist which cannot be eliminated.

3.8 Recommendations and Measures to Prevent Other Hazards which Cannot be Eliminated

- The operator must stay on the working position shown in the Operation Section. He must never touch the running driving belts or put his hands inside any cavity.

- The operator must pay attention to the blades during the tape replacement.

WARNING

- **To reduce the risk associated with mechanical and electrical hazards:**
- Read, understand, and follow all safety and operating instructions before operating or servicing the case sealer.
- Allow only properly trained and qualified personnel to operate and service this equipment.

3.9 Personal Safety Measures

Safety glasses, safety gloves, safety helmet, safety shoes, air filters, ear muffs - None is required except when recommended by the user.

3.10 Predictable Actions which are Incorrect and Not Allowed

- Never try to stop/hold the box while being driven by the belts.

- Never remove or disable the safety devices.

- Only authorized personnel should be allowed to carry out the adjustments, repairs or maintenance which require operation with reduced safety protections. During such operations, access to the machine must be restricted. When the work is finished, the safety protections must immediately be reactivated.

- The cleaning and maintenance operations must be performed after disconnecting the electric power.

- Do not modify the machine or any part of it.

- Clean the machine using only dry cloths or light detergents. Do not use solvents, petrols, etc.

- Install the machine following the suggested layouts and drawings.

3.11 Operator's Skill Levels Required to Perform the Main Operations on the Machine

The Table shows the minimum operator's skill for each machine operation.

Important: The factory manager must ensure that the operator has been properly trained on all the machine functions before starting work.

Skill 1: Machine Operator
This operator is trained to use the machine with the machine controls, to feed cases into the machine, make adjustments for different case sizes, to change the tape and to start, stop and restart production.

Skill 2: Mechanical Maintenance Technician
This operator is trained to use the machine as the MACHINE OPERATOR and in addition is able to:
- Work with the safety protection disconnected
- Check and adjust mechanical parts
- Carry out machine maintenance operations/repairs

He is not allowed to work on live electrical components

Skill 2a: Electrical Maintenance Technician
This operator is trained to use the machine as the MACHINE OPERATOR and in addition is able to:
- Work with the safety protection disconnected
- Check and adjust mechanical parts
- Carry out machine maintenance operations / repairs / adjustments / repair electrical components

He is allowed to work on live electrical panels, connector blocks, control equipment, etc.

Skill 3: Specialist from the Manufacturer
Skilled operator sent by the manufacturer or its agent to perform complex repairs or modifications (on agreement with the customer).

WARNING

- **To reduce the risk associated with mechanical and electrical hazards:**
  - Allow only properly trained and qualified personnel to operate and service this equipment.

Operator's Skill Levels Required to Perform the Main Operations on Machine

Operation	Machine Status	Required Operator Skill	Number of Operators
Machine installation and setup	Running with safety protections disabled	2 and 2a	2
Adjusting box size	Stopped by pressing the EMERGENCY STOP button	1	1
Tape replacement	Stopped by pressing the EMERGENCY STOP button	1	1
Blade replacement	Electric power disconnected	2	1
Drive belt replacement	Electric power disconnected	2	1
Ordinary maintenance	Electric power disconnected	2	1
Extraordinary mechanical maintenance	Running with safety protections disabled	3	1
Extraordinary electrical maintenance	Running with safety protections disabled	2a	1

3.12 Component Locations

Refer to **Figure 3-9** below to acquaint yourself with the various components and controls of the case sealer. Also refer to Manual 2 for taping head components.

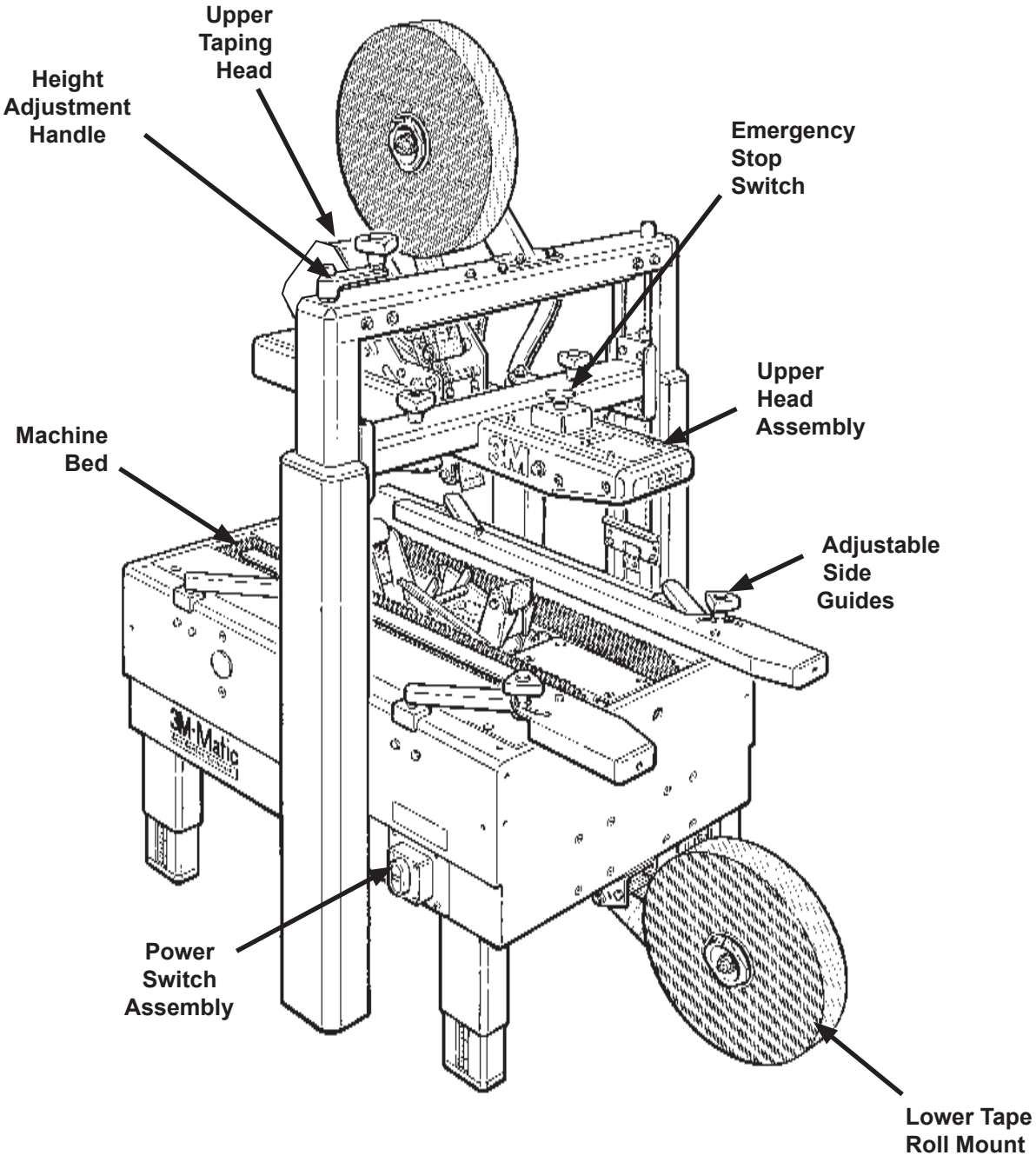

Figure 3-9—200a Case Sealer Components (Left Front View)

3.13 Table of Warnings and Replacements Labels (continued)

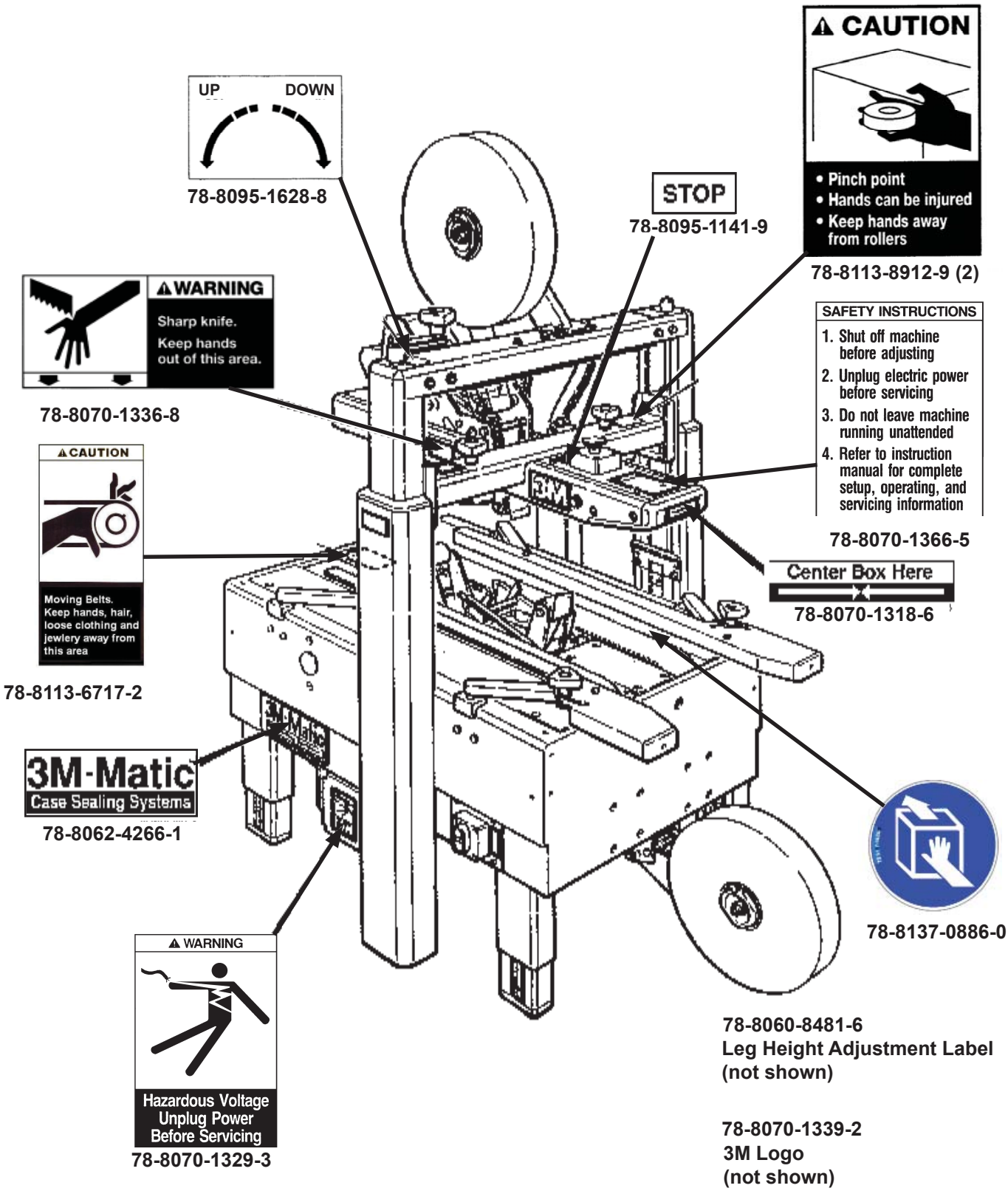

Figure 3-10 - Replacement Labels / 3M Part Numbers

4.1 Power Requirements

Electrical: 115 Volt, 60Hz, 1.9 A (220 watts)

The machine is equipped with a 2.4m [8 foot] standard neoprene covered power cord and a grounded plug. Contact your 3M Representative for power requirements not listed above.

4.2 Operating Rate

Box drive belt speed is approximately 0.5 m/s [100 feet per minute].

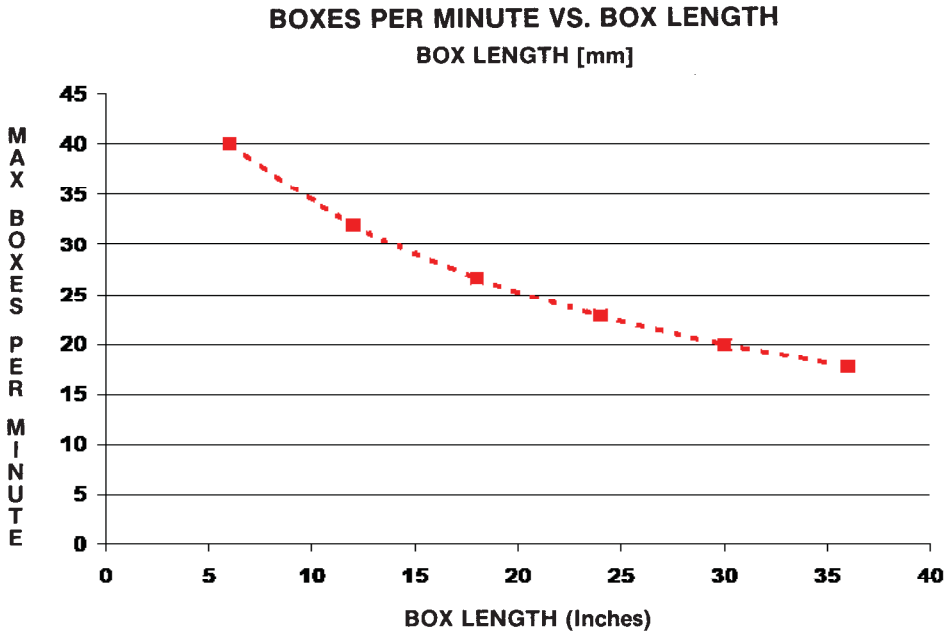

Actual production rate is dependent on operator's dexterity.
Boxes must be 18 inches [455mm] apart minimum.

4.3 Operating Conditions

Use in dry, relatively clean environments at 5° C to 50° C [40° F to 120° F] with clean, dry boxes.

Note: Machine should not be washed or subjected to conditions causing moisture condensation on components.

WARNING

- **To reduce the risk associated with fire and explosion hazards:**
  - Do not operate this equipment in potentially flammable or explosive environments.

4.4 Tape

Scotch® pressure-sensitive film box sealing tapes.

4.5 Tape Width

36mm [1 1/2 inch] minimum to 48mm [2 inch] maximum

Specifications

4.6 Tape Roll Diameter

Up to 405mm [16 inch] maximum on a 76mm [3 inch] diameter core.

(Accommodates all system roll lengths of **Scotch®** film tapes.)

4.7 Tape Application Leg Length – Standard

70 mm ± 6mm [2.75 inch ±. 25 inch]

Tape Application Leg Length – Optional
50 mm ± 6mm [2 inch ±. 25 inch]
(See "Removing Taping Heads Procedure – Changing the Tape Leg Length")

4.8 Box Board

Style – regular slotted containers – RSC
125 to 275 P.S.I. bursting test, single wall or double wall B or C flute.
23-44 lbs. per inch of width Edge Crush Test (ECT)

4.9 Box Weight and Size Capacities

A. Box Weight, filled: 5 lbs.–65 lbs. [2.3 kg–29.5 kg]. Contents must support flaps.

B. Box Size:

	Minimum	**Maximum**
Length –	150mm [6.0 inch]	Unlimited
Width –	150mm [6.0 inch]*	550mm [21.5 inch]
Height –	120mm [4.75 inch]** ***	620mm [24.5 inch] ***

* Cartons narrower than 250mm [10 inch] in width may require more frequent belt replacement because of limited contact area.

** 90mm [3.5 inch] height with heads adjusted to apply 50mm [2 inch] tape leg lengths. (See "Special Setup Procedure—Changing the Tape Leg Length".)

*** 165mm [6.5 inches] minimum to 725mm [28.5 inches] maximum height with columns adjusted to upper position. (See "Special Setup Procedure – Box and Machine Bed Height Range".)

Note: The case sealer can accommodate most boxes within the size range listed above. However, if the box length (in direction of seal) to box height ratio is 0.6 or less, test run several boxes to ensure proper machine performance.

DETERMINE THE BOX LIMITATIONS BY COMPLETING THIS FORMULA:

$$\frac{\textbf{BOX LENGTH IN DIRECTION OF SEAL}}{\textbf{BOX HEIGHT}} = \textbf{SHOULD BE GREATER THAN 0.6}$$

Any box ratio approaching this limitation should be test run to ensure performance.

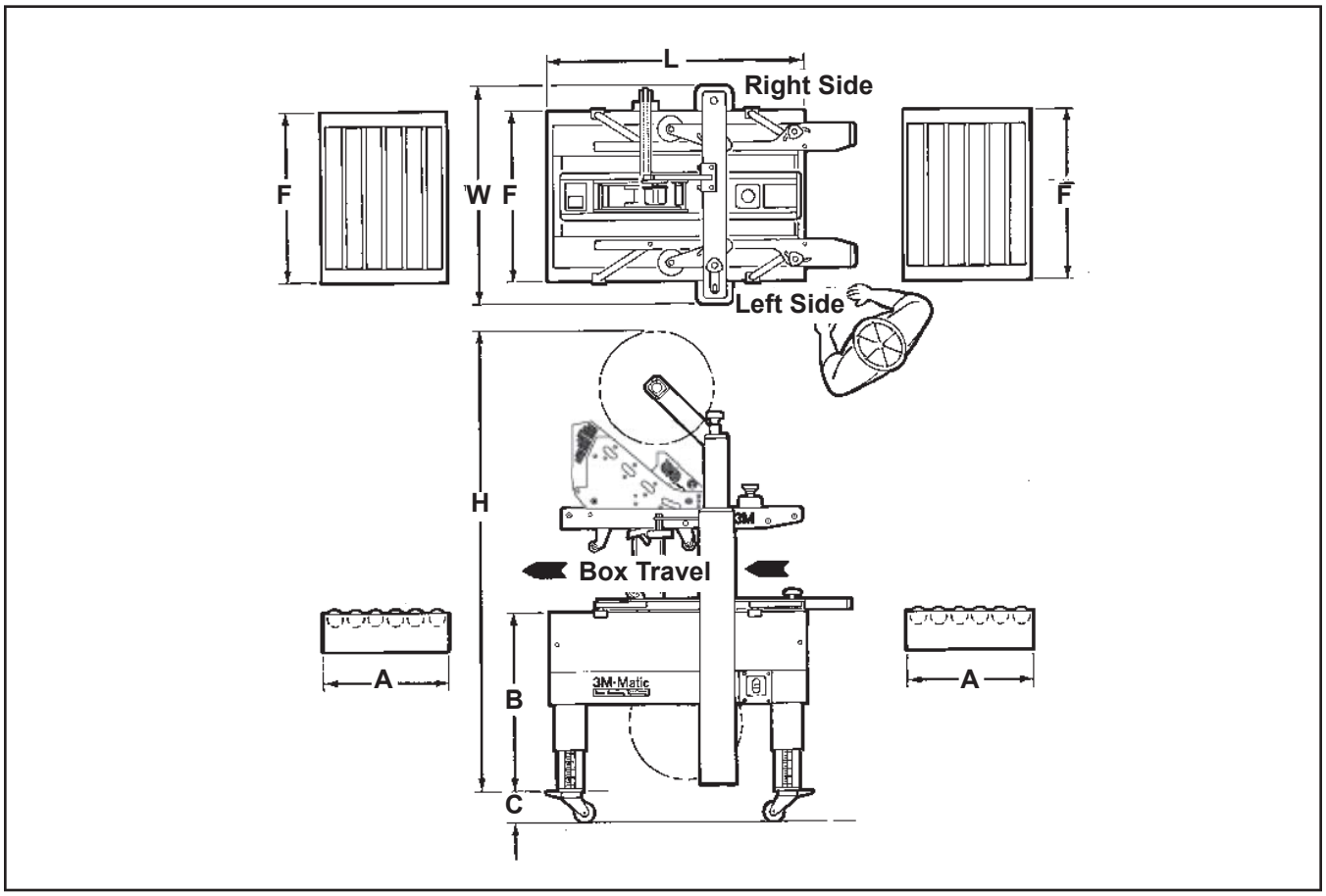

4.10 Machine Dimensions

	W	L	H	A*	B	C**	F
Minimum							
mm	790	930	1350	460	610	100	620
[Inches]	[31]	[36 1/2]	[53]	[18]	[24***]	[4]	[24 1/2]
Maximum							
mm			2185		890		
[Inches]	- -	- -	[86***]	- -	[35***]	- -	- -

* Infeed/Exit conveyors are optional

** Casters are optional

*** When columns are adjusted to upper position, "B" minimum/maximum dimension decreases by 90 mm [3 1/2 inches] and "H" maximum dimension increases by 100 mm [4 inch]. (See "Special Setup Procedure – Box and Machine Bed Height Range".)

Weight – 145.6 kg [320 lbs] crated (approximate)
123.4 kg [280 lbs] uncrated (approximate)

4.11 Machine Noise Level: Acoustic pressure measured at a distance of 1m. from machine with Scotch PVC adhesive tape in operation; 78dB Acoustic radiation pressure at 1.6m. height with Scotch PVC adhesive tape in operation; 73dB Measurement taken with appropriate instrument: (Type SPYRI-MICROPHON 11).

4.12 Setup Recommendations:

- Machine must be level.
- Customer supplied infeed and exit conveyors (if used) should provide straight and level box entry and exit.
- Exit conveyors (powered or gravity) must convey sealed boxes away from machine.

5.1 Shipment and Handling of Packed Machine

- The machine is fixed on the pallet with four (4) bolts and can be lifted by using a fork truck.
- The package is suitable to travel by land and by air.
- Optional sea freight package is available.

Packaging Overall Dimensions (Figure 5-1)

See Specifications.

During the shipment it is possible to stack a maximum of 2 machines **(Figure 5-2).**

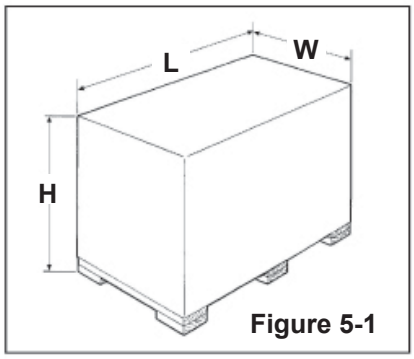

Figure 5-1

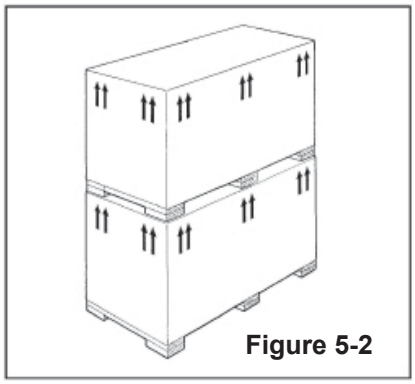
Figure 5-2

5.2 Packaging for Overseas Shipment (Optional - Figure 5-3)

The machines shipped by sea freight are covered by an aluminum/polyester/polythene bag which contains dehydrating salts.

5.3 Handling and Transportation of Uncrated Machine

The uncrated machine should not be moved except for short distances and indoors ONLY. Without the supporting pallet, the machine is exposed to damage and may cause injuries. To move the machine use belts or ropes, paying attention to place them in the points indicated using care to not interfere with the lower taping head **(Figure 5-4).**

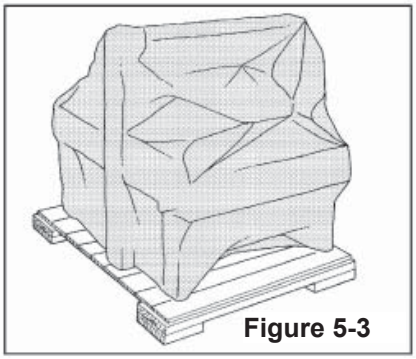
Figure 5-3

5.4 Storage of the Packed or Unpacked Machine

If the machine is not used for a long period, please take the following precautions:

- Store the machine in a dry and clean place.
- If the machine is unpacked it is necessary to protect it from dust.
- Do not stack anything over the machine.
- It is possible to stack a maximum of 2 machines (if they are in their original packing).

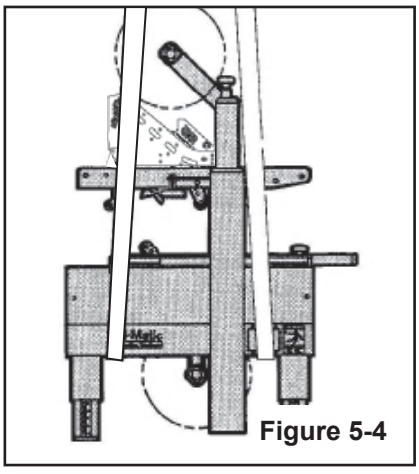
Figure 5-4

6.1 Uncrating

The envelope attached to the shipping box contains the uncrating instructions of the machine **(Figure 6-1).**

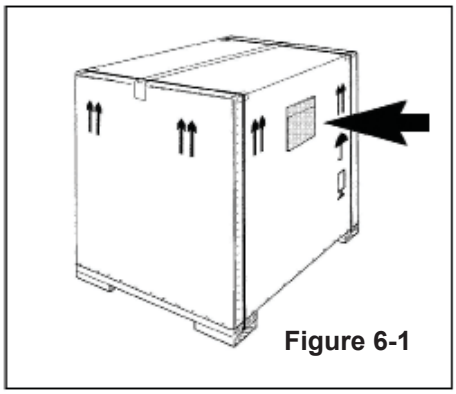

Figure 6-1

Cut straps. Cut out staple positions along the bottom of the shipping box (or remove staples with an appropriate tool **- Figure 6-2)**

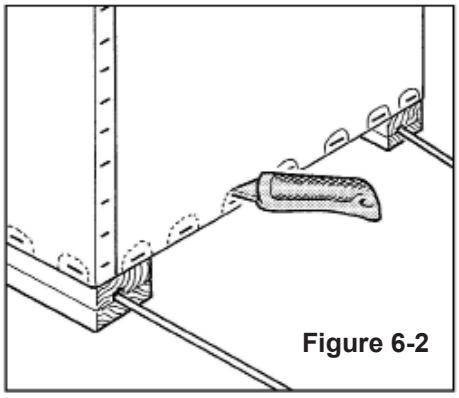

Figure 6-2

After cutting out or removing the staples, lift the shipping box in order to clear the machine (two persons required).

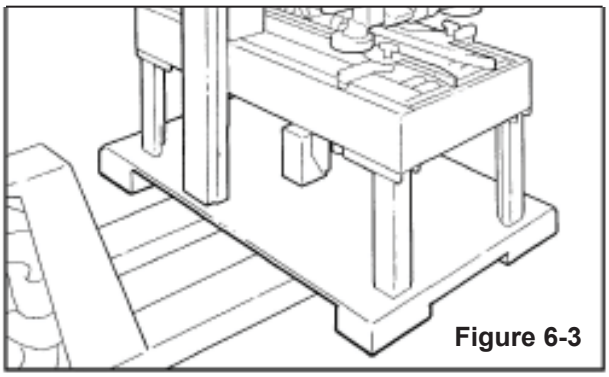

Figure 6-3

Transport the machine with a fork-lift truck to the operating position. Lift the pallet at the point indicated in **Figure 6-3.**
(weight of machine + pallet = **See Specifications**).

Removal of Pallet

Using a 10mm combination wrench, remove the fasteners that secure the case sealer legs to pallet at each leg (as shown in **Figure 6-4).**

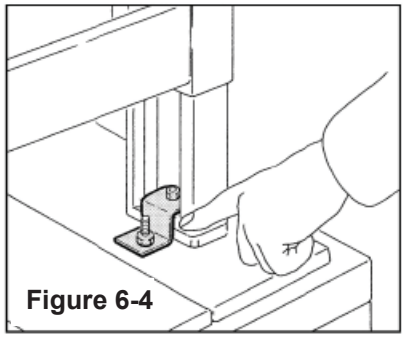

Figure 6-4

A package is located under the machine body. Retrieve the instruction manual for additional procedures of the set up. The package also contains parts removed for shipping, spare parts and tools **(Figure 6-5).**

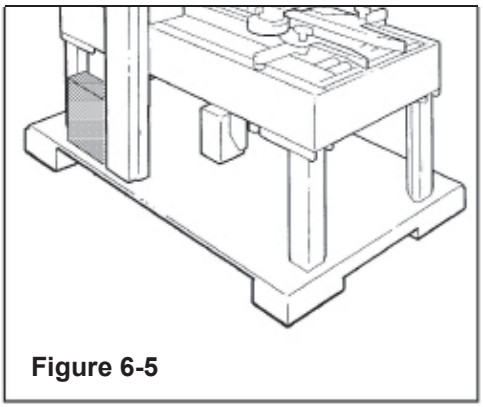

Figure 6-5

6.2 Disposal of Packaging Materials

The **200a** package is composed of:

- Wooden pallet
- Cardboard shipping box
- Wooden supports
- Metal fixing brackets
- PU foam protection
- PP plastic straps
- Dehydrating salts in bag
- Special bag of laminated polyester/aluminium/ Polyethylene (sea freight package only)
- Polyethylene protective material

For the disposal of the above materials, please follow the environmental directives or the law in your country.

7.1 Operating Conditions

The machine should operate in a dry and relatively clean environment (See Specifications).

7.2 Space Requirements for Machine Operation and Maintenance Work

Minimum distance from wall **(Figure 7-1)**:

A = 1000mm.
B = 700mm.
Minimum height = 2700mm.

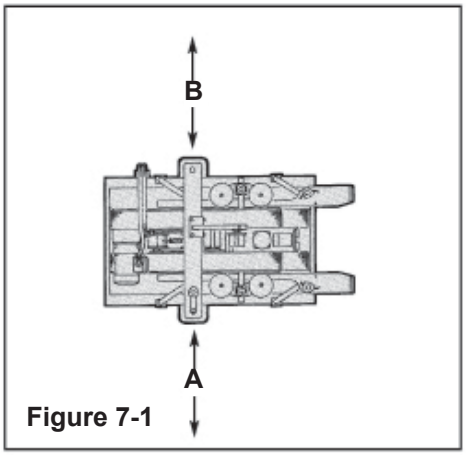

Figure 7-1

7.3 Tool Kit Supplied with the Machine

A tool kit containing some tools are supplied with the machine. These tools should be adequate to Setup the machine, however, other tools supplied by the customer will be required for machine maintenance.

WARNING

- **To reduce the risk associated with mechanical and electrical hazards:**
  - Allow only properly trained and qualified personnel to operate and service this equipment.

WARNING

- **To reduce the risk associated with muscle strain:**
  - Use the appropriate rigging and material handling equipment when lifting or repositioning this equipment.
  - Use proper body mechanics when removing or installing taping heads that are moderately heavy or may be considered awkward to lift.

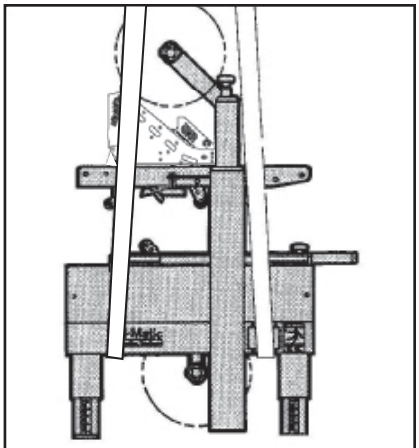

Figure 7-2

7.4 Machine Setup / Bed Height

Adjust machine bed height. The case sealer is equipped with four (4) adjustable legs that are located at the corners of the machine frame. The legs can be adjusted to obtain different machine bed heights (See Specifications).

Refer to **Figure 7-3** and set the machine bed height as follows:

1. Raise and block up the machine frame to allow adequate leg adjustment.
2. Loosen, but do not remove, two (2) M8 x 1.25 socket head screws in one leg (use M6 hex wrench). Adjust the leg length for the desired machine bed height. Retighten the two screws to secure the leg. Adjust all four (4) legs equally.

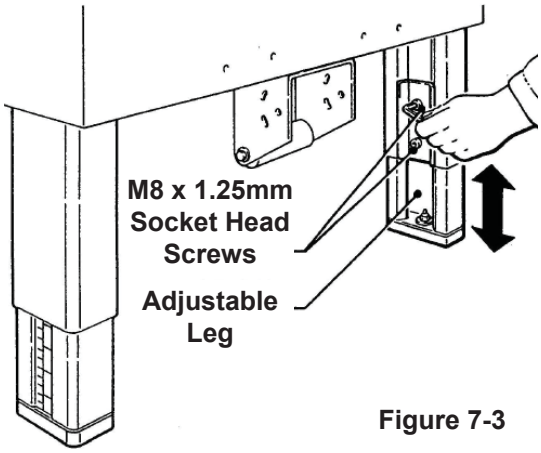

Figure 7-3

7.5 Removal of Plastic Ties

Cut the plastic which attaches the top head to the frame and remove the polystyrene blocks **(Figure 7-4).**

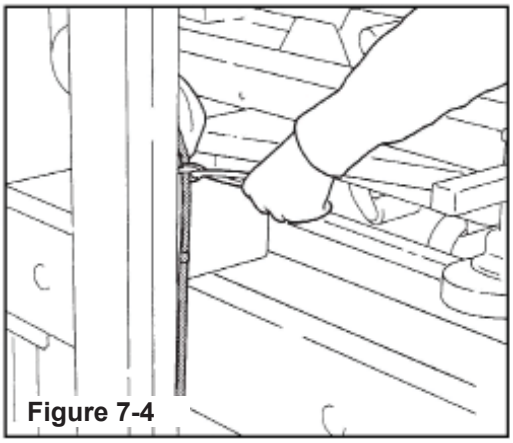

Figure 7-4

Cut the plastic strap which attaches the strip and the EMERGENCY STOP cable to the frame **(Figure 7-5).**

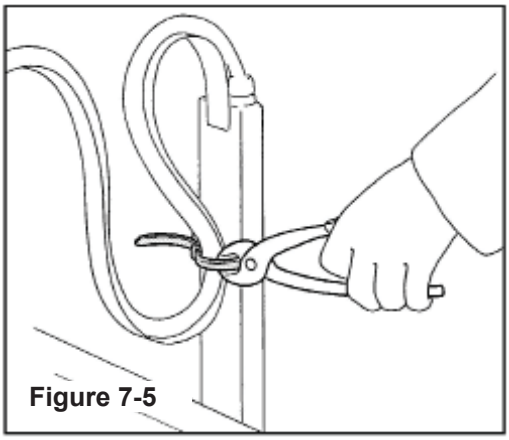

Figure 7-5

Cut the plastic ties holding the lower taping head in position **(Figure 7-6).**

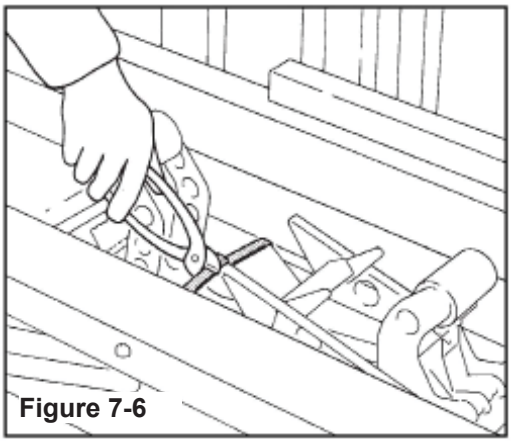

Figure 7-6

7.6 Assembly Completion

1 Crank - Install the crank handle on the top of the left column as shown **(Figure 7-7B).**
2 Tape Drum Bracket - Install the upper tape drum bracket on the top cross bar as shown **(Figure 7-7A).**
3 Stop Bracket - Raise upper head assembly (turn crank handle counterclockwise) and install the two stop brackets (provided in the parts bag). Use lower set of holes as shown in **Figure 7-7D.** The upper set of holes should only be used when both taping heads are adjusted to apply 50mm tape legs.

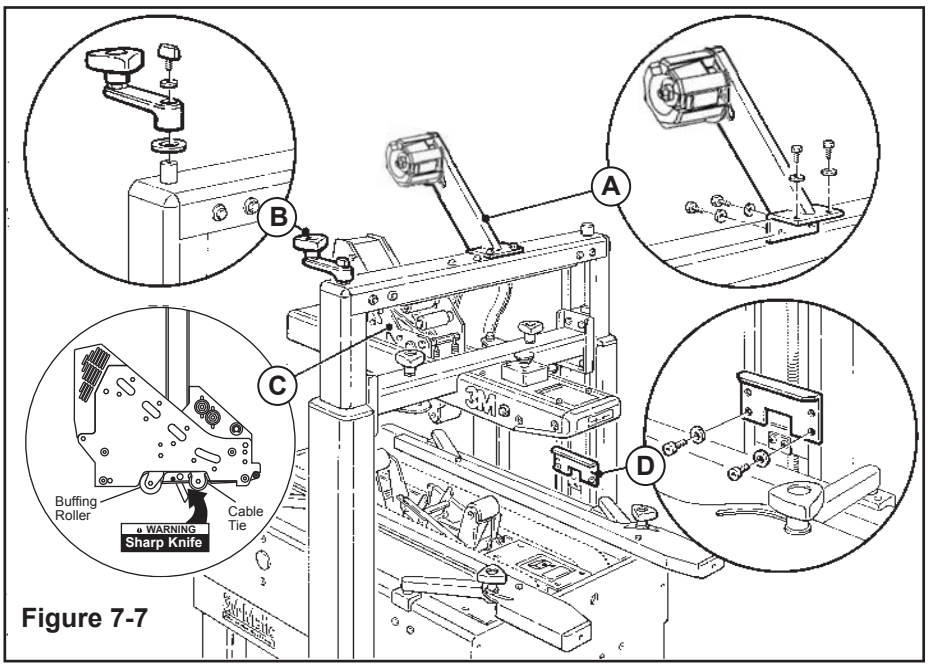

Figure 7-7

7.7 Completion of Taping Heads

See Manual 2 for Complete Instructions:

Important – Do not cut against the apply roller - roller damage could occur.

7.8 Outboard Tape Roll Holder

If you intend to use the outboard tape roll holder, proceed as follows:

1 - Remove the lower taping head from the machine.
2 - Remove the tape drum bracket assembly, stud spacer, and fasteners from the lower taping head.
3 - Install alternative wrap roller and bracket on the head in place of tape bracket. Replace lower head into machine.
4 - Install and secure tape drum bracket assembly on the entry end of the lower frame (as shown in **Figure 7-8).**

7.9 Preliminary Electric Inspection

Before connecting the machine to the mains please carry out the following operations:

7.9.1 Make sure that the socket is provided with an earth protection circuit and that both the mains voltage and the frequency match the specifications on the name plate.

7.9.2 Check that the connection of the machine to the mains meets the safety regulations in your country.

7.9.3 The machine is fitted with a main switch. The user will be responsible for testing the short-circuit current in its facility and should check that the short-circuit amperage setting of the machine is compatible with all the components of the mains system.

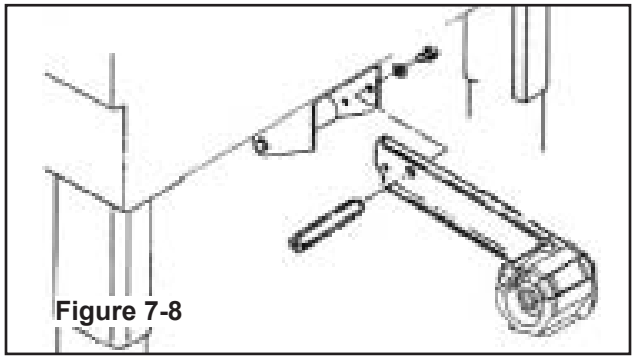

Figure 7-8

7.10 Machine Connection to the Mains

- Push the LATCHING EMERGENCY STOP BUTTON.

- The main switch is normally turned OFF (O).

Connect the power cord supplied with the machine to a wall socket using a plug which complies with the safety regulations of your country.

7.11 Inspection of Phases (For Three-Main Phases Only)

N/A for this machine.

8.1 Description of the Working Cycle

After having closed the top flaps of the carton, the operator pushes it under the top infeed end in order to avoid the opening of the top flaps. Further pushing causes the two top and bottom belts to drive the box through the taping heads which automatically seal the top and bottom seams. The carton is then expelled on the exit conveyor.

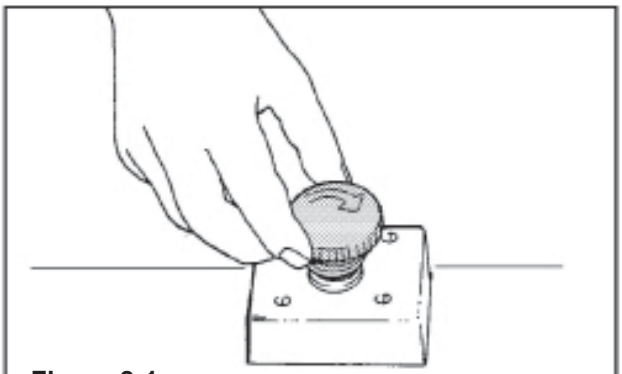

Figure 8-1

8.2 Definition of Running Mode

The case sealer **200a** has only one (automatic) operating mode with:

- The EMERGENCY STOP BUTTON unlocked **(Figure 8-1)**
- The main switch start switch “ON” (I) **(Figure 8-2)**

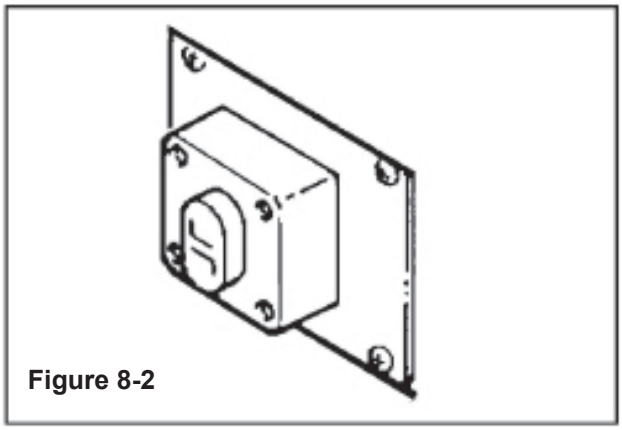

Figure 8-2

8.3.1 Normal Stop Procedure

When the main switch is turned OFF (O), the machine stops immediately at any point of the working cycle. The same thing happens in case of electrical failure or when the machine is disconnected from the mains.

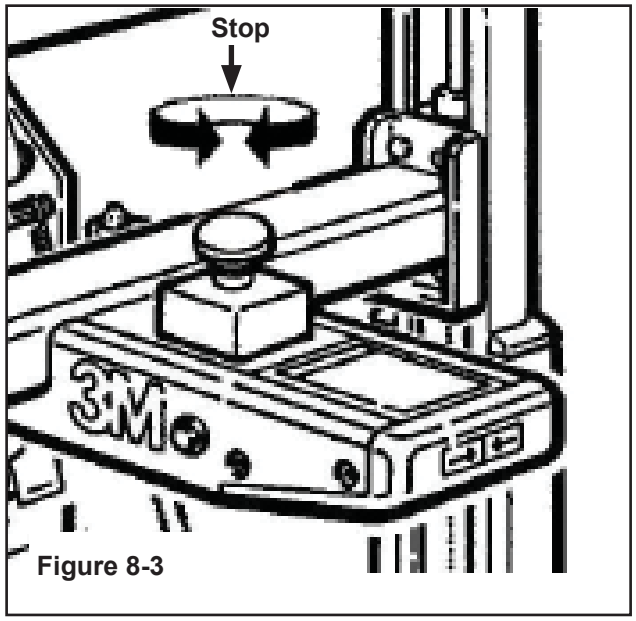

Figure 8-3

8.3.2 Emergency Stop

The LATCHING EMERGENCY STOP BUTTON is located on the top center of the machine **(Figure 8-1).**

9.1 Box Width Adjusting Knobs

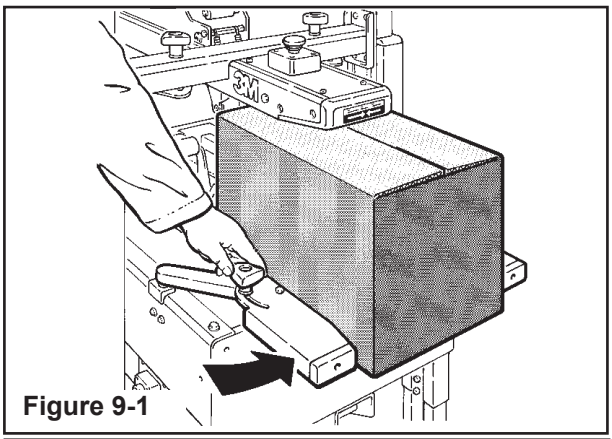

Figure 9-1

9.2 Box Height Adjusting Crank

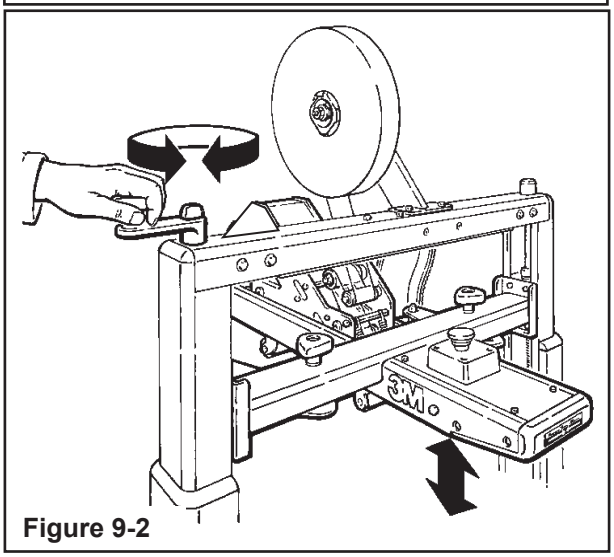

Figure 9-2

9.3 Start/Stop Buttons

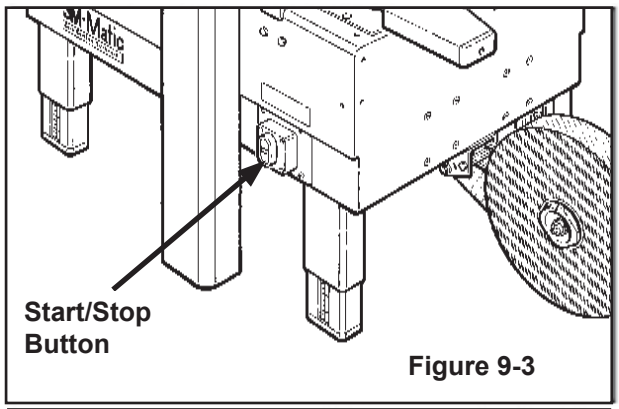

Figure 9-3

9.4 Lockable Emergency Stop Button

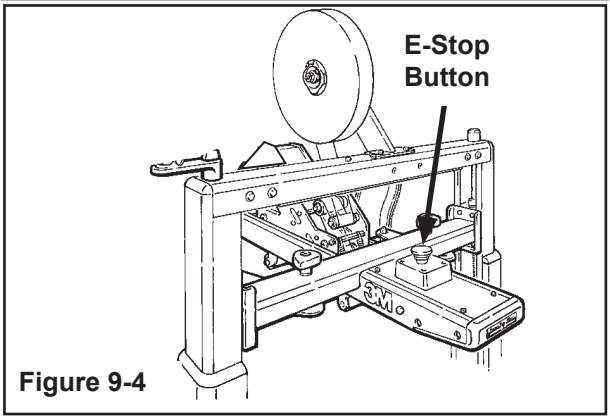

Figure 9-4

10.1 Blade Guards

Both the top and bottom taping units have a blade guard (See Manual 2: **AccuGlide™ 3 - 2 Inch Taping Heads**).

Important!
Use care when working near blades as blades are extremely sharp. If care is not taken, severe injury to personnel could result.

10.2 Emergency Stop Button

The box drive belts are turned on and off with the electrical switch on the side of the machine frame.

The machine electrical supply can be turned off by pressing the latching emergency stop switch. To restart machine, rotate the emergency stop switch clockwise to release the switch latch. Restart machine by pushing the Start button **(Figure 10-1).**

Important!
All adjustments and tape loading require that the machine is stopped and the emergency stop button is locked.

Main electric switch "OFF" (O). Severe injury to personnel could result by lack of observing these elementary rules.

WARNING

- **To reduce the risk associated with hazardous voltage:**
  - Position electrical cord away from foot and vehicle traffic.

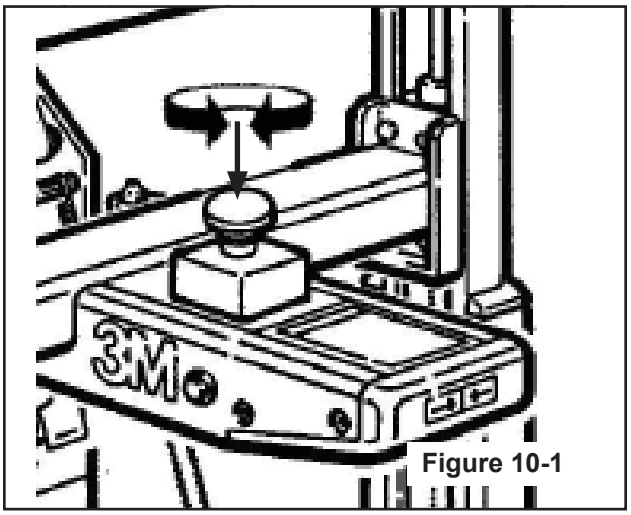

Figure 10-1

10.3 Electric System / Circuit Breaker

The electric system is protected by a ground wire whose continuity has been tested during the final inspection. The system is also subject to insulation and dielectric strength tests.

Circuit Breaker

The case sealer is equipped with a circuit breaker which trips if the motors are overloaded. Located inside the electrical enclosure on the side of the machine frame just below the machine bed, the circuit breaker has been pre-set and requires no further maintenance.

WARNING

- **To reduce the risk associated with mechanical and electrical hazards:**
  - Allow only properly trained and qualified personnel to operate and service this equipment.

If circuit is overloaded and circuit breaker trips, unplug machine from electrical power:

1. Determine cause of overload and correct.
2. Plug in machine.
3. Press machine "On" (I) button to resume case sealing.

Important: The use of an extension cord is not recommended. However, if one is needed for temporary use, it must:

- Have a wire size of 1.5mm diameter [AWG 16]
- Have a maximum length of 30.5m [100 ft]
- Be properly grounded.

11.1 Box Width Adjustment

Place box on infeed end of frame bed and align top flap center seam with arrows on front of upper frame. Move in and lock the side by tightening the appropriate knobs **(Figure 11-1).**

11.2 Box Height Adjustment

Lower top head by turning the height adjustment crank clockwise until it lightly presses the case **(Figure 11-2).**

11.3 Adjustment of Top Flap Compression Rollers

Run the box through the machine and press the EMERGENCY STOP BUTTON when the box is adjacent to the compression rollers. Move the compression rollers in to firmly press the top flaps together. Release Emergency Stop Button and press electrical ON (I) button **(Figure 11-3).**

11.4 Changing the Tape Leg Length

Taping heads are preset to apply 70mm [2.75 inches] long tape legs. To change tape leg length to 50mm [2.0 inches], refer to Instructions below and also to Manual 2, "Removing Taping Heads Procedure - Changing the Tape Leg Length".

Case Sealer Frame (Refer to **Figure 11-4A**)

1. Raise the upper head assembly by turning crank handle. Remove and retain the two screws and washers that secure the stop bracket in position "A".
2. Remount and secure the stop bracket in the lower position "A-A" with original fasteners through top holes of stop bracket. Relocate both right and left stop brackets.

WARNING

- **To reduce the risk associated with sharp blade hazards:**
  - Keep hands and fingers away from tape cutoff blades under orange blade guards. The blades are extremely sharp.

Taping Heads

1. Remove tape from upper taping head and raise upper assembly to a convenient working height.
2. Lift retaining plate that secures the upper taping head shown in **Figure 11-4B**.
3. Hold upper taping head applying and buffing arms from under upper assembly, slide head forward and down to remove (**See Figure 11-6).**
4. Raise upper assembly to provide working room around lower taping head and remove tape from taping head.
5. Lift the lower taping head, shown in **Figure 11-5 and 11-4C**, straight up to remove it from the case sealer bed.
6. Also refer to Manual 2, "Adjustments "

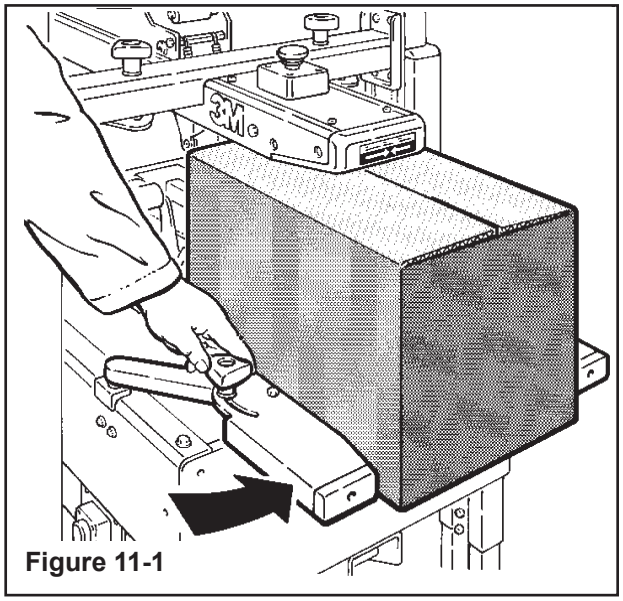

Figure 11-1

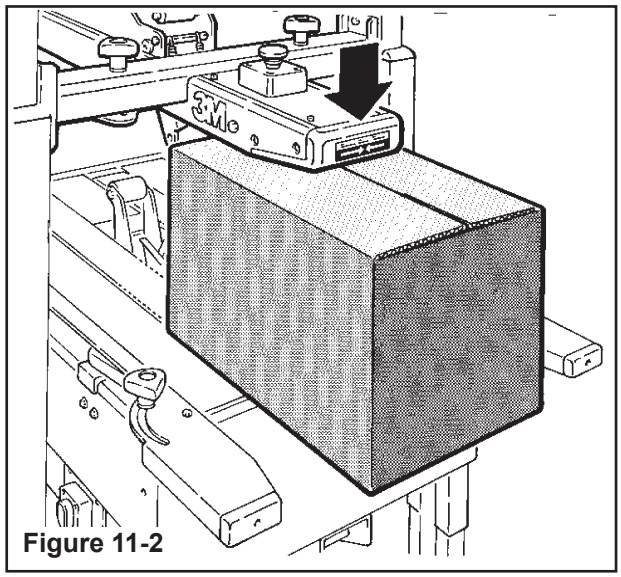

Figure 11-2

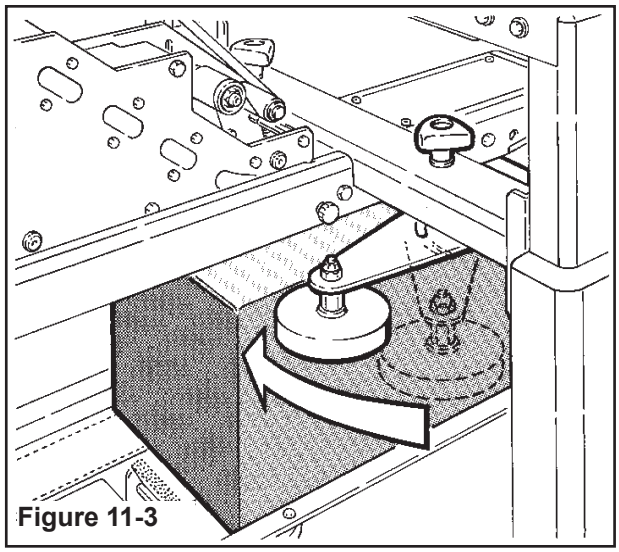

Figure 11-3

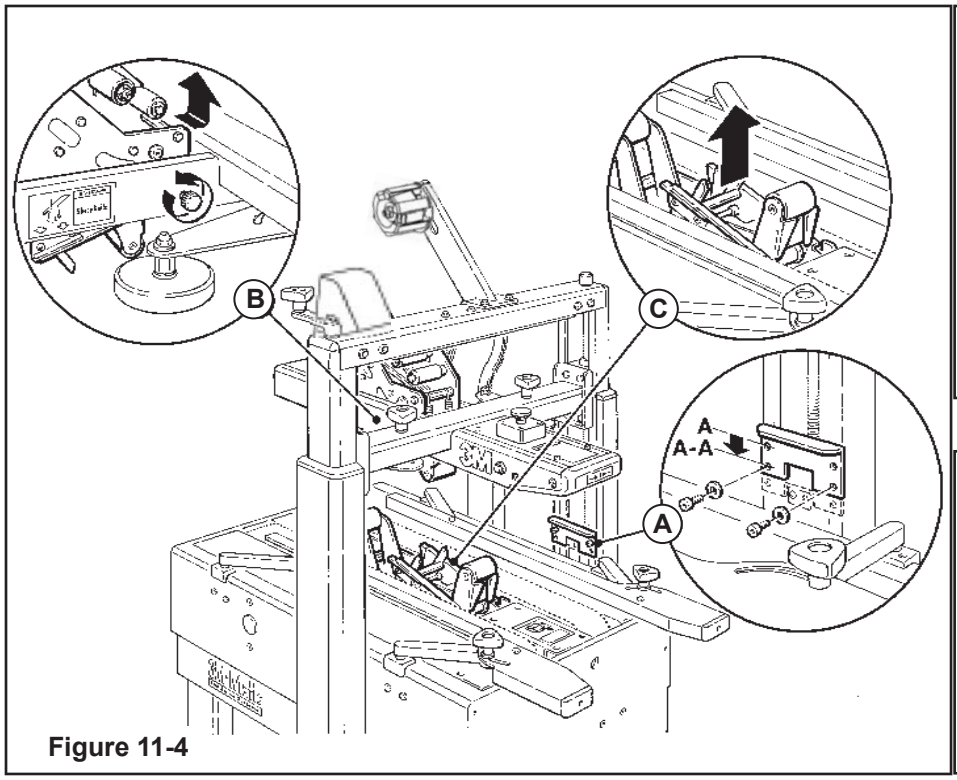

Figure 11-4

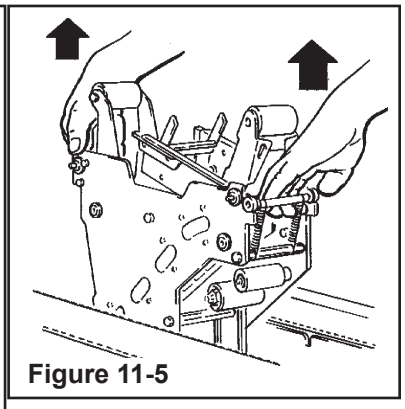

Figure 11-5

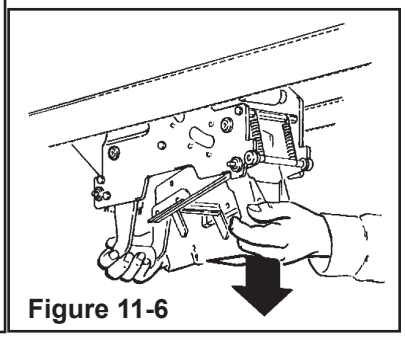

Figure 11-6

11.5 Special Set-up Procedure for Outer Column Re-Positioning

Moving the outer columns up one set of mounting holes increases the maximum box height handled by the **200a** case sealer and decreases the minimum conveyor bed height.

1 - Place solid blocks approx. 305mm high at the front and rear of the upper taping head assembly as shown in **Figure 11-7A**.
2 - Crank the upper taping head assembly down until it touches these blocks.
3 - Remove and retain the six screws and plain washers that fasten each column to the frame **(Figure 11-7B).**
4 - Turn the height adjustment crank clockwise to raise the outer columns up one set of mounting holes (100mm).
5 - Install and tighten the six (6) screws and plain washers in each column. Crank upper taping head assembly up and remove blocks.

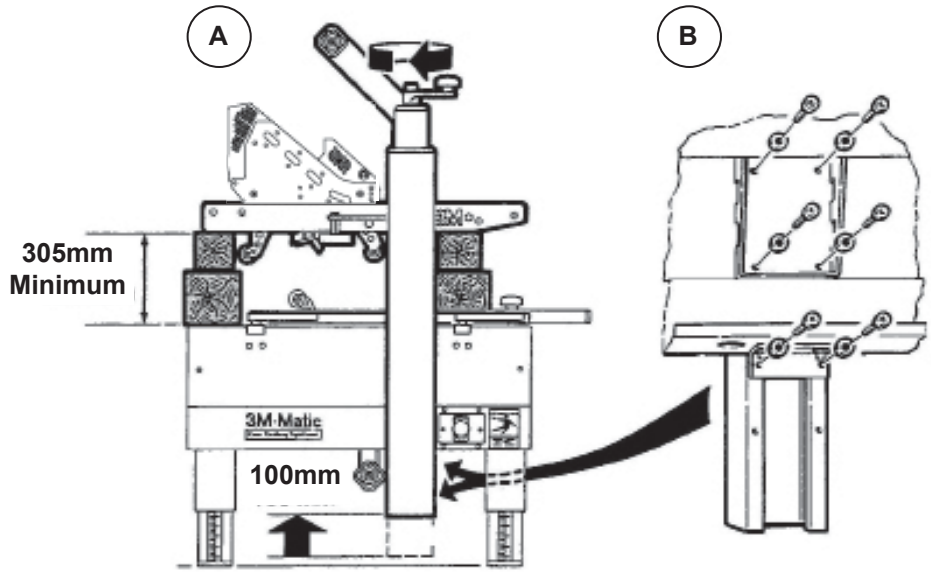

Figure 11-7

12.1 Operator's Correct Working Position and Operational Flow (Figure 12-1).

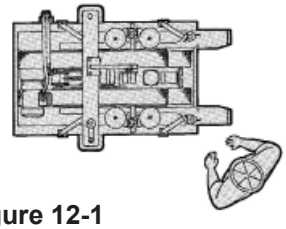

Figure 12-1

Once the box has been filled, close its top flaps and push it between the top and bottom drive belts. Always keep hands in position as shown in **Figure 12-2.**

The box will be automatically sealed with adhesive tape on the top and bottom box seams. Then the box will be expelled on the exit conveyor.

Figure 12-2

Hand Position

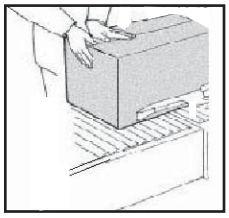

12.2 Starting the Machine

Important: Before starting the machine, verify that no tools or other objects are on the conveyor bed.

Push the main switch ON (I) after the EMERGENCY BUTTON is released **(Figure 12-3).**

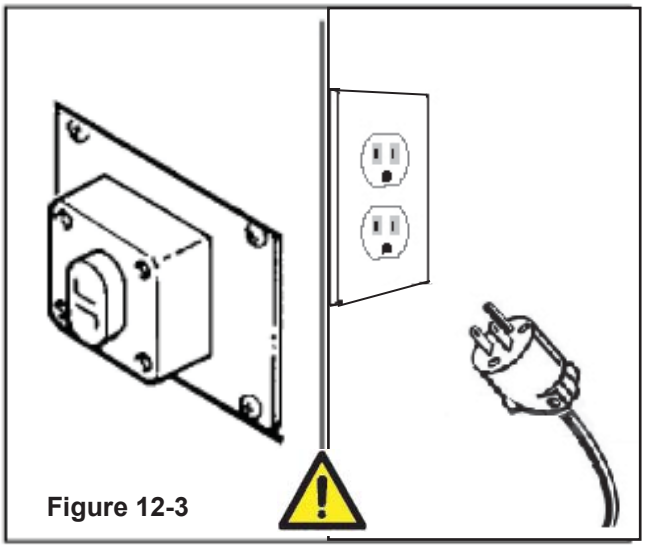

Figure 12-3

12.3 Starting Production

After having adjusted the machine according to the box dimensions (height-width), let the machine run without cartons and check its safety devices. Then start the working cycle.

12.4 Tape Replacement and Threading

See Manual 2: **AccuGlide™ 3 High Speed 2 Inch Taping Heads**.

Press the LATCHING EMERGENCY STOP BUTTON.

WARNING

- **To reduce the risk associated with sharp blade hazards:**
  - Keep hands and fingers away from tape cutoff blades under orange blade guards. The blades are extremely sharp.

12.5 Box Size Adjustment

Repeat all the operations shown in **Section 11 - Setup and Adjustments.**

12.6 Cleaning

Before carrying out any cleaning or maintenance operation stop the machine by Pushing the OFF (O) switch on the main and disconnect the electric power **(Figure 12-3).**

12.7 Table of Operation Adjustments - Operator Qualifications

1	Tape loading and threading	1
2	Tape web alignment	1
3	Adjustment of one-way tension roller	1
4	Adjustment to box size (H and W)	1
5	Top flap compression rollers	1
6	Adjustment of tape applying spring	1
7	Conveyor bed height adjustment	1
8	Special Adjustment-Changing tape leg length	2
9	Special Adjustment-Column re-positioning	2

12.8 Safety Devices Inspection

1 Taping units blade guard
2 Latching emergency stop button
3 STOP/OFF (O) main switch

12.9 Troubleshooting Guide

PROBLEM	CAUSE	CORRECTION
When pressing the ON button the machine does not start	The lockable emergency stop button is pressed	Release the emergency stop button Check the electrical system
The magnetothermic protection opens the main switch	Motor under stress Thermal cut-out not at correct amperage setting	Check that the drive belts are not blocked Set the correct amperage
Drive belts do not convey boxes	Narrow boxes Worn drive belts Taping head applying spring holder missing Taping head applying spring set too high	Check machine specifications Boxes are narrower than recommended, causing slippage and premature belt wear Replace drive belts Adjust the box height adjustment with the crank Reduce spring pressure
Drive belts do not turn	Worn or missing friction rings Drive belt tension too low Electrical disconnect Motor not turning	Replace friction rings Adjust belt tension Check power and electrical plug Evaluate problem and correct

(continued on next page)

12.9 Troubleshooting Guide (continued)

PROBLEM	CAUSE	CORRECTION
Drive belts break	Worn belt	Replace belt
Squeaking noise as boxes pass through machine	Dry compression rollers Defective column bearings	Lubricate compression rollers Replace column bearings
Tape not centered on box seam	Tape drum not centered Centering guides not centered Box flaps not of equal length	Reposition tape drum Adjust centering guides Check box specifications
The tape leg on the front of the case is too long	The tape is threaded incorrectly The tape tension is too low The knurled roller drags Tape tracks to one side or drags on the support tabs of applying frame Taping heads is not set up properly	Check machine specifications Boxes are narrower than recommended, causing slippage and premature belt wear Replace drive belts Adjust the box height adjustment with the crank Reduce spring pressure

(continued on next page)

12.9 Troubleshooting Guide (continued)

PROBLEM	CAUSE	CORRECTION
The blade does not cut tape or the tape end is jagged or shredded	The blade is dull and/or has broken teeth	Replace the blade
	Tape tension is insufficient	Increase tape tension by adjusting the one-way roller
	Adhesive has built up on the blade	Clean and adjust the blade
	The blade is in backwards	Make sure the blade is bottomed out against the mounting bolts
	One or both cutter springs are missing or stretched	Lubricate the blade oiler pad on the blade guard
		Mount the blade so that the beveled edge is away from the entrance end of the head
		Replace the defective spring(s)
Tape is tabbing on the trailing leg on the back of the box	There is excess on the tape drum assembly and/or the one-way tension roller assembly	Adjust the one-way tension roller and/or tape drum assembly
	Rollers in the tape path do not rotate freely	Clean adhesive deposits from the surface ends and shafts of the rollers. Remove all lubricant from roller surfaces
	The blade is not cutting tape properly	Refer to tape cutting problems
	The tape is threaded incorrect	Rethread tape
	Applying mechnism spring has too little tension	Move spring hook to next tighter hole

13.1 Safety Measures (see section 3)

Carrying out maintenance and repairs may imply the necessity to work in dangerous situations. This machine has been designed making reference to the standards EN292 NOV. 92/6.1.2 and EN292/2NOV. 92/5.3.

WARNING

- **To reduce the risk associated with mechanical and electrical hazards:**
  - Read, understand, and follow all safety and operating instructions before operating or servicing the case sealer.
  - Allow only properly trained and qualified personnel to operate and service this equipment.
- **To reduce the risk associated with pinches, entanglement and hazardous voltage:**
  - Turn electrical supply off and disconnect before performing any adjustments, maintenance or servicing the machine or taping heads.

13.2 Tools and Spare Parts Supplied with the Machine

See Spare Parts Order Section.

13.3 Recommended Frequency of Inspection and Maintenance Operations

Operation	Frequency	Qualification	Sections
Inspection safety features	daily	1	13.4
Cleaning of machine	weekly	1	13.5
Cleaning of cutter blade	weekly	2	13.6
Oiling of felt pad	weekly	2	13.7
Lubrication	monthly	2	13.7-13.8
Blade replacement	when worn	2	See Manual 2
Drive belt replacement	when worn	2	13.10

13.4 Inspections to be Performed Before and After Every Maintenance Operation

Before every maintenance operation, turn the main switch OFF (O) and disconnect the plug from the control panel. During the maintenance operation only the operator responsible for this duty must work on the machine. At the end of every maintenance operation check the safety devices.

13.5 Check Efficiency of Safety Features

1. Blade guard assembly upper taping head
2. Blade guard assembly lower taping head
3. Latching Emergency stop button with mechanical lock (interrupt supply of electrical power)
4. Turn the main switch STOP/OFF (O)
5. Safety guards top drive belts

13.6 Cleaning of Machine

Qualification / Skill 1
A weekly cleaning with dry rags or diluted detergents is necessary. Cardboard boxes produce a significant quantity of dust and paper chips when processed or handled in case sealing equipment. If this dust is allowed to build up on machine components, it can cause component wear and over-heating of drive motors. The dust buildup is best removed from the machine with a vacuum cleaner. Depending on the number of cartons processed, this cleaning should be done weekly. Excessive buildup that cannot be removed by vacuuming should be removed with a damp cloth.

13.7 Cleaning of Cutter Blade

Qualification / Skill 2

- Should tape adhesive buildup occur, carefully wipe clean with oily cloth or brush. Oil prevents the buildup of tape adhesive **(Figure 13-1).**
- Worn or damaged cutter blades must be replaced promptly in order to guarantee a perfect cut of the tape. Lubricate the felt pad on the blade guard without saturating it.

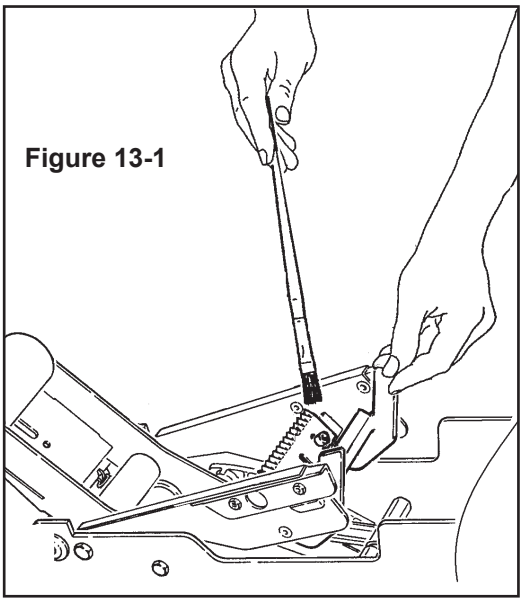

Figure 13-1

⚠ WARNING

- **To reduce the risk associated with sharp blade hazards:**
  – Keep hands and fingers away from tape cutoff blades under orange blade guards. The blades are extremely sharp.

13.8 Lubrication

Most of the machine bearings, including the drive motor, are permanently lubricated and sealed and do not require additional lubricant.

Figures illustrate the frame points which should be lubricated every 250 hours of operation. Lubricate the rotating and pivoting points noted by the arrows with Silicone. At the same time, a small amount of Silicone should be applied to the end of each spring where the loop is secured to an eyelet **(Figure 13-2).**

Note: Wipe off excess Silicone. It will attract dust which can cause premature equipment wear and jamming. Take care that Silicone is not left on the surface of rollers around which tape is threaded, as it can contaminate the tape's adhesive.

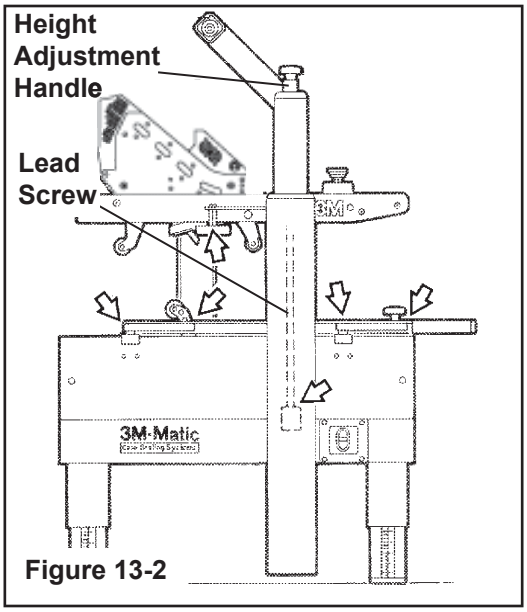

Figure 13-2

13.9 Lubrication Products

- Synthetic Silicone Spray may be used on Lead Screw **(Figure 13-2).**

WARNING

- **To reduce the risk associated with mechanical and electrical hazards:**
- Turn electrical supply off and disconnect before performing any adjustments, maintenance or servicing the machine or taping heads.

13.10 Box Drive Belt Replacement

Note – *3M recommends the replacement of drive belts in pairs, especially if belts are unevenly worn.*

Lower Drive Belts (Figure 13-4)

1. Remove and retain center plate **(A)** and four (4) screws.
2. Remove and retain side cover **(B)** and fasteners.
3. Loosen, but do not remove lock nut **(C)**.
4. Loosen tension screw **(D)** until all belt tension is removed.
5. Pull belt splicing pin **(E)** out and remove belt.
6. Place new belt over pulleys with laced splice at top. Insert splicing pin.

Important – Pin must not extend beyond edge of belt.

7. Adjust belt tension as explained in "Adjustments - Box Drive Belt Tension."
8. Replace side cover and center plate and secure with original fasteners.

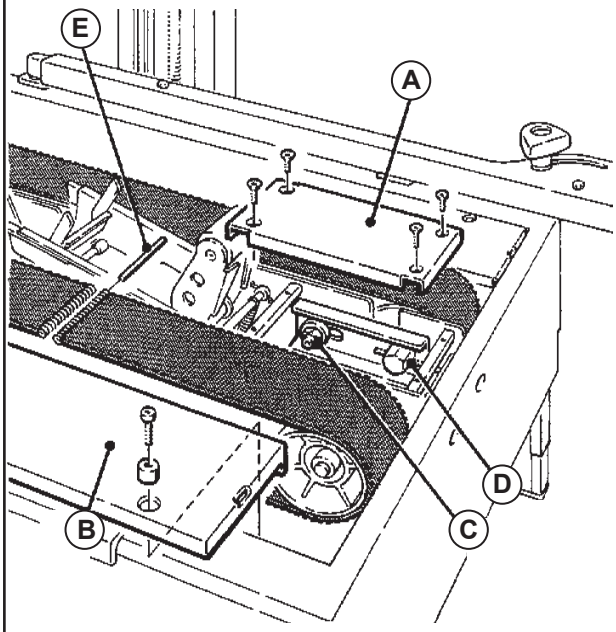

Figure 13-4 Lower Drive Belt Replacement

13.11 Box Drive Belt Tension and Drive Pulley Rings

Before installing a new belt, check the orange plastic drive pulley rings for wear. If torn, broken, or worn smooth, replace the rings **(Figure 13-6).**

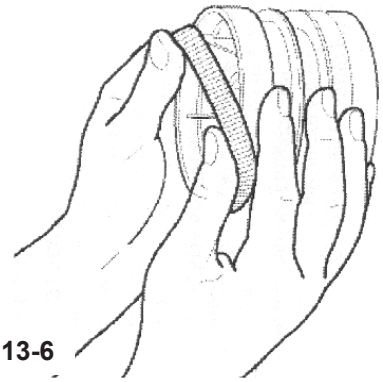

Figure 13-6

WARNING

- **To reduce the risk associated with mechanical and electrical hazards:**
  - Turn electrical supply off and disconnect before performing any adjustments, maintenance or servicing the machine or taping heads.

13.12 Box Drive Belt Tension

The two (2) continuously moving drive belts convey boxes through the tape applying mechanism. The box drive belts are powered by an electric gear motor.

Tension adjustment of these belts may be required during normal operation (for Belt Tension Adjustment - refer to **Section 11 / Setup and Adjustments**). Belt tension must be adequate to positively move the box through the machine and the belts should run fully on the surface of the pulleys at each end of the frame. The idler pulleys on the infeed end are adjusted in or out to provide proper belt tension. Each belt is adjusted separately.

Belt tension is obtained by tightening the adjustment screw so that a moderate pulling force of 3.5kg [7 lbs.] applied at the mid-span, as shown in **Figure 13-7**, will deflect the belt 25mm [1 inch]. This will assure positive contact between the belt and the drive pulley on the discharge end of the drive assembly.

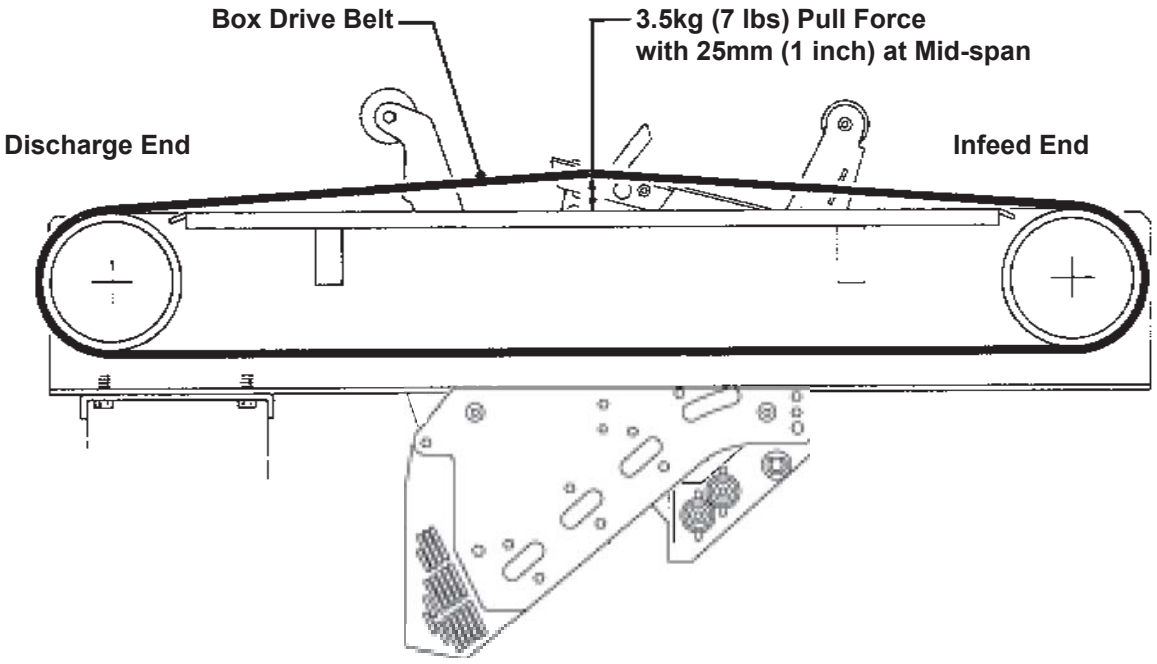

Figure 13-7 Box Drive Belt Tension Adjustment

(Box Drive Belt Tension Adjustment - next page)

Refer to **Figure 13-8 a**nd adjust belt tension as follows:

1. Remove and retain center plate/front cover and four screws.
2. Loosen, but do not remove, M10 lock nut with a 17mm open-end wrench.
3. Reset the tension on the drive belts as needed. Adjust the M8 tension screws in (clockwise) to **increase** tension or out (counterclockwise) to **decrease** tension. Tighten lock nut to secure tension setting.
4. Replace center plate/front cover and secure with original screws.

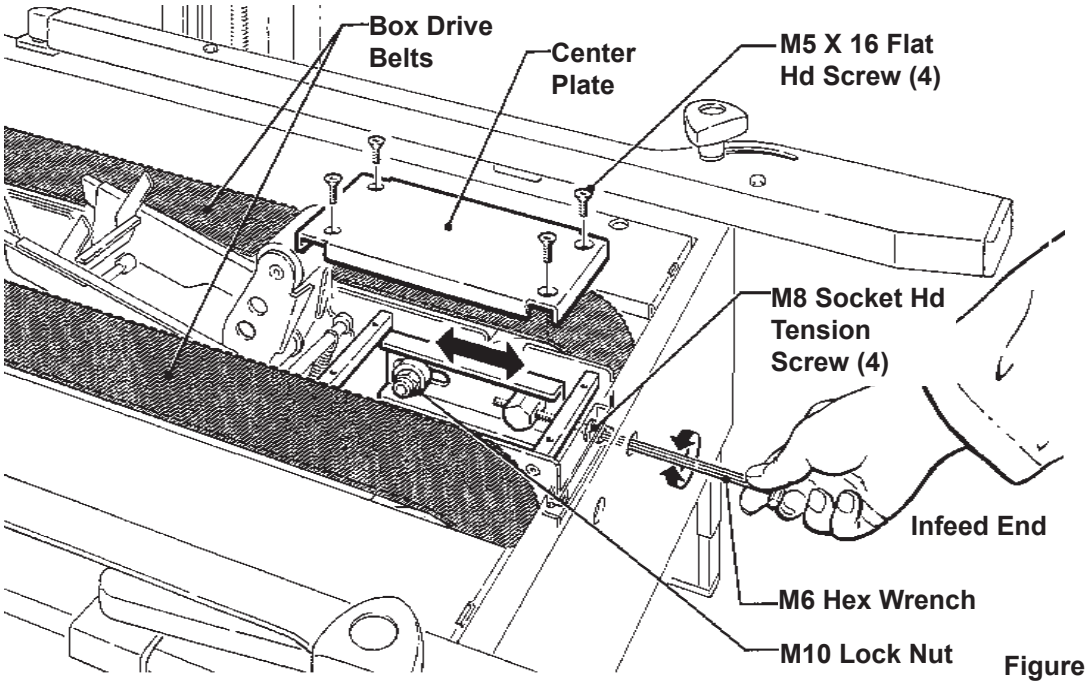

Figure 13-8

13.11 List of the Maintenance Operations

Date: **Description of Operation**

14.1 Information for Disposal of Machine

The machine is composed of the following materials:

- Steel structure
- Nylon rollers
- Drive belts in PVC
- Nylon pulleys

For machine disposal, follow the regulations published in each country.

14.2 Emergency Procedures

In case of danger/fire:
Disconnect plug of power cable from power supply. **(Figure 14-1)**

IN CASE OF FIRE

Use a fire extinguisher containing CO2 **(Figure 14-2).**

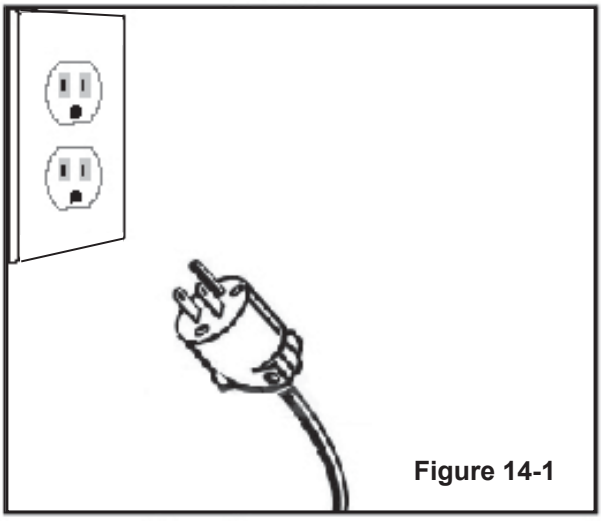

Figure 14-1

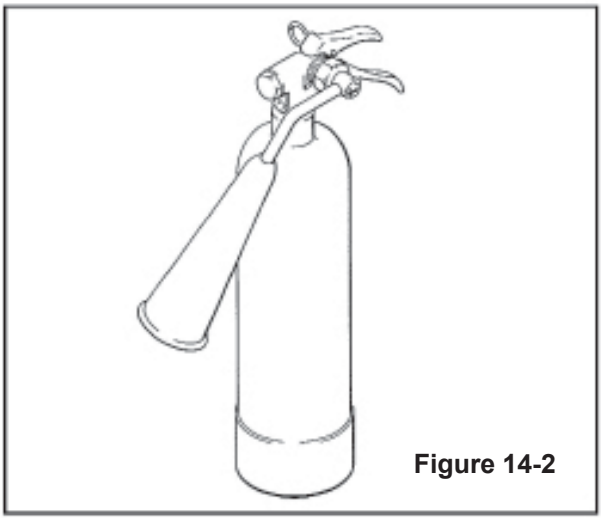

Figure 14-2

15.1 Statement of Conformity

See Section 1.1.

15.2 Emission of Hazardous Substances

Nothing to report

15.3 List of Safety Features

List of components/assemblies with safety functions

- LATCHING EMERGENCY STOP BUTTON
- Thermal cut-out relay
- Fixed guards upper drive belts
- Blade guard assemblies on both taping heads

- ***Important:*** Install earth wire protection on electrical installation.

All safety features/components must be explained and highlighted to all operators and to the person responsible for spare parts in order to ensure that these components are always on hand or ordered as a priority procedure.

ONLY USE ORIGINAL REPLACEMENT PARTS

15.4 Copies of Test Reports, Certifications (etc.) Required by User

N/A

THIS PAGE IS BLANK

16.1 Electric Diagram

1 Phase

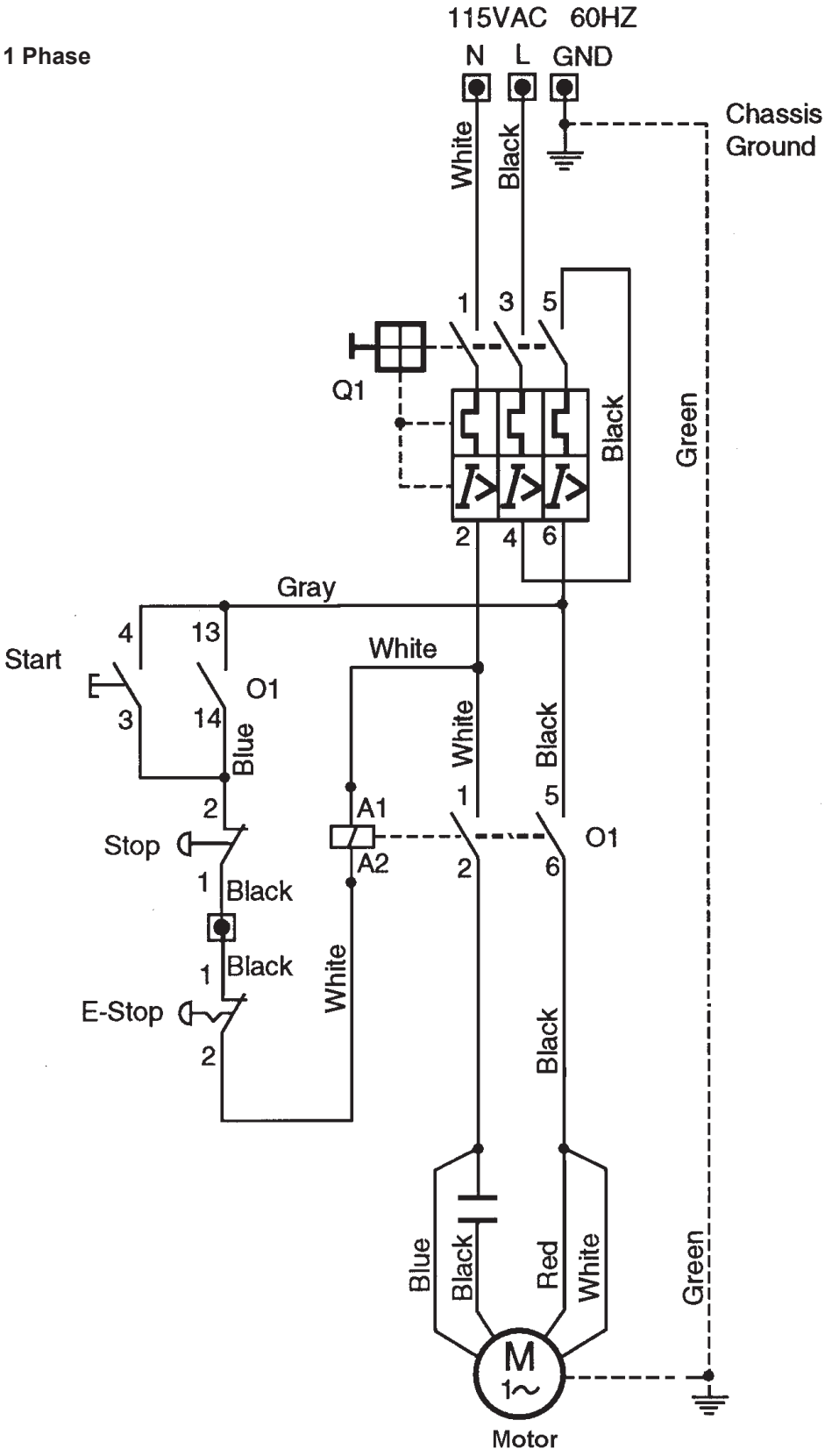

THIS PAGE IS BLANK

16.2 Spare Parts Order

Replacement Parts Ordering Information and Service

Refer to the first page of this instruction manual "Replacement Parts and Service Information".

Order parts by quoting the following information:
(Refer to the Identification Plate on the Machine)

- MACHINE MODEL
- SERIAL NUMBER
- FIGURE NO.
- POSITION
- 3M PART NO. (11 DIGITS)
- DESCRIPTION
- QUANTITY

Refer to Manual 2 for recommended taping head spare parts.

Important!
The machine is constantly revised and improved by our designers. The spare parts catalogue is also periodically updated. It is very important that all the orders of spare parts make reference to the serial number of the machine (located on the identification plate on the machine).

The manufacturer reserves the right to modify the machine at any time without notice.

It is suggested that the following spare parts be ordered and kept on hand.

200a

Qty.	3M-Part Number	Description
2	78-8070-1531-4	Belt-Drive W/Hook

(See Manual 2 / Taping Heads)

Tool Kit

A tool kit, part number TBA, is available as a stock item. The kit contains the necessary open-end and hex socket wrenches for use with the metric fasteners on the case sealer. The threading tool, part number 78-8076-4726-4, contained in above kit is also available as a replacement stock item.

Labels

In the event that any labels are damaged or destroyed, they must be replaced to ensure operator safety. See **Section 3 - Safety**.

THIS PAGE IS BLANK

200a Adjustable Case Sealer, Type 40800
Frame Assemblies

To Order Parts:

1. Refer to first illustration, **Frame Assemblies,** for the **Figure Number** that identifies a specific portion of the machine.

2. Refer to the appropriate **Figure or Figures** to determine the parts required and the parts reference number.

3. The Parts List that follows each illustration, includes the **Reference Number, Part Number** and **Part Description** for the parts on that illustration.

   Note **–** The complete description has been included for standard fasteners and some commercially available components. This has been done to allow obtaining these standard parts locally, if desired.

4. Order parts by Part Number, Part Description and Quantity required. Also include the model/machine name, machine type, and serial number that are located on the identification plate.

5. Refer to the first page of this instruction manual **"Replacement Parts and Service Information"** for replacement parts ordering information.

Important **–** Not all the parts listed are normally stocked items. Some parts or assemblies shown are available only on special order. Contact 3M/Tape Dispenser Parts to confirm item availability.

Options and Accessories

For additional information on the options and accessories listed below, contact your 3M Representative.

Part Number	Option/Accessory
78-8052-6553-1	Box Hold-Down Attachment
78-8069-3983-7	Caster Kit Attachment
78-8069-3924-1	Conveyor Extension Attachment
70-0064-4963-4	AccuGlide™ 3 Upper Taping Head - 2 inch, Type 10800
70-0064-4962-6	AccuGlide™ 3 Lower Taping Head - 2 inch, Type 10800
70-0064-3000-6	Compression Roller Kit
78-8060-8476-6	Tool and Parts Kit
78-8114-0940-4	Three Flap Folder Kit

THIS PAGE IS BLANK

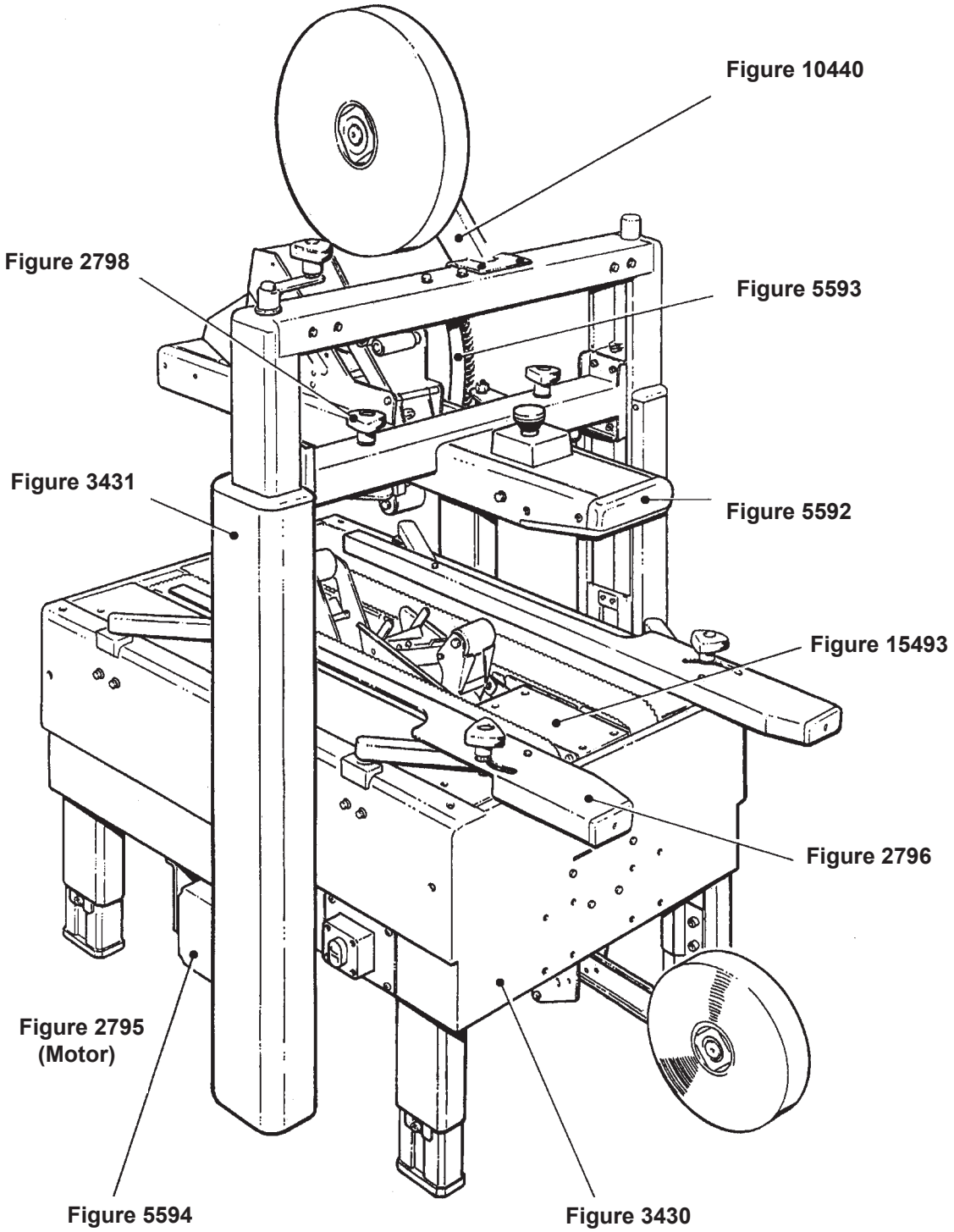

Frame Assemblies

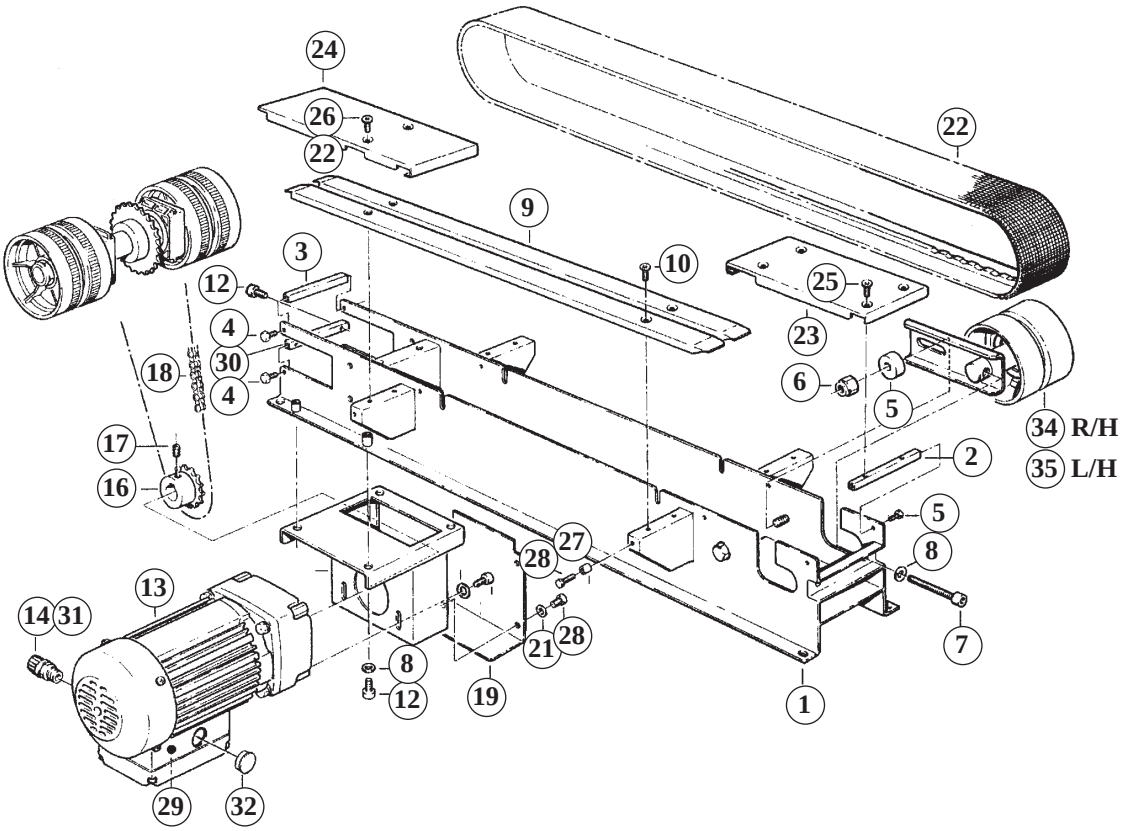

Figure 15493 / 1

Figure 15493 / 1

Ref. No.	3M Part No.	Description
15493-1	78-8070-1513-2	Frame – Drive
15493-2	78-8070-1514-0	Spacer
15493-3	78-8070-1515-7	Spacer
15493-4	26-1003-5829-5	Screw – Hex Hd, M6 x 12
15493-5	78-8070-1518-1	Spacer – Shaft
15493-6	26-1003-6918-5	Nut – Hex Flange, M10, Plastic Insert
15493-7	78-8070-1519-9	Screw – Soc Hd Hex Hd, M8 x 70
15493-8	78-8017-9318-9	Washer – Plain 8 mm
15493-9	78-8070-1520-7	Guide – Drive Belt
15493-10	26-1005-4757-4	Screw – Flat Hd M5 x 20
15493-11	78-8070-1521-5	Support – Gearbox
15493-12	26-1003-7964-8	Screw – Soc Hd Hex Soc Dr, M8 x 20
15493-13	78-8070-1522-3	Gear Motor – 115V, 60HZ
15493-14	78-8076-4715-7	Cord – Grip
15493-15	78-8070-1523-1	Screw – 1/4-28 x 1/2 SHCS
15493-16	78-8137-0936-3	Sprocket – Z24 P 3/8 inch
15493-17	78-8137-0940-5	Screw
15493-18	78-8054-8987-5	Chain – 3/8 inch, 57 Links
15493-19	78-8137-0938-9	Support/Cover – Motor
15493-20	78-8010-7209-7	Screw – Soc Hd, M6 x 12
15493-21	26-1000-0010-3	Washer – Flat, M6
15493-22	78-8070-1531-4	Belt – Drive W/Hook
15493-23	78-8070-1532-2	Plate – Front
15493-24	78-8113-6754-5	Cover – Rear, W/English Language Label
15493-25	26-0001-5862-1	Screw – Flat Hd Soc, M5 x 12
15493-26	26-1005-5316-8	Screw – Flat Hd Hex Dr, M5 x 16
15493-27	78-8070-1534-8	Stud – Side Plate
15493-28	78-8060-8488-1	Screw – Hex Hd, M5 x 20
15493-29	26-1011-8828-7	Capacitor – 115V Gearmotor
15493-30	78-8094-6015-3	Spacer
15493-31	78-8076-5211-6	Set Nut – GMP13.5
15493-32	78-8060-7885-9	End Cap – /25X1,2
15493-33	78-8042-2919-9	Washer – Triple, M6
15493-34	78-8100-1236-5	Belt Tensioning Assembly – R/H
15493-35	78-8100-1237-3	Belt Tensioning Assembly – L/H

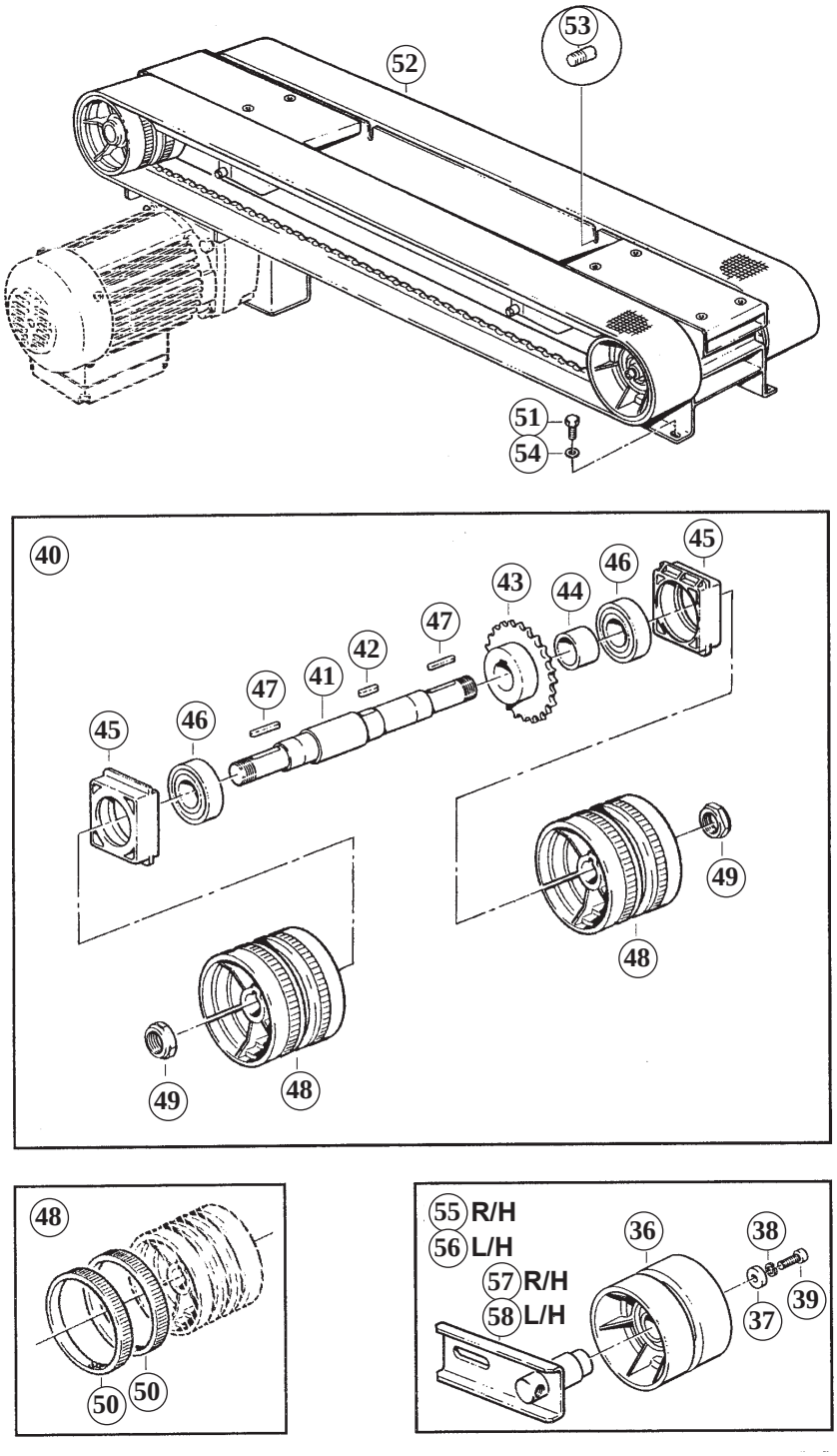

Figure 15493 / 2

Figure 15493 / 2

Ref. No.	3M Part No.	Description
15493-36	78-8052-6710-7	Roller – Idler
15493-37	78-8052-6709-9	Washer – Special
15493-38	78-8010-7435-8	Washer – Lock, M6
15493-39	26-1003-7957-2	Screw – Soc Hd Hex Hd, M6 x 16
15493-40	78-8070-1527-2	Shaft – W/Drive Pulleys
15493-41	78-8070-1528-0	Shaft – Gearbox
15493-42	78-8057-5811-3	Key – 6 x 6 x 20 mm
15493-43	78-8054-8986-7	Sprocket – 3/8 inch Pitch, 28 teeth
15493-44	78-8054-8984-2	Bushing
15493-45	78-8070-1529-8	Support – Shaft
15493-46	78-8070-1530-6	Bearing – 6205-2RS
15493-47	78-8057-5739-6	Key – M5 x 5 x 30 mm
15493-48	78-8076-5105-0	Pulley Assembly – Drive
15493-49	78-8060-8416-2	Nut – Special, M20 x 1
15493-50	78-8052-6713-1	Ring – Polyurethane
15493-51	26-1003-5841-0	Screw – M8 x 16
15493-52	78-8137-6085-3	Bottom Drive Assembly
15493-53	78-8076-4500-3	Stud – Mounting
15493-54	78-8017-9318-9	Washer – Plain 8 mm
15493-55	78-8100-1236-5	Belt Tensioning Assembly – R/H
15493-56	78-8100-1237-3	Belt Tensioning Assembly – L/H
15493-57	78-8100-1238-1	Belt Tensioner – R/H
15493-58	78-8100-1239-9	Belt Tensioner – L/H

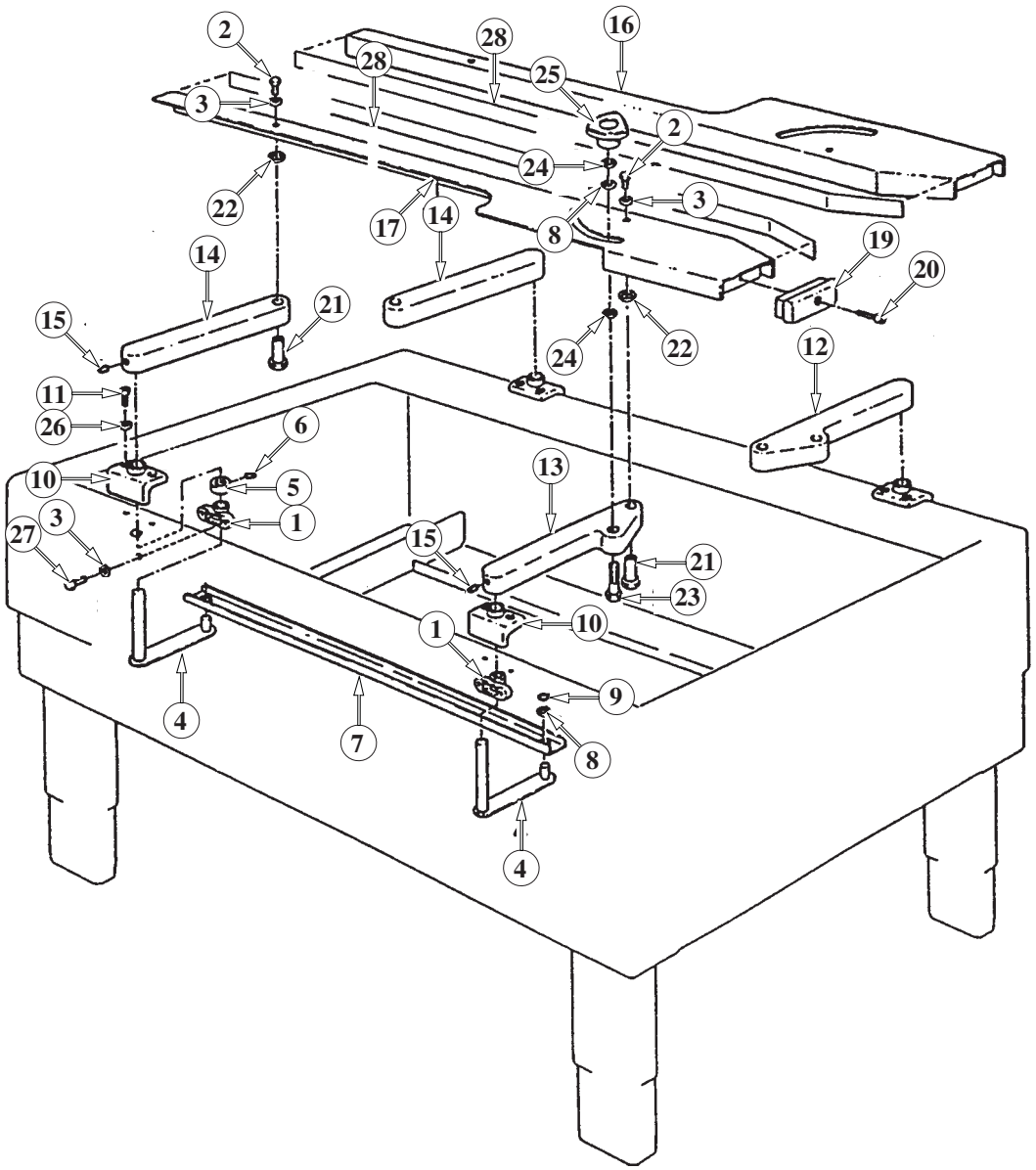
2
28
28
16
25
3
2
24
22
17
14
8
3
19
20
14
21
15
24
22
12
11
26
6
10
5
1
13
3
27
15
21
23
1
10
9
4
7
8
4

Figure 2796

200a

Figure 2796

Ref. No.	3M Part No.	Description
2796-1	78-8070-1536-3	Support – Guide Arm
2796-2	78-8010-7169-3	Screw – Hex Hd, M6 x 12
2796-3	26-1000-0010-3	Washer – Flat, M6
2796-4	78-8070-1537-1	Lever With Pivot
2796-5	78-8070-1538-9	Bushing
2796-6	26-1003-8816-9	Screw – Set, M5 x 6
2796-7	78-8070-1539-7	Link – Guide
2796-8	78-8017-9074-8	Washer – 15 mm, Nylon
2796-9	78-8052-6733-9	Ring – M10, Special
2796-10	78-8070-1540-5	Support – Lever
2796-11	78-8032-0382-3	Screw – Soc Hd, M5 x 16
2796-12	78-8070-1541-3	Guide Arm – Front, Right
2796-13	78-8070-1542-1	Guide Arm – Front, Left
2796-14	78-8070-1543-9	Guide Arm – Rear
2796-15	78-8076-4505-2	Screw – Set, M6 x 8
2796-16	78-8070-1544-7	Guide – Right
2796-17	78-8070-1545-4	Guide – Left
2796-19	78-8070-1546-2	Cap – Guide
2796-20	26-1003-7953-1	Screw – Soc Hd, M5 x 30
2796-21	78-8070-1547-0	Shaft - Guide
2796-22	78-8070-1548-8	Washer – 20 x 12, 5 x 1 Nylon
2796-23	26-1003-5852-7	Screw – Hex Hd, M10 x 40
2796-24	78-8052-6566-3	Washer – Friction
2796-25	78-8070-1549-6	Knob – VTR-B-M10
2796-26	78-8005-5735-3	Washer – Lock, M5
2796-27	78-8032-0375-7	Screw – Hex Hd, M6 x 16
2796-28	78-8079-5378-7	Tape – Guide

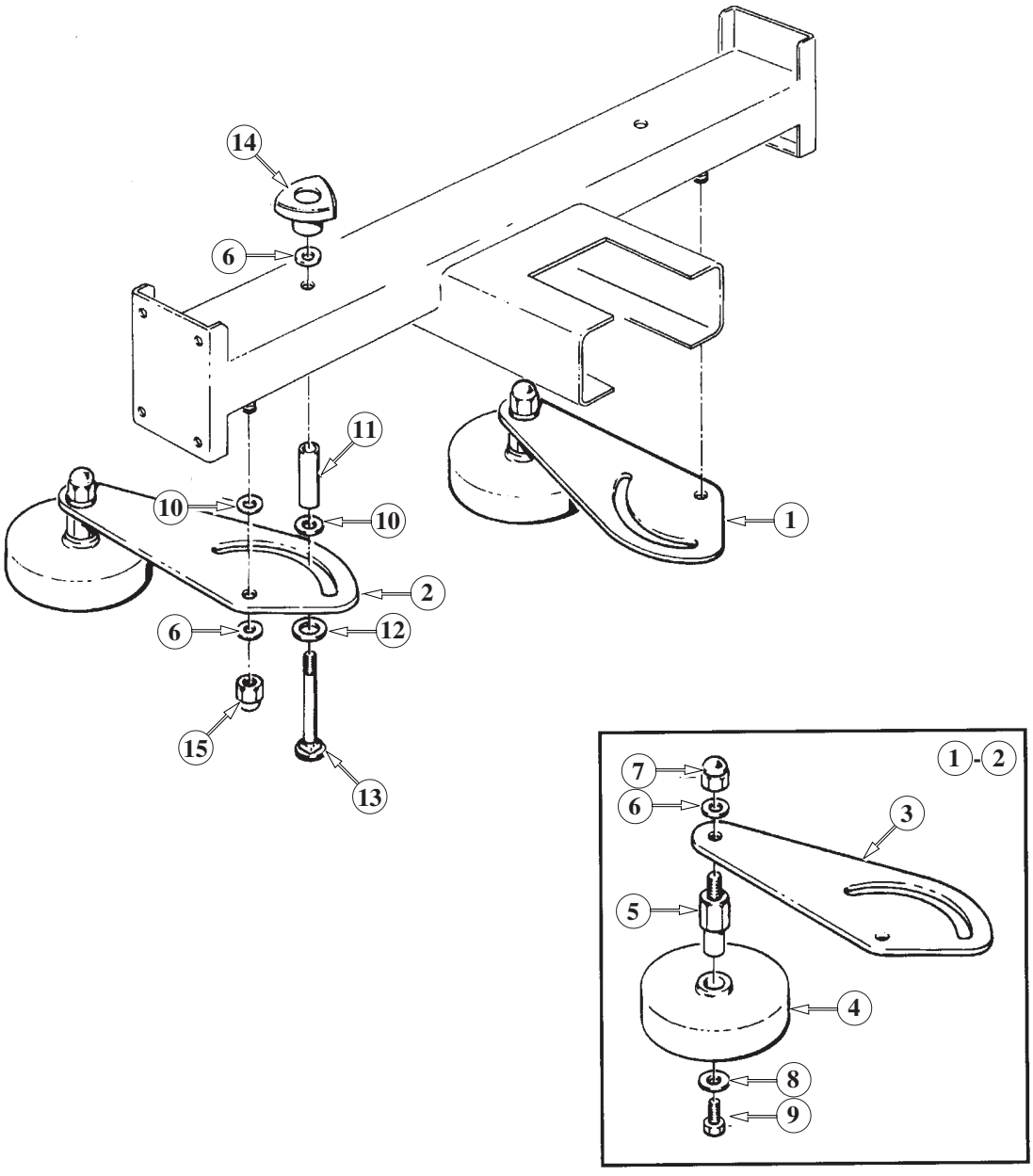

Figure 2798

200a

Figure 2798

Ref. No.	3M Part No.	Description
2798-1	78-8070-1557-9	Compression Roller Assembly – Right
2798-2	78-8070-1558-7	Compression Roller Assembly – Left
2798-3	78-8070-1559-5	Support – Compression Roller
2798-4	78-8054-8648-3	Pressure Roller
2798-5	78-8070-1560-3	Stud – Roller Mounting
2798-6	78-8052-6566-3	Washer – Friction
2798-7	78-8070-1561-1	Nut – M10
2798-8	26-1004-5507-5	Washer – M8
2798-9	26-1003-5841-0	Screw – M8 x 16
2798-10	78-8017-9074-8	Washer – 15 mm, Nylon
2798-11	78-8070-1562-9	Tube – Roller Support
2798-12	12-7991-1752-3	Washer – M14, Plain
2798-13	78-8070-1563-7	Screw – M10 x 80
2798-14	78-8070-1549-6	Knob – VTR-B-M10
2798-15	26-1003-6918-5	Nut – Plastic Insert M10 Hex Flange

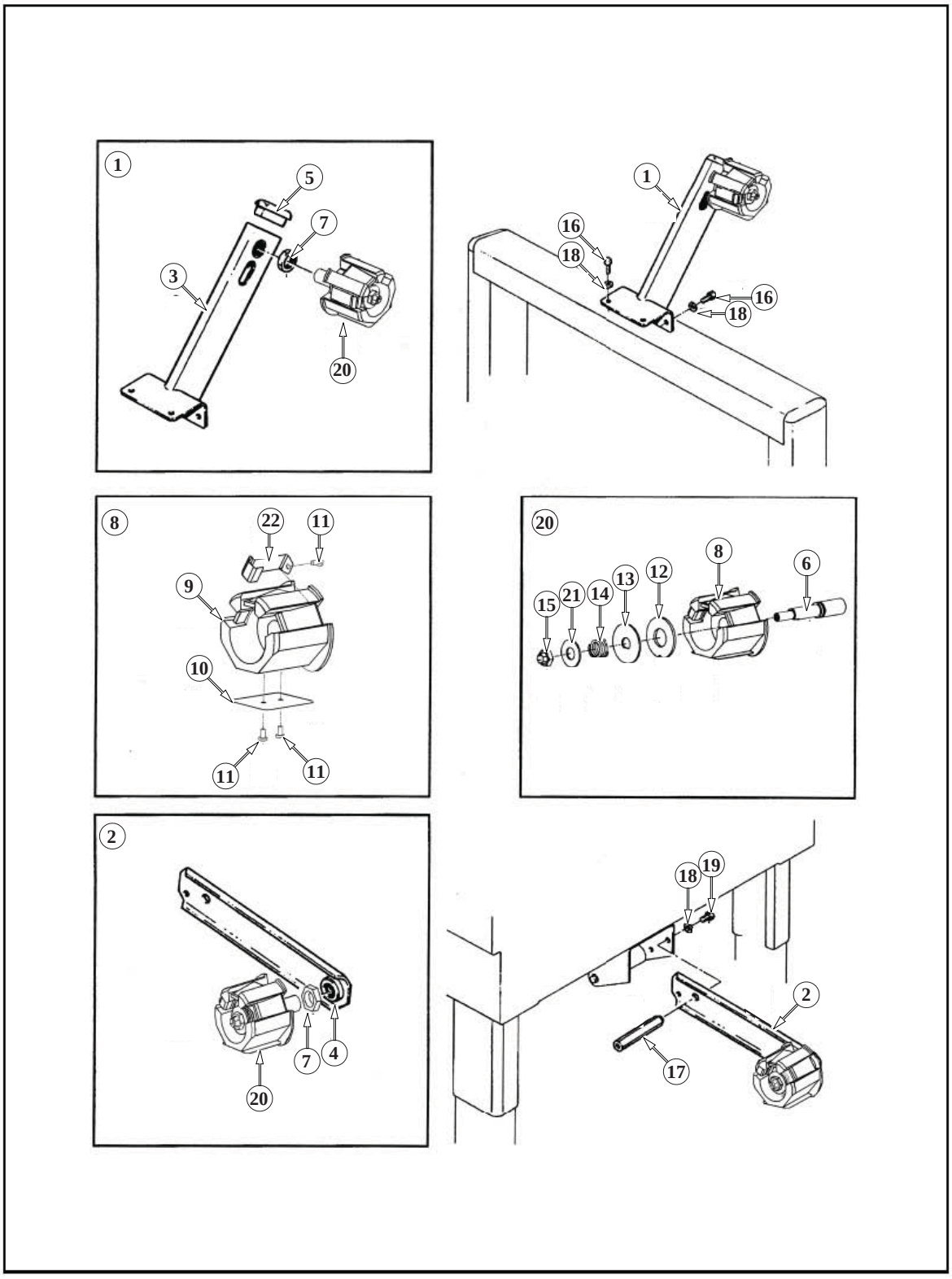

Figure 10440

200a

Figure 10440

Ref. No.	3M Part No.	Description
10440-1	78-8076-4633-2	Tape Roll Bracket Assembly
10440-2	78-8070-1565-2	Tape Drum Bracket Assembly
10440-3	78-8070-1566-0	Bracket – Tape Drum
10440-4	78-8070-1395-4	Bracket – Bushing Assembly
10440-5	78-8070-1568-6	Cap – Bracket
10440-6	78-8076-4519-3	Shaft – Tape Drum
10440-7	78-8017-9169-6	Nut – M18 x 1
10440-8	78-8098-8827-0	Tape Drum Sub-Assembly - 2 Inch
10440-9	78-8098-8749-6	Tape Drum
10440-10	78-8098-8817-1	Leaf Spring
10440-11	26-1002-5753-9	Screw – Self Tapping
10440-12	78-8060-8172-1	Washer – Friction
10440-13	78-8052-6271-0	Washer – Tape Drum
10440-14	78-8100-1048-4	Spring – Core Holder
10440-15	78-8017-9077-1	Nut – Self Locking, M10 x 1
10440-16	78-8032-0375-7	Screw – Hex Hd, M6 x 16
10440-17	78-8070-1215-4	Spacer – Stud
10440-18	26-1000-0010-3	Washer – Flat, M6
10440-19	78-8010-7169-3	Screw – Hex Hd, M6 x 12
10440-20	78-8060-8474-1	Tape Drum Assembly – 2 Inch Head
10440-21	26-1004-5510-9	Washer - Plain, M10
10440-22	78-8098-8816-3	Latch - Tape Drum

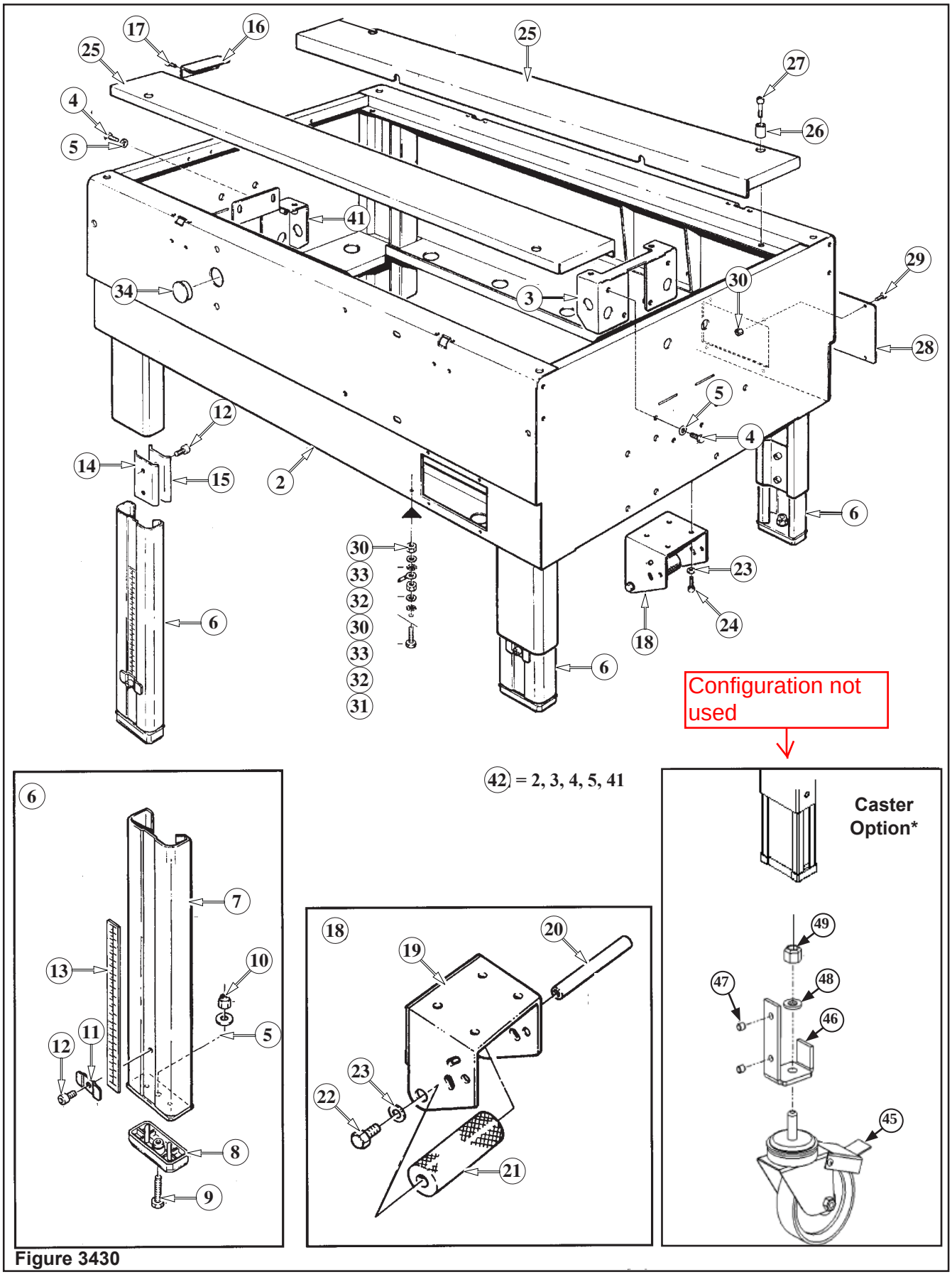
17
16
25
25
27
4
26
5
41
34
3
30
29
28
5
12
4
14
15
2
6
30
33
32
30
33
32
31
6
23
24
18
6
Configuration not used
42 = 2, 3, 4, 5, 41
6
7
13
10
5
12
11
8
9
18
19
20
23
22
21
Caster Option*
49
47
48
46
45

Figure 3430

Figure 3430

Ref. No.	3M Part No.	Description
3430-2	78-8091-0306-8	Bed Conveyor
3430-3	78-8091-0307-6	Support – Drive
3430-4	26-1003-5842-8	Screw – Hex Hd, M8 x 20
3430-5	78-8017-9318-9	Washer – Plain, 8 mm
3430-6	78-8076-5381-7	Leg Assembly – Inner W/Stop
3430-7	78-8076-5382-5	Leg – Inner
3430-8	78-8060-8480-8	Pad – Foot
3430-9	78-8055-0867-4	Screw – Hex Hd, M8 x 30
3430-10	78-8017-9313-0	Nut – Self Locking, M8
3430-11	78-8076-5383-3	Stop – Leg
3430-12	26-1003-7963-0	Screw – Soc Hd, M8 x 16
3430-13	78-8060-8481-6	Label – Height
3430-14	78-8052-6677-8	Clamp – Inner
3430-15	78-8052-6676-0	Clamp – Outer
3430-16	78-8060-8482-4	Plate – Protection
3430-17	26-1003-7948-1	Screw – Soc Hd M5 x 10
3430-18	78-8076-5392-4	Support – Tape Drum
3430-19	78-8060-8483-2	Support – Outboard Roll
3430-20	78-8060-8484-0	Shaft – Roller
3430-21	78-8060-8485-7	Roller
3430-22	78-8032-0375-7	Screw – Hex Hd, M6 x 16
3430-23	26-1000-0010-3	Washer – Flat, M6
3430-24	26-1003-7957-2	Screw – Soc Hd, M6 x 16
3430-25	78-8070-1579-3	Plane – Conveyor Bed
3430-26	78-8060-8486-5	Bushing
3430-27	78-8010-7211-3	Screw – Soc Hd M6 x 25
3430-28	78-8060-8487-3	Cover – Switch
3430-29	78-8060-8087-1	Screw – M5 x 10
3430-30	78-8010-7417-6	Nut – Hex, M5
3430-31	78-8060-8488-1	Screw – Hex Hd, M5 x 20
3430-32	78-8046-8217-3	Washer – Special
3430-33	78-8005-5741-1	Washer – Plain, M5
3430-34	78-8076-4701-7	Cap – /28
3430-41	78-8094-6013-8	Support – Drive
3430-42	78-8094-6014-6	Bed – Conveyor, W/Support

Caster Option

3430-45	78-8098-9076-3	Caster Assembly
3430-46	~~78-8129-6105-6~~	~~Bracket - Wheel~~
3430-47	~~78-8129-6104-9~~	~~Set Screw - M8x8~~
3430-48	78-8017-9059-9	Washer – Spring, Helical, M12
3430-49	78-8060-7532-7	Nut – M12

46 and 47 not used

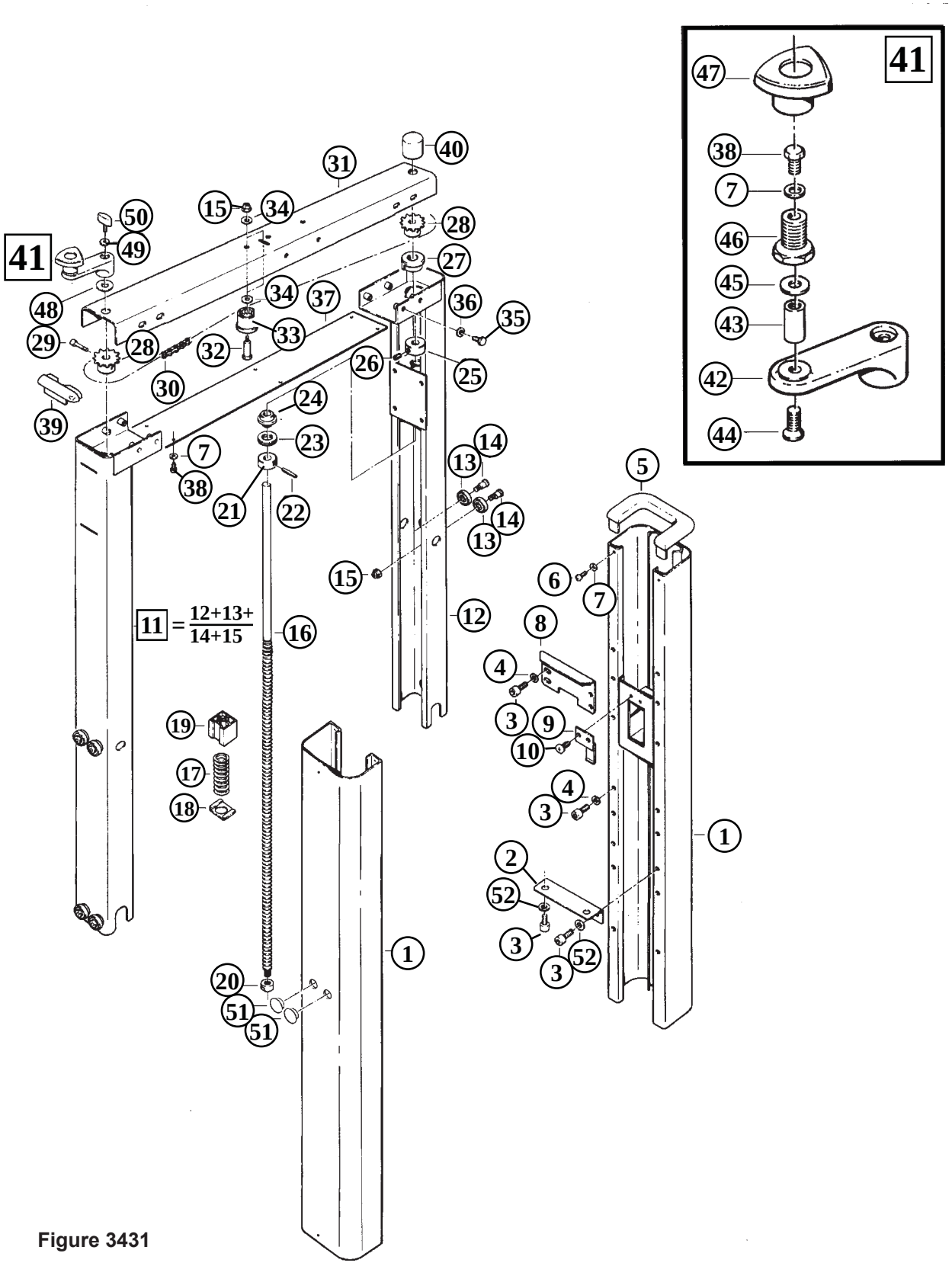
41
47
38
7
46
45
43
42
44
41
50
49
48
29
28
30
39
31
40
15
34
28
27
34
37
36
35
33
32
26
25
24
23
7
38
21
22
14
13
14
13
15
12
11 = 12+13+ 14+15
16
19
17
18
5
6
7
8
4
3
9
10
4
3
1
2
52
3
3
52
1
20
51
51

Figure 3431

Figure 3431

Ref. No.	3M Part No.	Description
3431-1	78-8060-8489-9	Column – Outer
3431-2	78-8060-8490-7	Plate – Column Mounting
3431-3	26-1003-7964-8	Screw – Soc Hd Hex Soc Dr, M8 x 20
3431-4	78-8017-9318-9	Washer – Plain, 8 mm
3431-5	78-8060-8491-5	Cap – Column
3431-6	26-1002-4955-1	Screw – Self Tap, 8P x 13
3431-7	78-8005-5740-3	Washer – Plain, 4 mm
3431-8	78-8060-8492-3	Stop – Height
3431-9	78-8076-5482-3	Plate – Nut Stop
3431-10	78-8060-8087-1	Screw – M5 x 10
3431-11	78-8060-8494-9	Column Assembly – Inner
3431-12	78-8060-8495-6	Column – Inner
3431-13	78-8054-8617-8	Bearing – Special
3431-14	78-8054-8589-9	Screw – Special
3431-15	26-1003-6916-9	Nut – Locking M6, Plastic Insert
3431-16	78-8060-8496-4	Lead Screw
3431-17	78-8054-8969-3	Spring
3431-18	78-8054-8970-1	Bed Plate – Spring
3431-19	78-8054-8571-7	Nut – Plastic
3431-20	78-8054-8968-5	Nut – Special
3431-21	78-8054-8585-7	Collar
3431-22	78-8054-8586-5	Pin
3431-23	78-8054-8584-0	Spacer
3431-24	78-8054-8583-2	Bushing
3431-25	78-8060-8497-2	Bushing – Lead Screw
3431-26	78-8059-5617-0	Screw – Set, M6 x 8
3431-27	78-8060-8498-0	Bushing – Inner Column
3431-28	78-8060-8499-8	Sprocket – 3/8 inch
3431-29	26-1003-7946-5	Screw – Soc Hd, M4 x 25
3431-30	78-8070-1501-7	Chain – 3/8 inch, 156 Links
3431-31	78-8113-6755-2	Housing – Chain, W/English Language Label
3431-32	78-8060-7878-4	Screw – Idler
3431-33	78-8070-1503-3	Roller – Chain Tensioning
3431-34	78-8042-2919-9	Washer – M6
3431-35	26-1003-5829-5	Screw – Hex Hd, M6 x 12
3431-36	26-1000-0010-3	Washer – Flat, M6
3431-37	78-8070-1504-1	Cover
3431-38	78-8010-7157-8	Screw – Hex Hd, M4 x 10
3431-39	78-8070-1505-8	Cap – Inner Column
3431-40	78-8070-1506-6	Cover – Screw
3431-41	78-8076-4807-2	Crank Assembly
3431-42	78-8076-5422-9	Crank
3431-43	78-8070-1509-0	Shaft – Crank
3431-44	26-1005-5316-8	Screw – Flat Hd, Hex Dr, M5 x 16
3431-45	78-8070-1510-8	Washer – Nylon, 7 x 15 x 1
3431-46	78-8070-1511-6	Bushing
3431-47	78-8070-1512-4	Knob – VTR-B-M12
3431-48	78-8076-4800-7	Washer – Crank
3431-49	78-8076-4809-8	Washer – Crank
3431-50	78-8076-4821-3	Key – Stop
3431-51	78-8054-8821-6	Cap – End
3431-52	26-1004-5507-5	Washer – M8

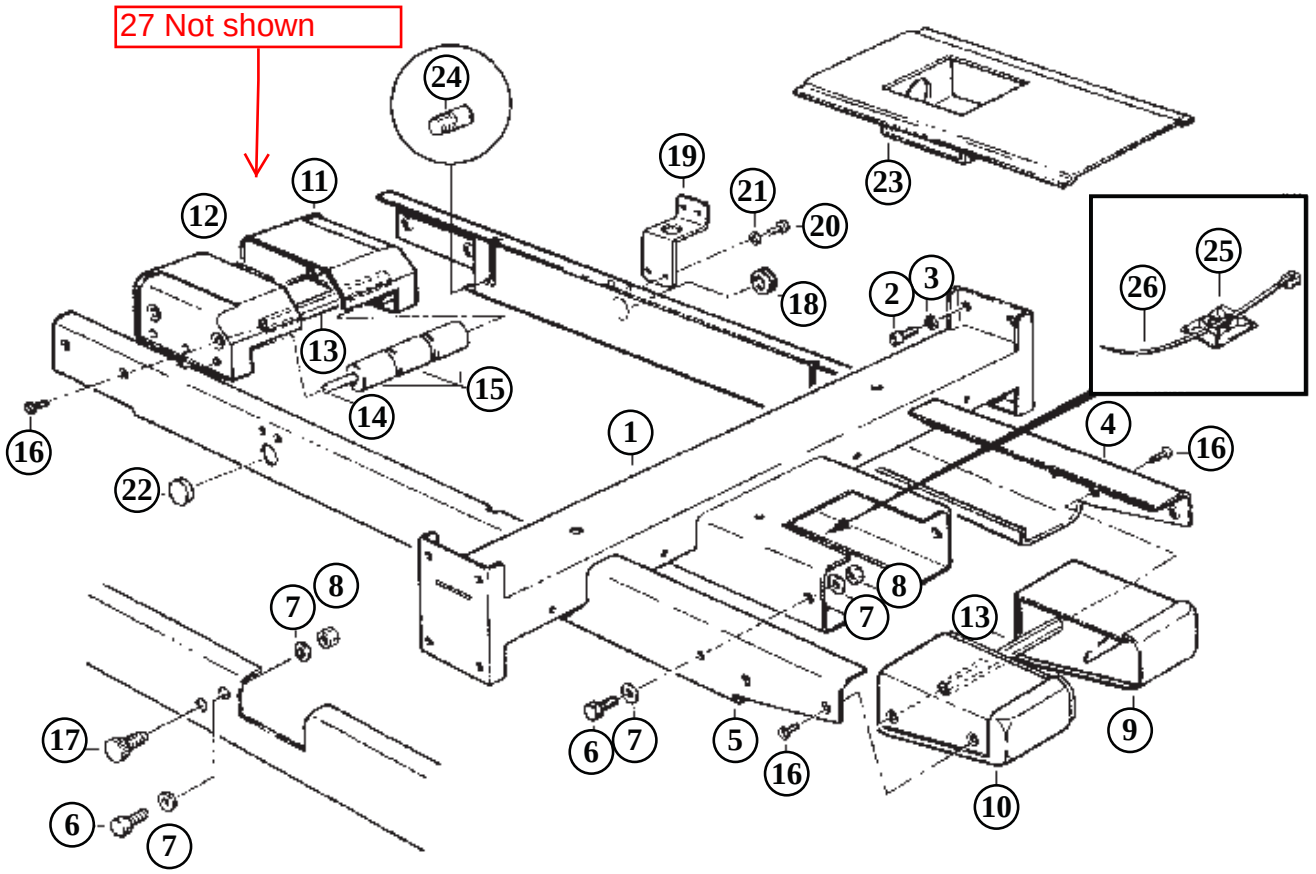
27 Not shown
24
19
21
20
23
11
12
18
2
3
25
26
13
15
14
1
4
16
16
22
8
7
8
7
13
17
6
7
5
16
9
10
6
7

Figure 5592

200a

Figure 5592

Ref. No.	3M Part No.	Description
5592-1	78-8091-0508-9	Bar – Supporting
5592-2	26-1003-7957-2	Screw – Soc Hd Hex Hd, M6 x 16
5592-3	78-8100-1042-7	Washer – /15 x 6.35 x 2
5592-4	78-8113-6756-0	Side Plate – Right, W/English Language Label
5592-5	78-8113-6757-8	Side Plate – Left, W/English Language Label
5592-6	26-1003-5842-8	Screw – Hex Hd, M8 x 20
5592-7	78-8017-9318-9	Washer – Plain, 8 mm
5592-8	26-1000-1347-8	Nut – Hex, M8
5592-9	78-8070-1574-4	Slide – Front, Right
5592-10	78-8070-1575-1	Slide – Front, Left
5592-11	78-8070-1576-9	Slide – Rear, Right 78-8137-8443-2
5592-12	78-8070-1577-7	Slide – Rear, Left 78-8137-8442-4
5592-13	78-8070-1553-8	Spacer
5592-14	78-8070-1554-6	Stud
5592-15	78-8060-7693-7	Roller – 32 x 38 78-8137-8444-0
5592-16	26-1005-5316-8	Screw – Flat Hd Hex Dr, M5 x 16
5592-17	78-8070-1555-3	Block – Upper Head
5592-18	78-8060-7758-8	Fairlead – /20
5592-19	78-8054-8955-2	Clamp – Bracket
5592-20	26-1003-5820-4	Screw – Hex Hd, M5 x 12
5592-21	78-8005-5741-1	Washer – Flat, M5
5592-22	78-8076-4517-7	End Cap – /22 x 1
5592-23	78-8113-6758-6	Cover – Upper, W/English Language Labels
5592-24	78-8076-4500-3	Stud – Mounting
5592-25	78-8070-1318-6	Label – Box Centering
5592-26	78-8100-1234-0	Bezel
5592-27	78-8137-8445-7	Rear Sliding Platen (Not Shown)

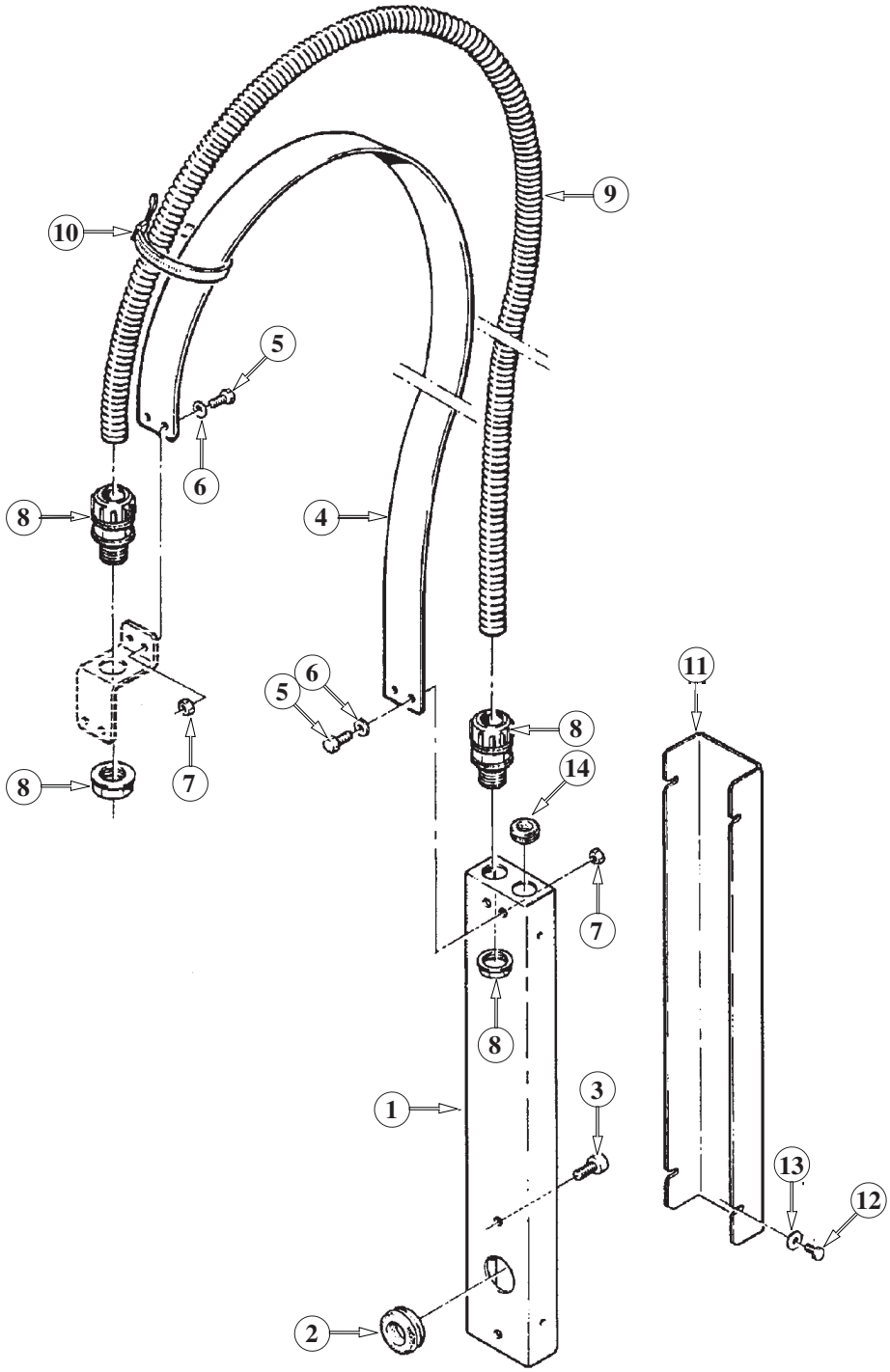

Figure 5593

Figure 5593

Ref. No.	3M Part No.	Description
5593-1	78-8091-0660-8	Housing – Wire
5593-2	78-8076-4702-5	Grommet – /28
5593-3	26-1003-7963-0	Screw – Soc Hd, M8 x 16
5593-4	78-8076-4636-5	Strap – Wire
5593-5	78-8010-7163-6	Screw - Hex Hd, M5 x10
5593-6	78-8005-5741-1	Washer – Flat, M5
5593-7	78-8010-7417-6	Nut – Hex, M5
5593-8	78-8060-7631-7	Connector – 3/8 Inch
5593-9	78-8060-8028-5	Sleeving – /12, 0,93 M.
5593-10	78-8060-8029-3	Clamp – 140 x 3, 5
5593-11	78-8076-4641-5	Cover
5593-12	78-8010-7157-8	Screw – Hex Hd, M4 x 10
5594-13	78-8017-9018-5	Washer – Plain, M4 SPEC.
5594-14	78-8060-7758-8	Fairlead – /20

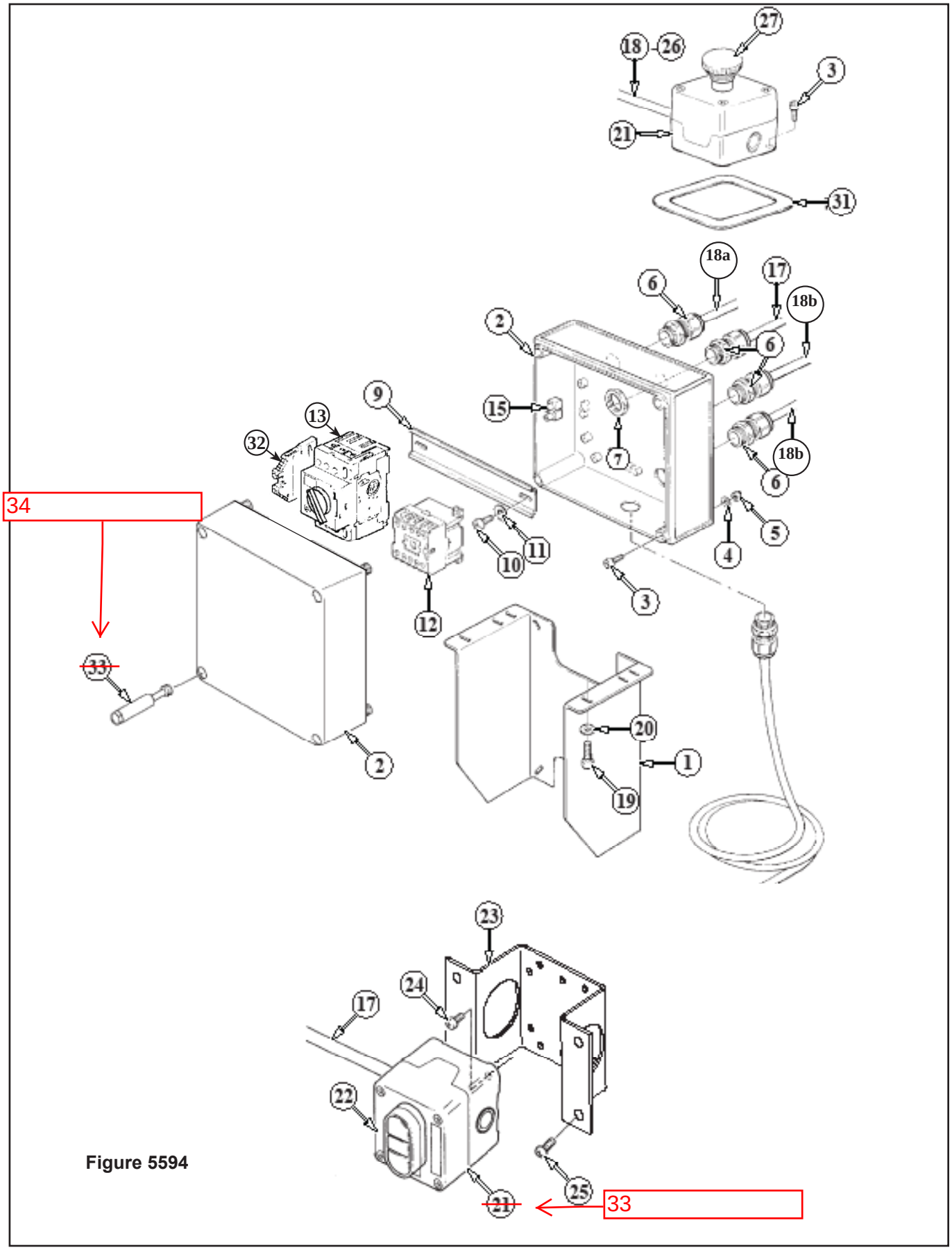
27
18
26
3
21
31
18a
17
6
18b
2
6
9
15
13
32
7
18b
6
34
5
11
10
4
3
12
33
20
2
1
19
23
24
17
22
25
21
33

Figure 5594

Figure 5594

Ref. No.	3M Part No.	Description
5594-1	78-8094-6379-3	Support – Box
5594-2	78-8113-6759-4	Box – W/English Language Label
5594-3	78-8094-6381-9	Screw – Soc Hd, Hex Hd, M4 x 15
5594-4	78-8005-5740-3	Washer – Plain, 4 mm
5594-5	26-1003-6914-4	Nut – Plastic Insert, M4
5594-6	78-8076-4715-7	Cord Grip
5594-7	78-8076-5211-6	Set Nut – GMP 13.5
5594-9	78-8094-6382-7	Guide – Mounting
5594-10	78-8028-8208-0	Screw – 6P x 9,5
5594-11	78-8017-9018-5	Washer – Plain, M4
5594-12	78-8094-6383-5	Contactor – Allen Bradley 110V, 60HZ
5594-13	~~78-8076-5378-3~~	Circuit Breaker-Allen Bradley 1.6 – 2.5A ← 78-8137-0779-7
5594-14	78-8094-6384-3	Ground Clamp – VGPE 4/6
5594-15	78-8076-4968-2	Terminal
5594-16	78-8028-7909-4	Power Cord w/Plug - USA
5594-17	78-8076-5176-1	Cable – FROR 07 3X0.75, 5 Mt
5594-18A	78-8076-5273-6	Cable – 3X1, 5Mt
5594-18B	78-8060-8052-5	Cable – 4X1.5 5Mt 3 Ph
	78-8091-0433-0	Cable – 3X1.5 1 Ph, 5 Mt
5594-19	26-1003-7957-2	Screw – Soc Hex Hd, M6 x 16
5594-20	26-1000-0010-3	Washer – Flat, M6
5594-21	~~78-8076-5194-4~~	Box – E-Stop, Yellow ← 78-8119-6528-0
5594-22	78-8137-0823-3	Switch - ON/Off ← 78-8094-6386-8
5594-23	78-8100-1039-3	Support – On/Off Switch
5594-24	78-8017-9257-9	Screw – Phillips Head, M4 x 10
5594-25	78-8017-9066-4	Screw - Metric, M5X12
5594-26	78-8060-7758-8	Grommet
5594-27	~~78-8137-0609-6~~	E-Stop ← 26-1014-5845-8
5594-28	78-8091-0538-6	Screw - Hex. Hd.
5594-29	78-8076-4716-5	Star Washer – M4
5594-30	78-8010-7416-8	Nut – Hex, M4
5594-31	78-8100-1234-0	Collar
5594-32	78-8094-6384-3	Clamp
5594-33	78-8114-4896-4	Box – On/Off, Grey

Please add item 5594-34 78-8119-8910-8 Screw-Plastic

THIS PAGE IS BLANK

3M

Instructions and Parts List

3M-Matic™

Accuglide™ 3 Upper and Lower High Speed Taping Heads 2 Inch

Type 10800

Serial No._____

For reference, record taping head(s) serial number(s) here.

Important Safety Information

BEFORE INSTALLING OR OPERATING THIS EQUIPMENT
Read, understand, and follow all safety and operating instructions.

Spare Parts

It is recommended you immediately order the spare parts listed in the "Spare Parts/Service Information" section. These parts are expected to wear through normal use, and should be kept on hand to minimize production delays.

3M

3M Industrial Adhesives and Tapes
3M Center, Building 220-5E-06
St. Paul, MN 55144-1000

AccuGlide™ is a Trademark of 3M, St. Paul, MN 55144-1000
Printed in U.S.A.
© 3M 2012 44-0009-2070-0 (E010712-NA)

To Our Customers:

This is the 3M-Matic™/AccuGlide™/Scotch® equipment you ordered. It has been set up and tested in the factory with Scotch® tapes. If technical assistance or replacement parts are needed, call or fax the appropriate number listed below.

Included with each machine is an Instructions and Parts List manual.

Technical Assistance / Replacement Parts and Additional Manuals:

Call the 3M-Matic™ Help line at 1-800 328-1390. Provide the customer support coordinator with the model/machine name, machine type, and serial number that are located on the identification plate (For example: Model 200a - Accuglide 3 - 2 inch - Type 10800 - Serial Number 13282).

United States -

3M Tape Dispenser Parts

241 Venture Drive

1-800-344-9883

Amery, WI 54001-1325

Fax: 1-715-268-8153

Identification Plate

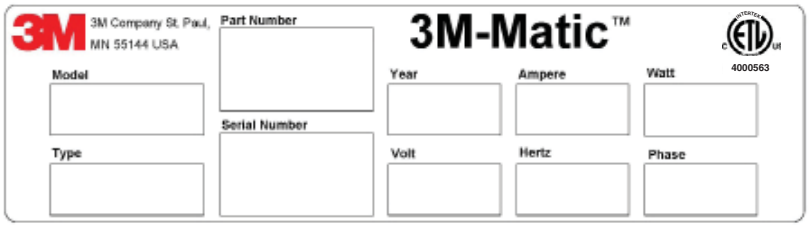

Minimum billing on parts orders will be $25.00. Replacement part prices available on request.
$10.00 restocking charge per invoice on returned parts

Note : Outside the U.S., contact the local 3M subsidiary for parts ordering information.

3M Industrial Adhesives and Tapes
3M Center, Building 220-5E-06
St. Paul, MN 55144-1000

3M-Matic™, AccuGlide™ and Scotch™ are Trademarks of 3M St. Paul, MN 55144-1000
Printed in U.S.A.

THIS PAGE IS BLANK

To Our Customers:

This is the 3M-Matic™/AccuGlide™/Scotch® equipment you ordered. It has been set up and tested in the factory with Scotch® tapes. If any problems occur when operating this equipment and you desire a service call or phone consultation, call, write, or fax the appropriate number listed below.

Included with each machine is an Instructions and Parts List manual.

SERVICE, REPLACEMENT PARTS, AND ADDITIONAL MANUALS AVAILABLE DIRECT FROM:

Order parts by part number, part description, and quantity required. Also, when ordering parts or additional manuals, include model/machine name, machine type, and serial number that are located on the identification plate.

3M Industrial Adhesives and Tapes
3M Center, Building 220-5E-06
St. Paul, MN 55144-1000

3M-Matic™, AccuGlide™ and Scotch™ are Trademarks of 3M, St. Paul, MN 55144-1000
Printed in U.S.A.

THIS PAGE IS BLANK

Instruction Manual

AccuGlide™ 3 High Speed 2 Inch
Upper and Lower Taping Heads
Type 10800

Table of Contents **Page**

Replacement Parts and Service Information ..... i - ii

Table of Contents iii

Equipment Warranty and Limited Remedy iv

Intended Use 1

Taping Head Contents / How to Use Manual 3

Important Safeguards ..... 4 - 5

Specifications ..... 6 - 7
- Dimensional Drawing 7

Installation 8
- Receiving and Handling 8
- Installation Guidelines 8
- Tape Leg Length 8
- Tape Width Adjustment 8

Operation ..... 9 - 11
- Tape Loading – Upper Taping Head 10
- Tape Loading – Lower Taping Head ..... 10 - 11

Maintenance ..... 12 - 13
- Blade Replacement 12
- Blade Guard 12
- Blade Oiler Pad 12
- Cleaning 13
- Applying/Buffing Roller Replacement 13

Adjustments ..... 14 - 16
- Tape Latch Alignment 14
- Tape Drum Friction Brake 14
- Applying Mechanism Spring 15
- One-Way Tension Roller 15
- Tape Leg Length 16
  - Leading Tape Leg Length Adjustment 16
  - Changing Tape Leg Length From 70 to 50 mm [2-3/4 to 2 Inch] 16

Troubleshooting Guide ..... 17 - 18

Spare Parts/Service Information 19
- Recommended Spare Parts 19
- Replacement Parts and Service 19

Replacement Parts Illustrations and Parts List ..... Yellow Section 20 - 37

Equipment Warranty and Limited Remedy:

Equipment Warranty and Limited Remedy: THE FOLLOWING WARRANTY IS MADE IN LIEU OF ALL OTHER WARRANTIES, EXPRESS OR IMPLIED, INCLUDING, BUT NOT LIMITED TO, ANY IMPLIED WARRANTY OF MERCHANTABILITY OR FITNESS FOR A PARTICULAR PURPOSE AND ANY IMPLIED WARRANTY ARISING OUT OF A COURSE OF DEALING, CUSTOM OR USAGE OF TRADE:

3M sells its **AccuGlide™ 3 High Speed 2 Inch Upper and Lower Taping Heads, Type 10800** with the following warranty:

1. The Taping Head blade, springs and rollers will be free from defects in material and manufacture for ninety (90) days after delivery.
2. All other Taping Head parts will be free from defects in material and manufacture for three (3) years after delivery.

If any part is defective within this warranty period, your exclusive remedy and 3M's and seller's sole obligation shall be, at 3M's option, to repair or replace the part. 3M must receive actual notice of any alleged defect within a reasonable time after it is discovered, but in no event shall 3M have any obligation under this warranty unless it receives such notice within five (5) business days after the expiration of the warranty period. All notices required hereunder shall be given to 3M solely through the 3M-Matic™ Help line (800-328-1390). To be entitled to repair or replacement as provided under this warranty, the part must be returned as directed by 3M to its factory or other authorized service station designated by 3M. If 3M is unable to repair or replace the part within a reasonable time after receipt thereof, 3M, at its option, will replace the equipment or refund the purchase price. 3M shall have no obligation to provide or pay for the labor required to remove any part or equipment or to install the repaired or replacement part or equipment. 3M shall have no obligation to repair or replace those parts failing due to normal wear, inadequate or improper maintenance, inadequate cleaning, non-lubrication, improper operating environment, improper utilities, operator error or misuse, alteration or modification, mishandling, lack of reasonable care, or due to any accidental cause.

Limitation of Liability: Except where prohibited by law, 3M and seller will not be liable for any loss or damage arising from this 3M equipment, whether direct, indirect, special, incidental, or consequential, regardless of the legal theory asserted, including breach of warranty, breach of contract, negligence, or strict liability.

Note: The foregoing Equipment Warranty and Limited Remedy and Limitation of Liability may be changed only by a written agreement signed by authorized representatives of 3M and seller.

AccuGlide™, Scotch™, and 3M-Matic™ are Trademarks of 3M, St. Paul, Minnesota 55144-1000

Intended Use

The intended use of the AccuGlide™ 3 Upper and Lower Taping Heads - 2 Inch is to apply a "C" clip of Scotch® pressure-sensitive film box sealing tape to the top and/or bottom center seam of regular slotted containers.

These taping heads are incorporated into most standard 3M-Matic™ case sealers. The compact size and simplicity of the taping head also makes it suitable for mounting in box conveying systems other than 3M-Matic™ case sealers. This includes replacement of other types of taping, gluing or stapling heads in existing case sealing machines. The AccuGlide™ 3 Upper and Lower Taping Heads - 2 Inch have been designed and tested for use with Scotch® pressure-sensitive film box sealing tape.

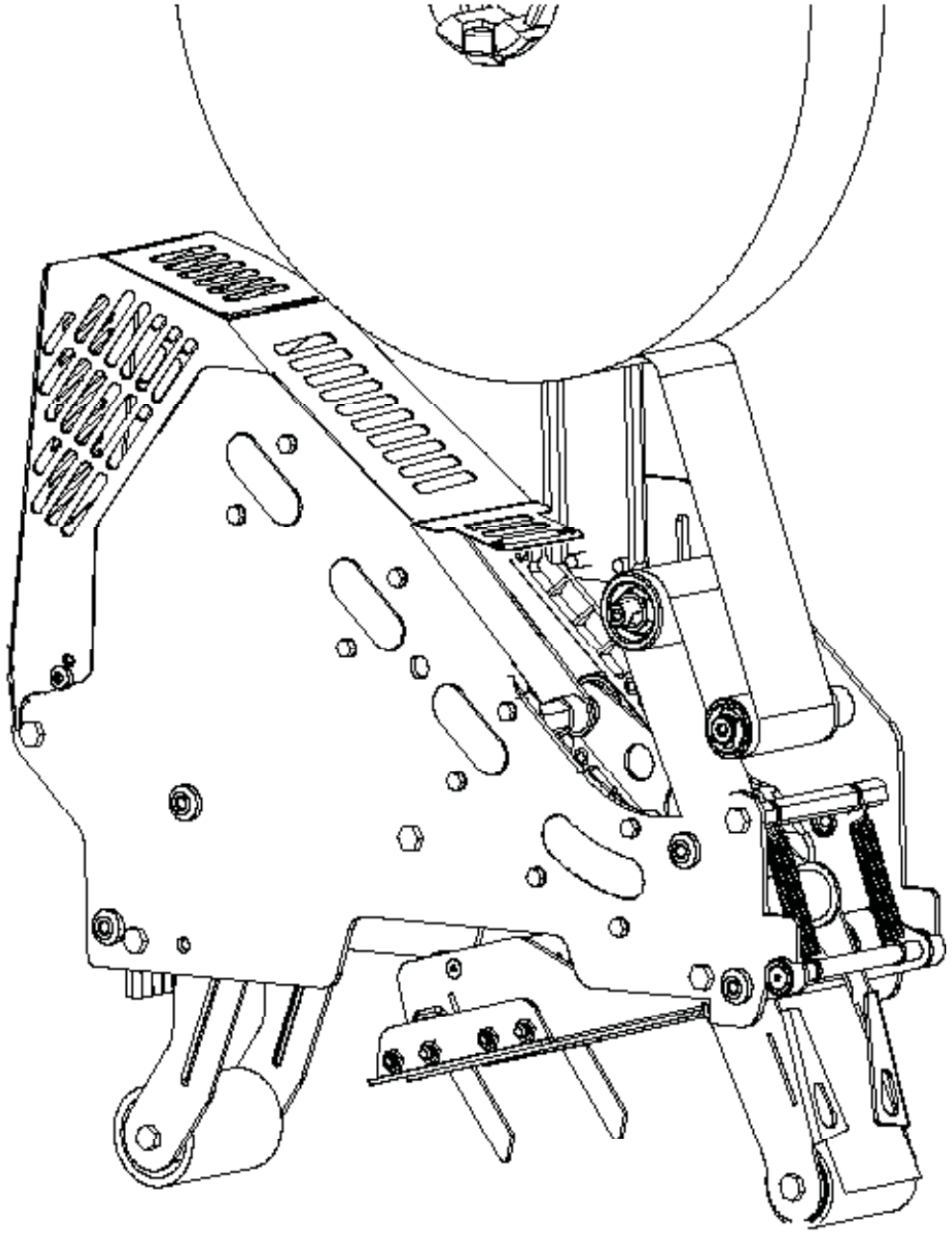

AccuGlide™ 3 Upper Taping Head - 2 inch, Type 10800

THIS PAGE IS BLANK

Taping Head Contents

AccuGlide™ 3 High Speed 2 Inch Upper and Lower Taping Heads consist of:

Qty.	Part Name
1	Taping Head Assembly
1	Tape Drum and Bracket Assembly
1	Hardware and Spare Parts Kit
1	Threading Tool

General Information

This instruction manual covers safety aspects, handling and transport, storage, unpacking, preparation, installation, operation, set-up and adjustments, technical and manufacturing specifications, maintenance, troubleshooting, repair work and servicing, electric diagrams, warranty information, disposal (ELV), a glossary with a definition of symbols, plus a parts list of the 3M-Matic™ Accugllide 3 (2 inch) 3M Industrial Adhesives and Tapes Division 3M Center, Bldg. 220-5E-06 St. Paul, MN 55144-1000 (USA) Edition January 2012/Copyright 3M 2012. All rights reserved The manufacturer reserves the right to change the product at any time without notice.

How to use this Manual

The manual is an important part of the machine; all information contained herein is intended to enable the equipment to be maintained in perfect condition and operated safely. Ensure that the manual is available to all operators of this equipment and the manual is kept up to date with all subsequent amendments. Should the equipment be sold or disposed of, please ensure that the manual is passed on with the machine.

Electrical and pneumatic diagrams are included in the manual. Equipment using PLC controls and/or electronic components will include relevant schematics or programs in the enclosure (or will be delivered separately as needed)

Keep the manual in a clean and dry place near the machine. Do not remove, tear or rewrite parts of the manual for any reason. Use the manual without damaging it. However, if the manual has been lost or damaged, ask your after sale service for a new copy (if it is possible, please have the manual name, part number, and revision information and/or model/machine name, machine type, and serial number) that are located on the identification plate **(For example: Model 200a - Accuglide 3 - 2" - Type 10800 - Serial Number 13282).**

Note:
All the important warning notes related to the operation of the machine are identified by the symbol:

Updating the Manual

Modifications to the machine are subject to manufacturer's internal procedures. The user may receive pages or parts of the manual which contain amendment made after its first publication. The user must use them to update this manual.

This safety alert symbol identif es important safety messages in this manual. READ AND UNDERSTAND THEM BEFORE INSTALLING OR OPERATING THIS EQUIPMENT.

Explanation of Signal Word Consequences

CAUTION: Indicates a potentially hazardous situation, which, if not avoided, may result in minor or moderate injury and/or property damage.

WARNING: Indicates a potentially hazardous situation, which, if not avoided, could result in death or serious injury and/or property damage.

WARNING

- **To reduce the risk associated with mechanical hazards:**
  - Read, understand and follow all safety and operating instructions before operating or servicing the case sealer
  - Allow only properly trained and qualified personnel to operate and/or service this equipment
- **To reduce the risk associated with shear, pinch, and entanglement hazards:**
  - Turn air and electrical supplies off on associated equipment before performing any adjustments, maintenance, or servicing the taping heads
  - Never attempt to work on the taping head or load tape while the box drive system is running
- **To reduce the risk associated with sharp blade hazards:**
  - Keep hands and fingers away from tape cutoff blades under orange blade guards. The blades are extremely sharp.

CAUTION

- **To reduce the risk associated with muscle strain:**
  - Use proper body mechanics when removing or installing taping heads that are moderately heavy or may be considered awkward to lift
- **To reduce the risk associated with impact hazards:**
  - Place the taping head on a smooth level surface when maintaining or servicing this equipment

(Important Safeguards continued on next page)

Important - In the event the following safety labels are damaged or destroyed, they must be replaced to ensure operator safety. See "Replacement Parts Illustrations and Parts Lists" for label part numbers.

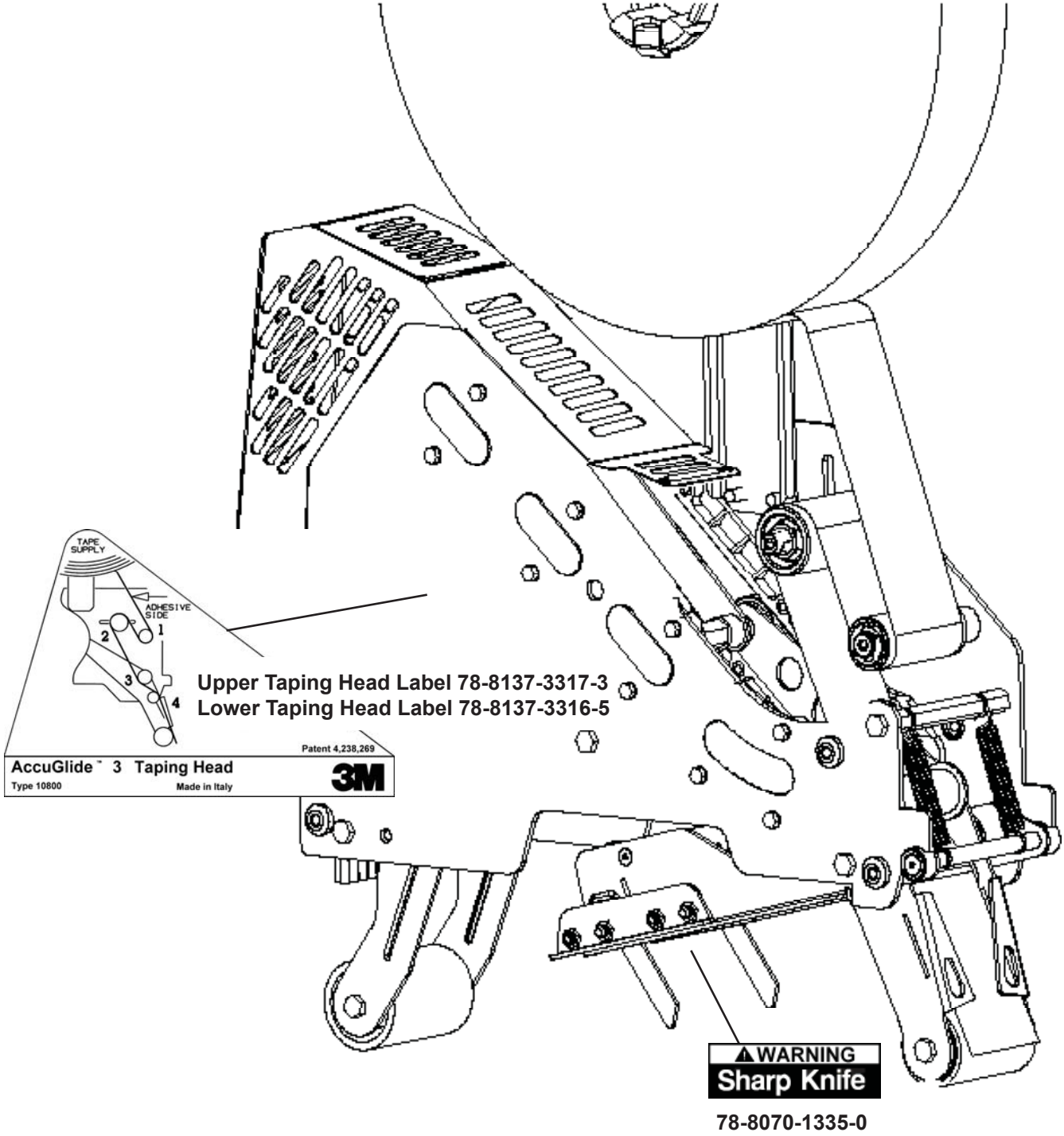

Figure 1-1 Replacement Labels/3M Part Numbers

Specifications

1. **Tape:**

   For use with Scotch® pressure-sensitive film box sealing tapes.

2. **Tape Width:**

   36mm or 1-1/2 inches minimum to 48mm [2 inches] maximum.

3. **Tape Roll Diameter:**

   Up to 405mm [16 inches] maximum on a 76.2mm [3 inch] diameter core.
   (Accommodates all system roll lengths of Scotch® film tapes.)

4. **Tape Application Leg Length - Standard:**

   70mm ± 6mm [2-3/4 inches ±1/4 inch]

   Tape Application Leg Length - Optional:

   50mm ± 6mm [2 inches ± 1/4 inch] (See "Adjustments – Tape Leg Length.")

5. **Box Size Capacities:**

   For use with center seam regular slotted containers.

   Length – 443mm [17.44 inches] w/ Guard

   Height – 406mm [16 inches] w/ Guard

   Width – 107mm [4.2 inches]

   When upper and lower taping heads are used on **"3M-Matic"** case sealers, refer to the respective instruction manual specifications for box weight and size capacities.

6. **Operating Rate:**

   Conveyor speeds up to 0.5 m/s [100 feet per minute].

7. **Operating Conditions:**

   Use in dry, relatively clean environments at 5° to 40°C [40° to 105°F] with clean dry boxes.

   Important – Taping heads should not be washed down or subjected to conditions causing moisture condensation on components.

8. **Taping Head Dimensions:**

Length	–	442mm [17 3/8 inches]
Height	–	648mm [25 1/2 inches] (with tape drum)
Width	–	105mm [4-1/8 inches] (without mounting spacers)
Weight	–	Packaged: 8.6kg [19 lbs.] Unpackaged: 7.7kg [17 lbs.]

(Specifications continued on next page.)

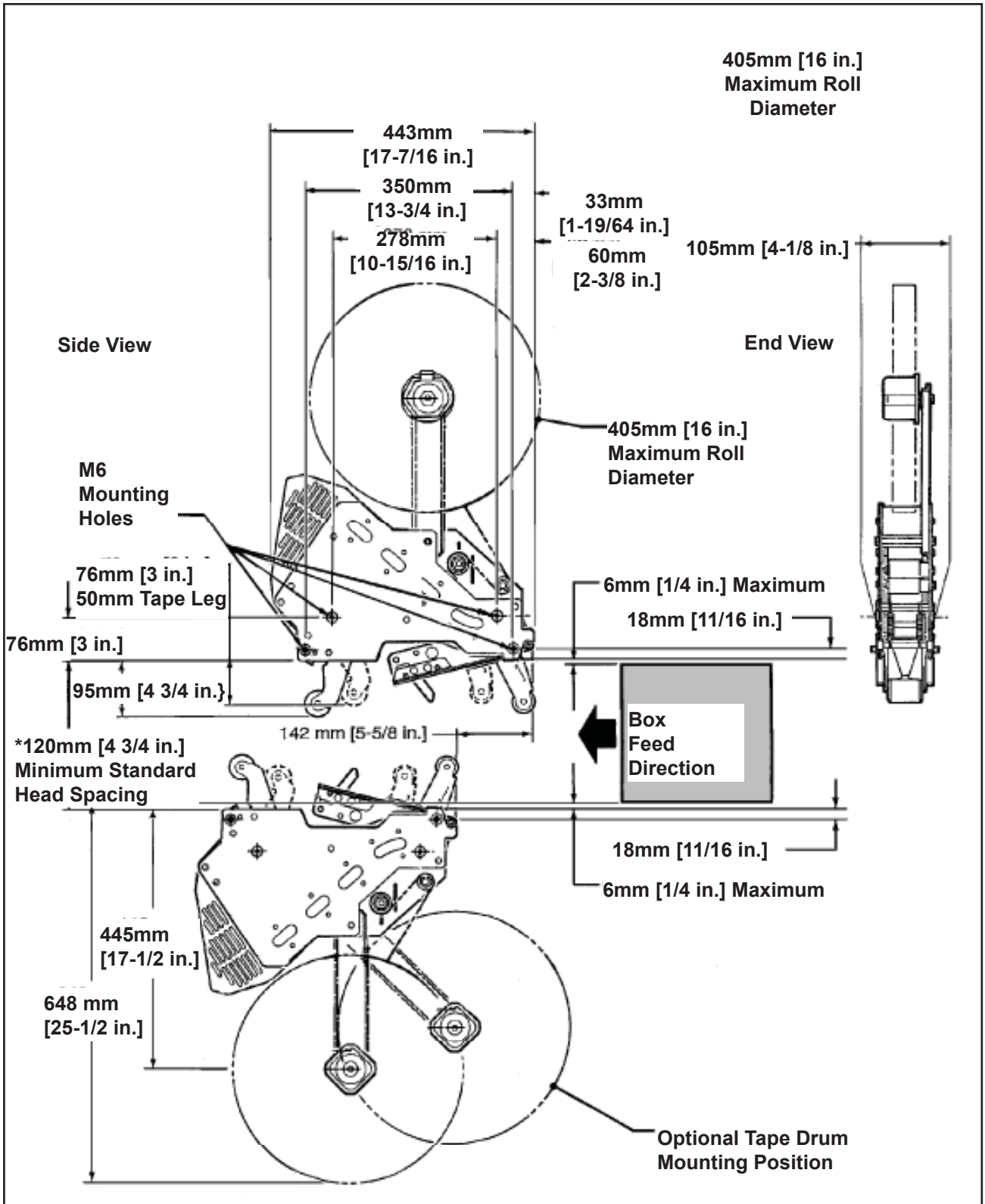

*** This dimension can be reduced to 90mm [3-1/2 in.] when both heads are converted to 50mm [2 in.] tape leg lengths.**

Figure 2/1 Dimensional Drawing

WARNING

- **To reduce the risk associated with sharp blade hazards:**
- Keep hands and fingers away from tape cutoff blades under orange blade guards. The blades are extremely sharp

Receiving And Handling

After the taping head assembly has been unpackaged, examine the unit for damage that might have occurred during transit. If damage is evident, file a damage claim immediately with the transportation company and also notify your 3M Representative.

Installation Guidelines

The taping head assembly can be used in converting existing or in custom made machinery. It can be mounted for top taping or bottom taping. Refer to "Box Size Capacities," as well as **Figure 2-1** in the Specifications section, for the following points in making such installations:

CAUTION

- **To reduce risk associated with muscle strain:**
- Use proper body mechanics when removing or installing taping heads that are moderately heavy or may be considered awkward to lift

Important – Always conduct a hazard review to determine appropriate guarding requirements when the installation is in an application other than 3M-Matic™ equipment

1. The box conveying system must positively propel the box in a continuous motion, not exceeding 0.40 m/s [80 feet per minute], past the taping head assembly since the box motion actuates the taping mechanism.
2. If a pusher or cleated conveyor is being used, steps should be taken in the conveyor design to prevent the pusher from contacting the applying or buffing roller arms resulting in damage to the taping head.
3. **Figure 2-1** illustrates the typical mounting relationship for opposing taping head assemblies to allow taping of box heights down to 90mm [3-1/2 inches]. To tape box heights down to 70mm [2-3/4 inches], the taping heads must be completely staggered so only one tape seal is being applied at one time.

Note – AccuGlide™ 3 High Speed Upper Taping Head is supplied with a buffing arm guard. Adjustments to this guard may be required to install the taping head into some older design 3M-Matic™ case sealers.

4. Mounting studs are provided with the taping head, but special installations may require alternate means for mounting.
5. Box hold-down or guide skis should be provided and the taping head mounted so that the side plates are 6mm [1/4 inch] maximum away from the ski surface on which the box rides.

Tape Leg Length

Taping heads are factory set to apply standard 70mm [2-3/4 inch] tape legs. The heads can be converted to apply 50mm [2 inch] tape legs if desired but both upper and lower heads must be set to apply the same tape leg length. See "Adjustments – Changing Tape Leg Length From 70 to 50mm [2-3/4 to 2 Inches]."

Also, the conveyor speed at which the product moves through the taping heads, affects the leading and trailing tape leg length. See "Adjustments section – Leading Tape Leg Length Adjustment."

Tape Width Adjustment

Taping heads are factory set to apply 48mm [2 inch] wide tape. If it is necessary to align the tape or to apply narrower tapes, refer to "Adjustments – Tape Web Alignment" for set-up procedure.

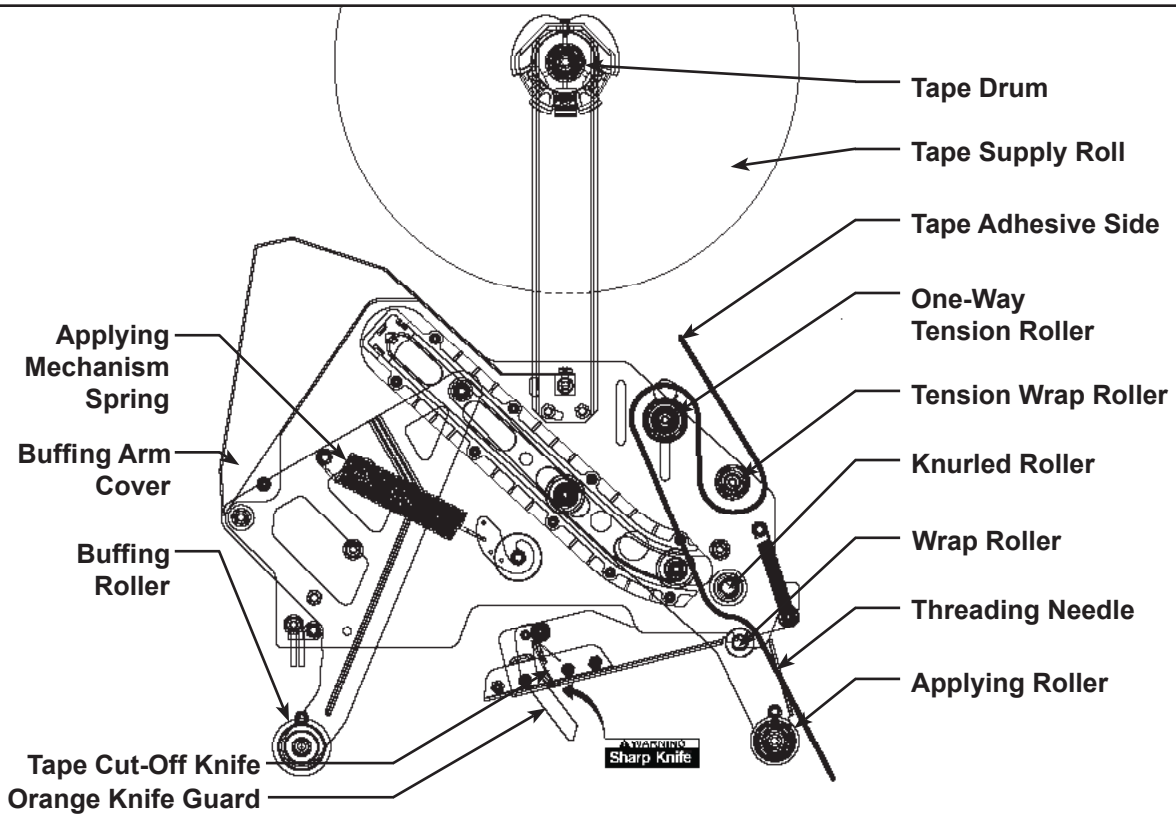

Figure 3-1 Taping Head Components/Threading Diagram - Upper Head (Left Side) View)

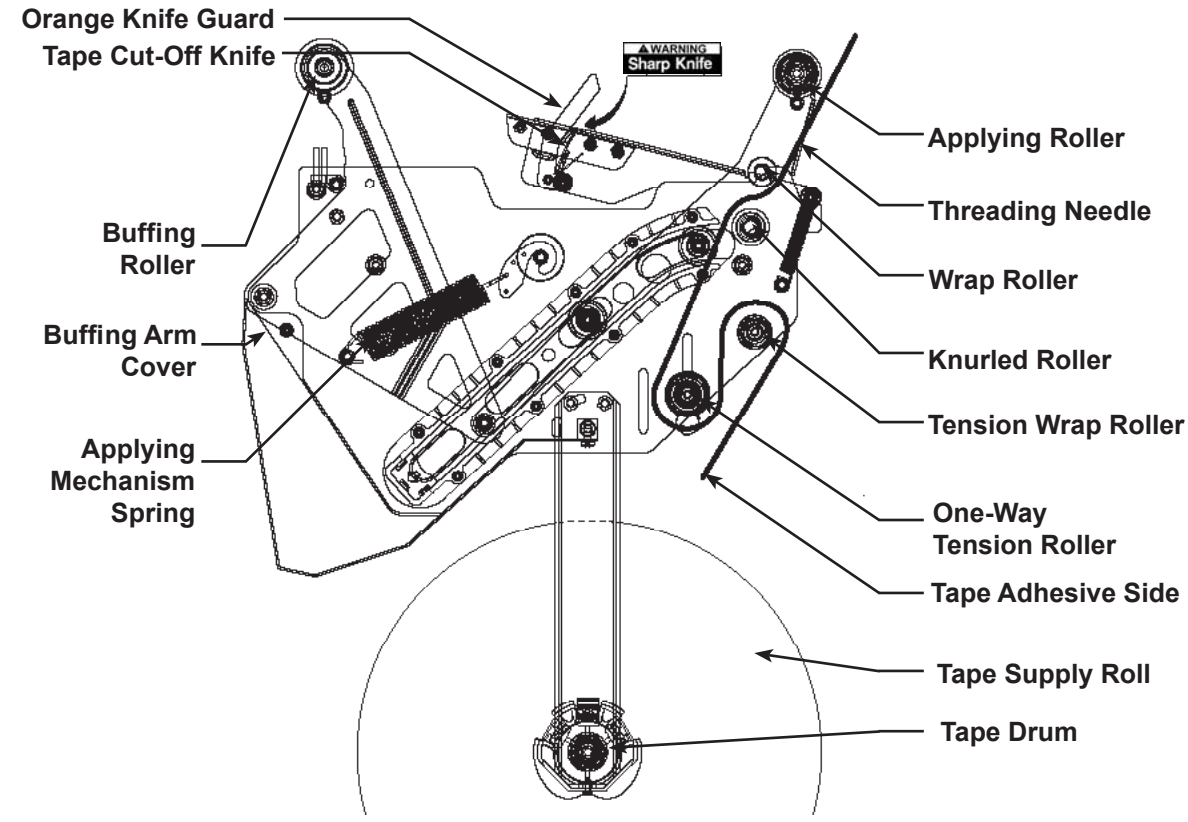

Figure 3-2 Taping Head Components/Threading Diagram - Lower Head (Left Side) View)

WARNING

- **To reduce the risk associated with shear, pinch, and entanglement hazards:**
- − Turn air and electrical supplies off on associated equipment before performing any adjustments, maintenance, or servicing the machine or taping heads
- − Never attempt to work on the taping heads or load tape when the box drive system is running
- **To reduce the risk associated with sharp blade hazards:**
- − Keep hands and fingers away from tape cutoff blades under orange blade guards. The blades are extremely sharp

It is recommended that the detailed instructions and sketches in this manual be referred to the first few times the taping head is loaded/threaded until the operator becomes thoroughly familiar with the tape loading operation.

Note – Remove tape roll before removing taping head from machine to minimize weight.

CAUTION

- **To reduce the risk associated with muscle strain:**
- − Use proper body mechanics when removing or installing taping heads that are moderately heavy or may be considered awkward to lift
- **To reduce the risk associated with impact hazards:**
- − Place the taping head on a smooth level surface when maintaining or servicing this equipment

Tape Loading – Upper Taping Head

1. Place the upper taping head in a convenient working position.
2. Use **Figures 3-3 to 3-5** and tape threading label. Position the tape supply roll so the adhesive side of tape is facing the front of the taping head as it is pulled from the supply roll.
3. Attach the threading needle to the end of the roll. Guide the threading needle around the wrap roller (Position 1) then back around the one-way tension roller (Position 2).
4. Continue pulling the threading needle down and guide it between the two rollers on the apply arm (Position 3).
5. Pull the threading needle down until the tape travels between the apply plate and the ears of the apply arm (Position 4) until it extends past the applying roller. When properly threaded the adhesive side of the tape should be facing the knurled rollers at position 2 and also position 3.
6. Cut away any excess tape.

Important – Do not cut against the apply roller - roller damage could occur.

Tape Loading – Lower Taping Head

1. Remove the lower taping head from the conveyor bed or associated equipment and place it a convenient working position.
2. The lower taping head is loaded and threaded in the same manner as the upper head. Follow the upper taping head tape loading/threading procedure.

Figure 3-3

Insert threading needle through rollers in direction indicated by arrows.

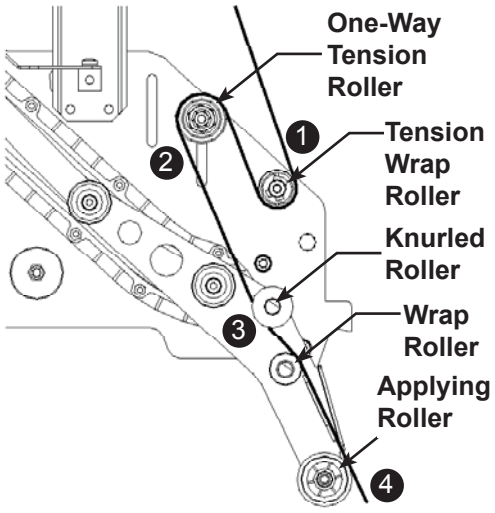

Figure 3-3 – Tape Loading/Threading

Figure 3-4

Place tape roll on tape drum to dispense tape with adhesive side forward. Seat tape roll fully against back flange of drum. Adhere tape lead end to threading needle as shown.

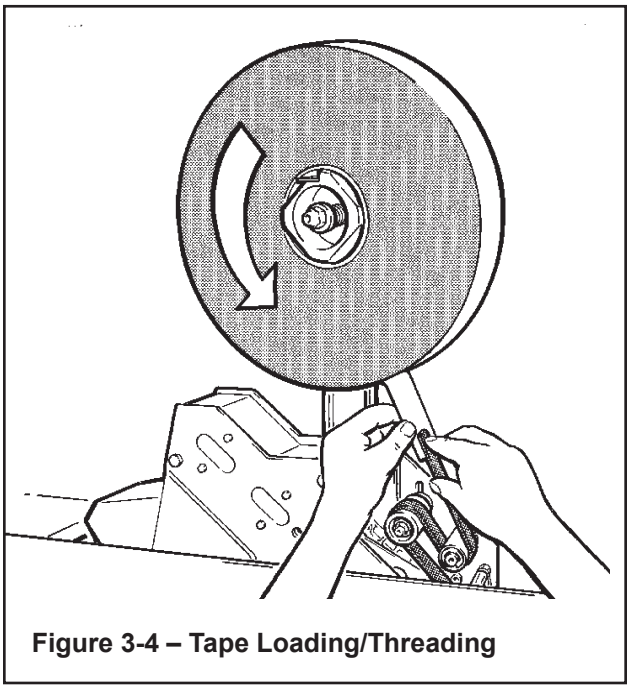

Figure 3-4 – Tape Loading/Threading

WARNING

- **To reduce the risk associated with sharp blade hazards:**
- Keep hands and fingers away from tape cutoff blades under orange blade guards. The blades are extremely sharp.

Manually turn tape roll to create slack tape while pulling threading needle through tape applying mechanism until needle is through and tape is in alignment with applying roller.

Excess tape can be cut with a scissors at applying roller.

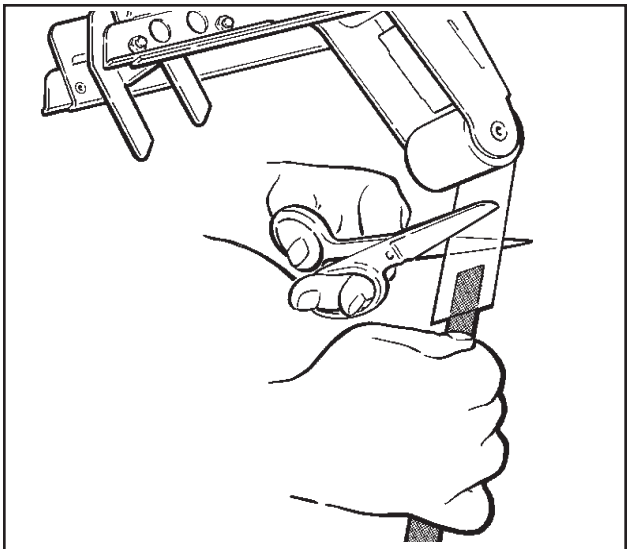

Figure 3-5 – Tape Loading/Threading

WARNING

- **To reduce the risk associated with shear, pinch, and entanglement hazards:**
- − Turn air and electrical supplies off on associated equipment before performing any adjustments, maintenance, or servicing the taping heads
- − Never attempt to work on the taping head or load tape while the box drive system is running
- **To reduce the risk associated with sharp blade hazards:**
- − Keep hands and fingers away from tape cutoff blades under orange blade guards. The blades are extremely sharp

The AccuGlide™ 3 High Speed 2 Inch Taping Head has been designed for long, trouble free service. The taping head will perform best when it receives routine maintenance and cleaning. Taping head components that fail or wear excessively should be promptly repaired or replaced to prevent damage to other portions of the head or to the product.

Blade Replacement, Upper and Lower Taping Heads – **Figure 4-1**

WARNING

- **To reduce the risk associated with sharp blade hazards:**
- Keep hands and fingers away from tape cutoff blades under orange blade guards. The blades are extremely sharp.

1. Loosen, but do not remove, the blade screws (A). Remove and discard old blade.
2. Mount the new blade (B) with the beveled side away from the blade holder.

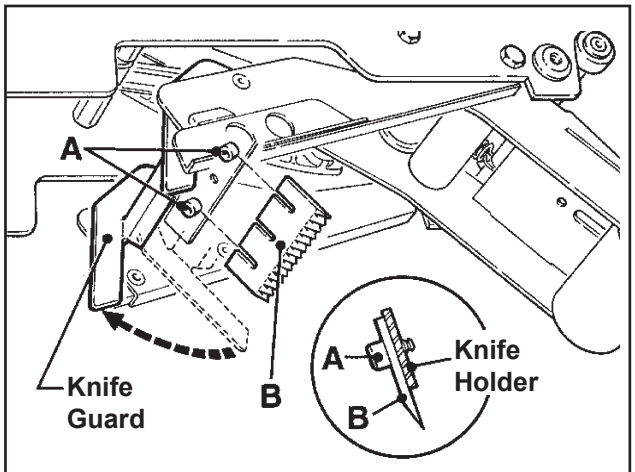

Figure 4-1 – Blade Replacement

3. Bottom the blade slots against the screws. (This will position the blade at the correct angle.) Tighten the blade screws to secure the blade.

Note – Check the blade position to insure proper clearance between blade and guard by slowly pivoting the blade guard back.

Blade Guard

The blade guard covers the blade whenever a box is not being taped. Periodically check to be sure the blade guard is functioning properly and returning to cover the blade. Replace any defective parts.

Blade Oiler Pad

WARNING

- **To reduce the risk associated with sharp blade hazards:**
- Keep hands and fingers away from tape cutoff blades under orange blade guards. The blades are extremely sharp.

To reduce adhesive build-up, the taping heads are equipped with a factory pre-lubricated felt oiler pad that provides a film of oil on the cutting edge of the blade. Blade maintainance should include keeping the felt oiler pad saturated with SAE #30 non-detergent oil.

Should tape adhesive build-up occur on blade, carefully wipe clean with an oily cloth.

(Maintenance continued on next page.)

WARNING

- **To reduce the risk associated with shear, pinch, and entanglement hazards:**
- − Turn air and electrical supplies off on associated equipment before performing any adjustments, maintenance, or servicing the taping heads
- − Never attempt to work on the taping head or load tape while the box drive system is running
- **To reduce the risk associated with sharp blade hazards:**
- − Keep hands and fingers away from tape cutoff blades under orange blade guards. The blades are extremely sharp

Cleaning

Regular slotted containers produce a great deal of dust and paper chips when conveyed through taping heads. If this dust is allowed to build-up on the heads, it can cause wear on the moving parts. Excessive dirt build-up should be wiped off with a damp cloth. Cleaning should be done once per month, depending on the number and type of boxes used. If the boxes used are dirty, or if the environment in which the heads operate is dusty, cleaning on a more frequent basis may be necessary.

Note – Never attempt to remove dirt from taping heads by blowing it out with compressed air. This can cause the dirt to be blown inside the components onto sliding surfaces. Dirt in these areas can cause serious equipment damage. Never wash down or subject taping heads to conditions causing moisture condensation on components. Serious equipment damage could result.

Applying/Buffing Roller Replacement

Replacing roller requires removal of shaft and mounting screws. With no area on the shaft to grip, the shaft often turns when attempting to remove the second screw.

To ease removal of second screw, a 5mm hex socket has been provided at the bottom of the threads in both ends of the shaft. Insert a 4mm hex key wrench into this socket after removing one screw to hold the shaft for removal of the second screw. See **Figure 4-2.**

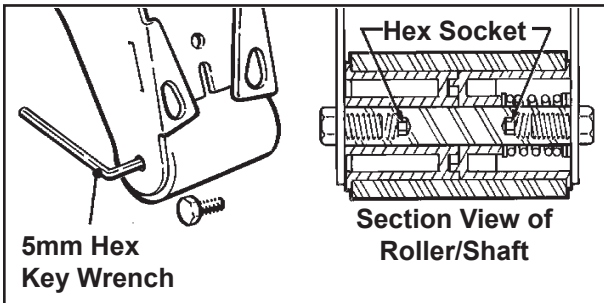

Figure 4-2 – Roller Shaft Section View

WARNING

- **To reduce the risk associated with shear, pinch, and entanglement hazards:**
- Turn air and electrical supplies off associated equipment before performing any adjustments, maintenance, or servicing the machine or taping heads.
- Never attempt to work on the taping head or load tape while the box drive system is running

Tape Latch Alignment – Figure 5-1

The Latching tape drum assembly is pre-set to accommodate 48mm [2 inch] wide tape. The tape drum assembly is adjustable to provide alignment of narrower tapes.

To move the latch to a position that corresponds to a new tape core width **(Figure 5-1):**

1. Remove screw from the latch.
2. Move to the latch to the position that corresponds to the tape core width.
3. Replace screw in the new latch location.

To adjust or center the tape width on the centerline of the taping head, and therefore box center seam, **(Figure 5-2):**

1. Loosen the locking hex nut behind tape drum bracket on tape drum shaft. Use an adjustable wrench or 25mm open end wrench.
2. Turn tape drum shaft in or out to center the tape web (use 5mm hex wrench).
3. Tighten locking hex nut to secure the adjustment.

No other components require adjustment for tape web alignment.

Tape Drum Friction Brake – Figure 5-3

The tape drum friction brake on each taping head is pre-set for normal operation to prevent tape roll over travel. Should tension adjustment be required, turn the self-locking nut on the shaft to vary compression of the spring. Turn the nut clockwise to increase the braking force, and counterclockwise to decrease the braking force. Adjust brake to minimum tension to prevent excessive tape roll over travel.

Note – Excess braking force will cause poor tape application and may lead to tape tabbing on the trailing tape leg.

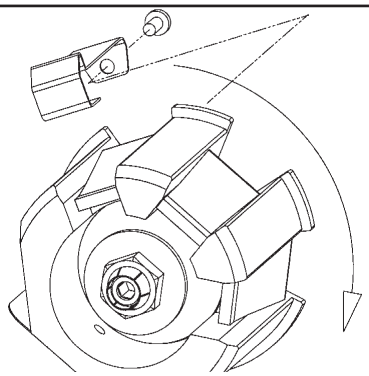

Figure 5-1 – Tape Latch Alignment

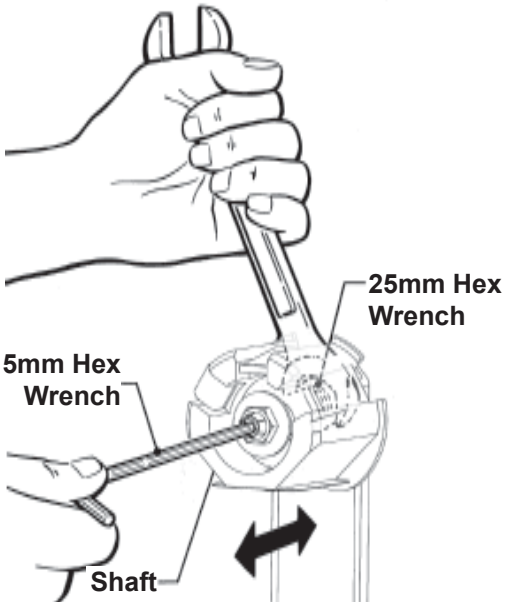

Figure 5-2 – Tape Web Alignment

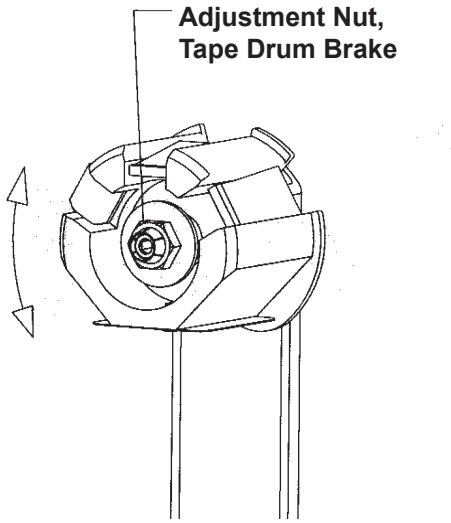

Figure 5-3 – Tape Drum Friction Brake

(Adjustments continued on next page.)

WARNING

- **To reduce the risk associated with shear, pinch, and entanglement hazards:**
- Turn air and electrical supplies off associated equipment before performing any adjustments, maintenance, or servicing the machine or taping heads.
- Never attempt to work on the taping head or load tape while the box drive system is running

Applying Mechanism Spring

To obtain access to the spring, remove the taping head cover (four mounting screws). Replace cover when finished.

The applying mechanism spring, shown in **Figures 5-4A and 5-4B**, controls applying and buffing roller pressure on the box and returns the mechanism to the reset position. The spring pressure is pre-set, as shown in **Figure 5-4A** for normal operation, but is adjustable.

If a tape gap appears on the trailing surface of the box increase spring pressure. If the front of the box is being crushed by the applying roller decrease spring pressure.

Removing the spring end loop from the spring holder and placing loop in other holes provided, as shown in **Figure 5-4B**, will adjust the spring pressure.

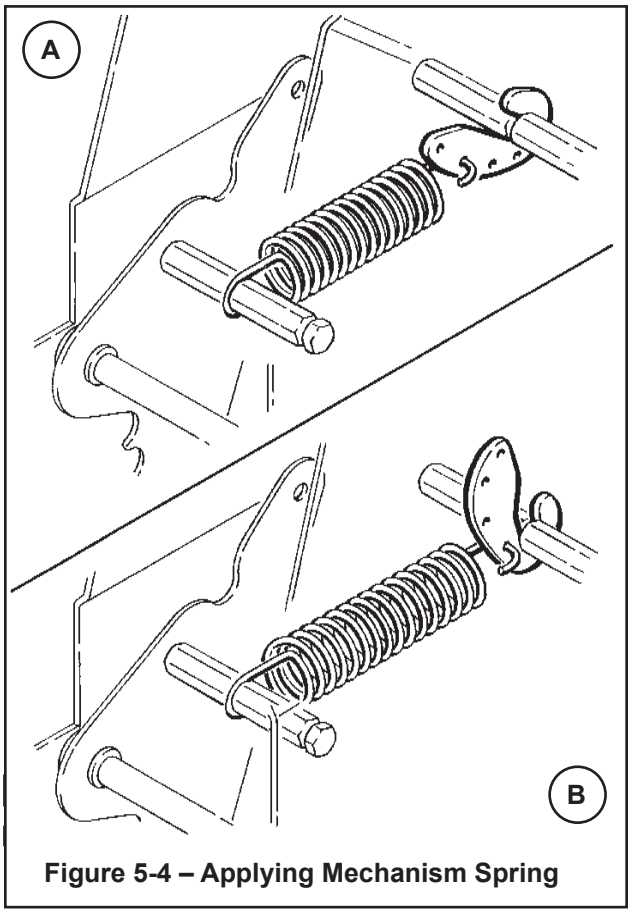

Figure 5-4 – Applying Mechanism Spring

One-Way Tension Roller
Figure 5-5

The one-way tension roller is factory set. When replacing this assembly, the roller must have 0,5 kg [1 lb.] minimum tangential force when turning.

To Adjust Tension:

1. Wrap a cord or small strap (non-adhesive) 4-6 turns around the tension roller.
2. Attach a spring scale to the end of the cord or strap.
3. Turn the adjusting nut with the socket wrench provided, until a force of approximately 0.5 kg to 0.9 kg [1 to 2 lbs.] is required to turn the roller by pulling on the spring scale.

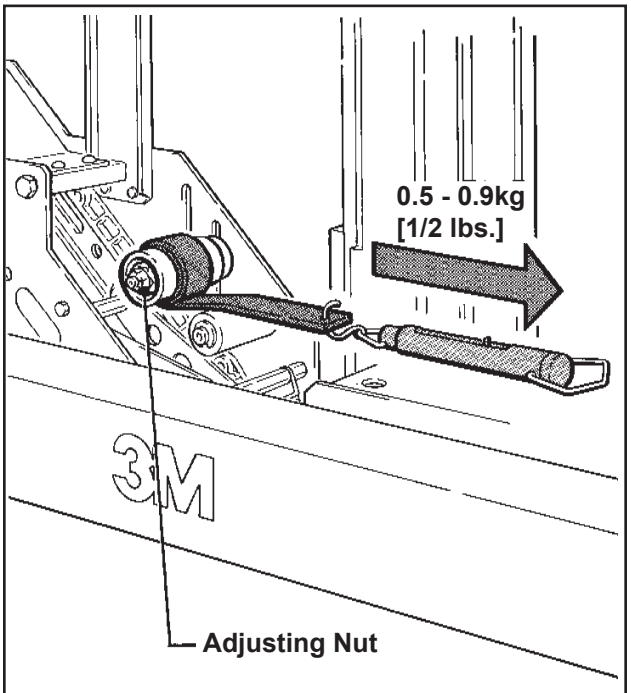

Figure 5-5 – One-Way Tension Roller

(Adjustments continued on next page.)

WARNING

- **To reduce the risk associated with shear, pinch, and entanglement hazards:**
- Turn air and electrical supplies off associated equipment before performing any adjustments, maintenance, or servicing the machine or taping heads.
- Never attempt to work on the taping head or load tape while the box drive system is running

Tape Leg Length

WARNING

- **To reduce the risk associated with sharp blade hazards:**
- Keep hands and fingers away from tape cutoff blades under orange blade guards. The blades are extremely sharp.

Leading Tape Leg Length Adjustment – Figure 5-6

The one-way tension roller position is adjustable to control the leading tape leg length.

Moving this roller farther away from the box top or bottom surface will decrease the leading leg length. Moving it closer to the box top or bottom surface will increase the leading leg length.

Changing Tape Leg Length from 70 to 50mm [2-3/4 to 2 Inches] – Figure 5-7

Note – When changing tape leg length, both upper and lower heads must be adjusted to apply the same leg lengths.

1. Remove and retain two hex head screws and remove the brush from normal position “A” on side frame.
2. Remount and secure brush in position “A-A” on side frame forward of normal location using original fasteners.
3. Remove cut-off bracket extensions from position "B".
4. Remount cut-off bracket extensions in forward position “B-B”.
5. Remove and retain the one-way tension roller assembly from slot “C” in frame.
6. Remount tension roller assembly near top of slot “C-C” in frame using original fasteners.
7. Adjust tension roller according to "Leading Tape Leg Length Adjustment" above.

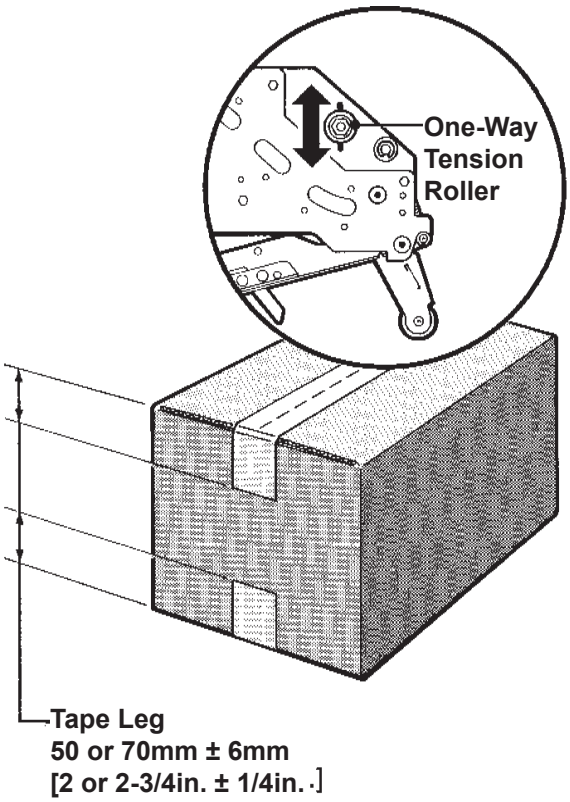

Figure 5-6 – Leading Tape Leg Length

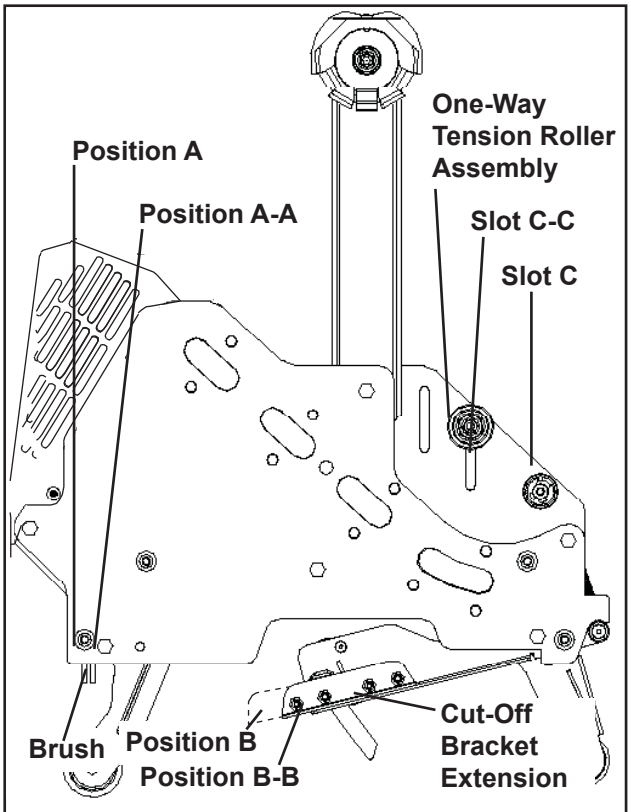

Figure 5-7 – Changing Tape Leg Length

Troubleshooting Guide

Problem	Cause	Correction
The tape leg on the front of the case is too long	The tape is threaded incorrectly	The tape must go around the wrap roller before going around the one-way tension roller
	The tape tension is too low	Adjust the one-way tension roller
	The knurled roller drags	Check for adhesive build-up between the knurled roller and its shaft. Clean and lubricate shaft. Remove all lubricant from roller surfaces.
	Tape tracks to one side or drags on the support tabs of applying frame	Adjust the tape web alignments
	The one-way tension roller is not correctly positioned	Position the roller in its mounting slot so that the tape extends just beyond the centerline of the applying roller
	Taping head is not set up properly	Check leg length adjustments
The blade does not cut tape or the tape end is jagged or shredded	The blade is dull and/or has broken teeth	Replace the blade
	Tape tension is insufficient	Increase tape tension by adjusting the one-way tension roller
	Adhesive has built up on the blade	Clean and adjust the blade
	The blade is not positioned properly	Make sure the blade is bottomed out against the mounting bolts
	The blade is dry	Lubricate the blade oiler pad on the blade guard
	The blade is in backwards	Mount the blade so that the beveled edge is away from the entrance of the head
	One or both cutter springs are missing or stretched	Replace the defective spring(s)
	Tension roller surface is not fully contacting the taping head frame	Make sure one-way bearing is below the surface of the tension roller. If not, press bearing further into roller or replace roller.

Troubleshooting Guide

Problem	Cause	Correction
Tape is tabbing on the trailing leg on the back of the box	There is excess tension on the tape drum assembly and/or the one-way tension roller assembly	Adjust the one-way tension roller and/or the tape drum assembly
	Rollers in the tape path do not rotate freely	Clean adhesive deposits from the surface, ends, and shafts of the rollers. Then lubricate roller shafts. Remove all lubricant from roller surfaces.
	The blade is not cutting tape properly	Refer to tape cutting problems
	The tape is threaded incorrectly	Re thread the tape
	Applying mechanism spring has too little tension	Move spring hook to next tighter hole
The tape end does not stay in application position in front of the applying roller	The tape is incorrectly threaded	Re thread the tape
	Flanged knurled roller overruns on return of applying mechanism to its rest position	Adjust tension roller position in mounting slot to lengthen tape leg
	Applying roller overruns on return of applying mechanism to its rest position	There should be a slight drag when rotating the applying roller. If not, check friction springs and/ or friction pins and replace if necessary
	The one-way tension roller is not correctly positioned	Position roller in it mounting slot so that tape end extends beyond centerline of applying roller
	The one-way tension roller is defective	Replace the one-way tension roller
Tape not centered on box seam	Tape drum not centered	Reposition tape drum
	Centering guides not centered	Adjust centering guides
	Box flaps not of equal length	Check box specifications

Recommended Spare Parts

Listed are a set of spare parts that will periodically require replacement due to normal wear. These parts should be ordered to keep the taping heads in production:

AccuGlide™ 3 Upper Taping Head - 2 inch

Qty.	Part Number	Description
4	78-8076-4500-3	Stud – Mounting
1	78-8137-3311-6	Spring – Upper Extension
1	78-8017-9173-8	Blade – 65mm/2.56 Inch
2	78-8052-6602-6	Spring – Cutter
1	78-8076-4726-4	Tool – Tape Threading

AccuGlide™ 3 Lower Taping Head - 2 inch

Qty.	Part Number	Description
1	78-8017-9173-8	Blade – 65mm/2.56 Inch
2	78-8052-6602-6	Spring – Cutter
4	78-8076-4500-3	Stud – Mounting
1	78-8137-3312-4	Spring – Lower Extension
1	78-8076-4726-4	Tool – Tape Threading

In addition to the above set of spare parts supplied with the taping head, it is suggested that the following spare parts be maintained which will require replacement under normal wear of the taping head.

Qty.	Part Number	Description
1	78-8057-6179-4	Roller – Applying
1	78-8057-6178-6	Roller – Buffing
1	78-8113-7030-9	Spring – Torsion

Replacement Parts and Service

Refer to the first page of this instruction manual **“Replacement Parts and Service Information".**

Replacement Parts Illustrations and Parts Lists
AccuGlide™ 3 High Speed 2 Inch Upper Taping Head, Type 10800
AccuGlide™ 3 High Speed 2 Inch Lower Taping Head, Type 10800

1. Refer to the **Taping Head Assemblies** Figure to find all the parts illustrations identified by **f gure numbers.**

2. Refer to the figure or figures to determine the **individual parts** required and the **parts reference number.**

3 . The **replacement parts list,** that follows each illustration, includes the **part number** and **part description** for the parts in that illustration.

Note – The complete description has been included for standard fasteners and some commercially available components. This has been done to allow obtaining these standard parts locally, should the customer elect to do so.

4. Refer to the first page of this instruction manual **"Replacement Parts and Service Information"** for replacement parts ordering information.

Important – Not all the parts listed are normally stocked items. Some parts or assemblies shown are available only on a special order basis. Contact 3M/Tape Dispenser Parts to confirm item availability.

Tape Head -
AccuGlide™ 3 - 2 inch

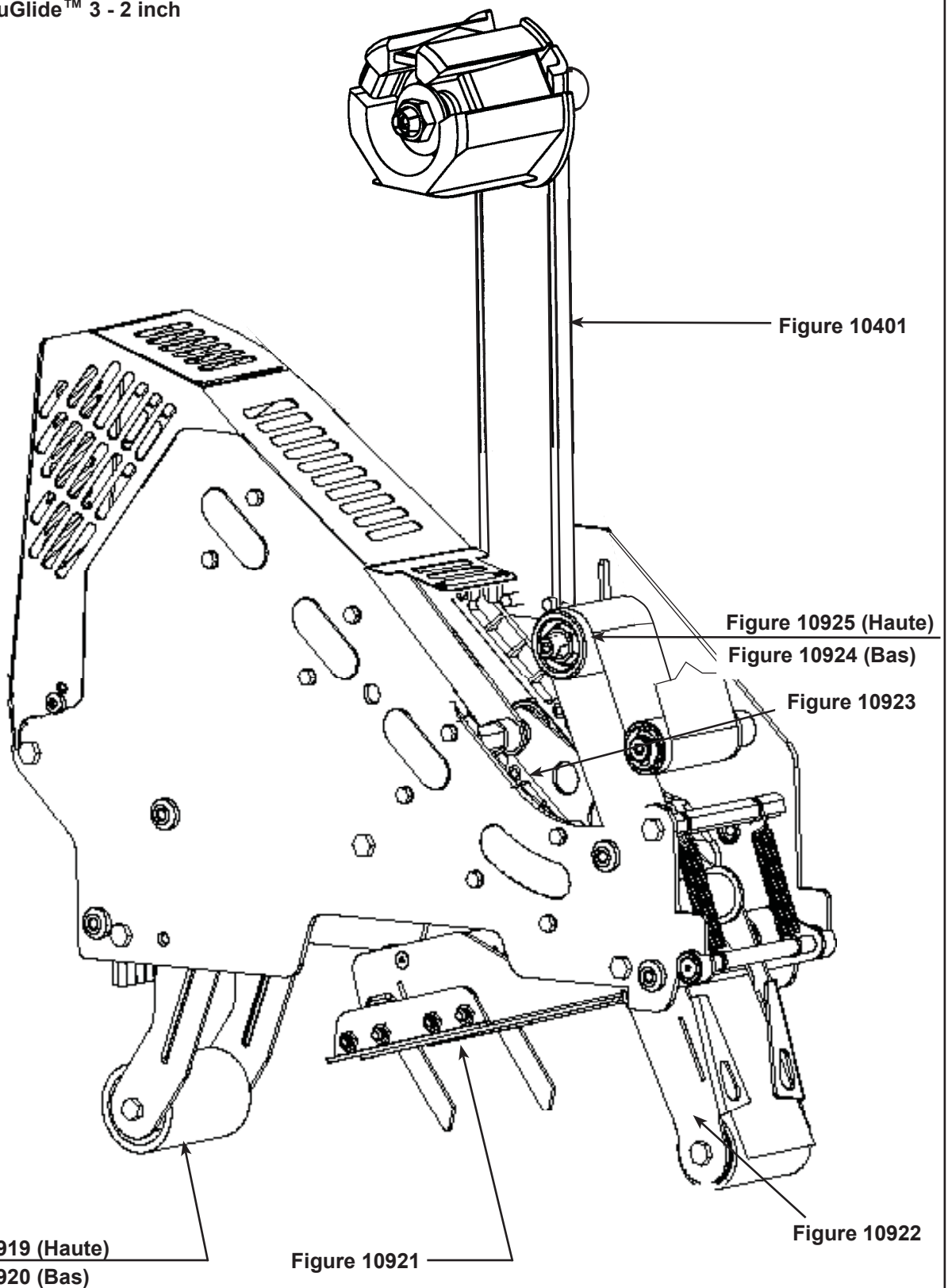

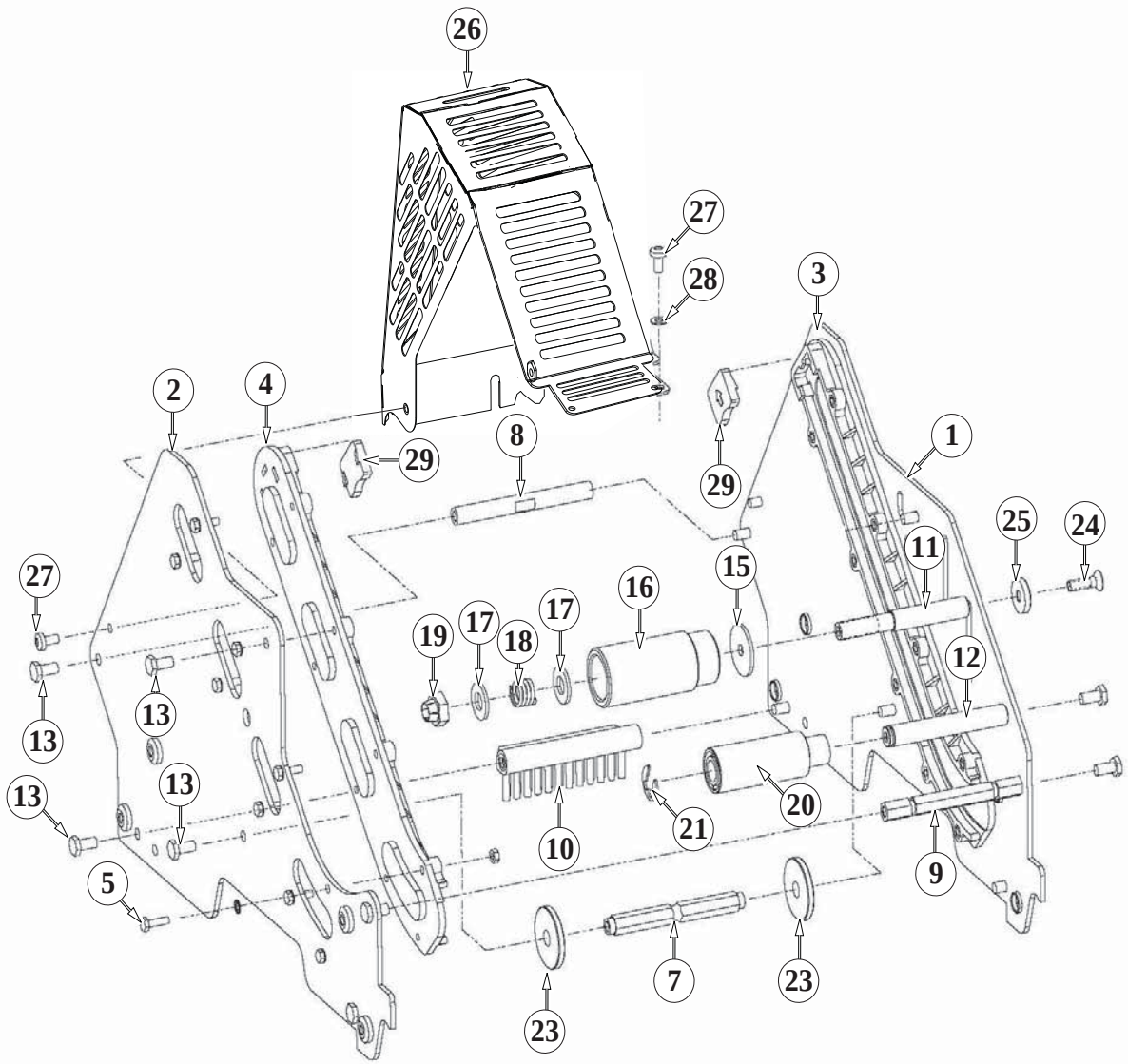

Figure 10925 – Upper Head

Figure 10925 – 2" Upper Head

Ref. No.	3M Part No.	Description
10925-1	78-8137-3294-4	Frame – Tape Mount Upper Assembly
10925-2	78-8137-3295-1	Frame – Front Upper Assembly
10925-3	78-8068-4143-9	Guide – #1
10925-4	78-8068-4144-7	Guide – #2
10925-5	78-8060-7818-0	Screw – Hex Hd, M4 x 12
10925-6	78-8010-7416-8	Nut – Hex Jam, M4
10925-7	78-8070-1251-9	Spacer – Spring
10925-8	78-8137-3298-5	Shaft - Pivot 90mm
10925-9	78-8052-6560-6	Spacer – Front
10925-10	78-8060-7936-0	Brush Assembly
10925-11	78-8052-6564-8	Shaft – Tension Roller
10925-12	78-8052-6568-9	Shaft – Wrap Roller
10925-13	26-1003-5829-5	Screw – Hex Hd, M6 x 12
10925-15	78-8100-1009-6	Washer – Special
10925-16	78-8052-6565-5	Roller – Top Tension
10925-17	26-1004-5510-9	Washer – Plain, M10
10925-18	78-8052-6567-1	Spring – Compression
10925-19	78-8017-9077-1	Nut – Self Locking, M10 x 1
10925-20	78-8052-6569-7	Roller – Wrap
10925-21	26-1000-1613-3	Ring – Retaining, Tru-Arc #1-420-0120-100
10925-22	78-8076-4500-3	Stud – Mounting (not shown)
10925-23	78-8076-5242-1	Stop – Cut-Off Frame
10925-24	78-8060-8179-6	Screw – Flat Hd Hex, M6 x 20
10925-25	78-8076-5477-3	Washer – Special /6.5 x 20 x 4
10925-26	78-8137-3299-3	Guard – Head
10925-27	78-8060-8087-1	Screw – M5 x 10
10925-28	78-8005-5741-1	Washer – Flat, M5
10925-29	78-8133-9615-3	Bumper
10925-30	78-8133-9605-4	Label – Threading, English Language
10925-31	78-8076-4716-5	Star Washer 4mm

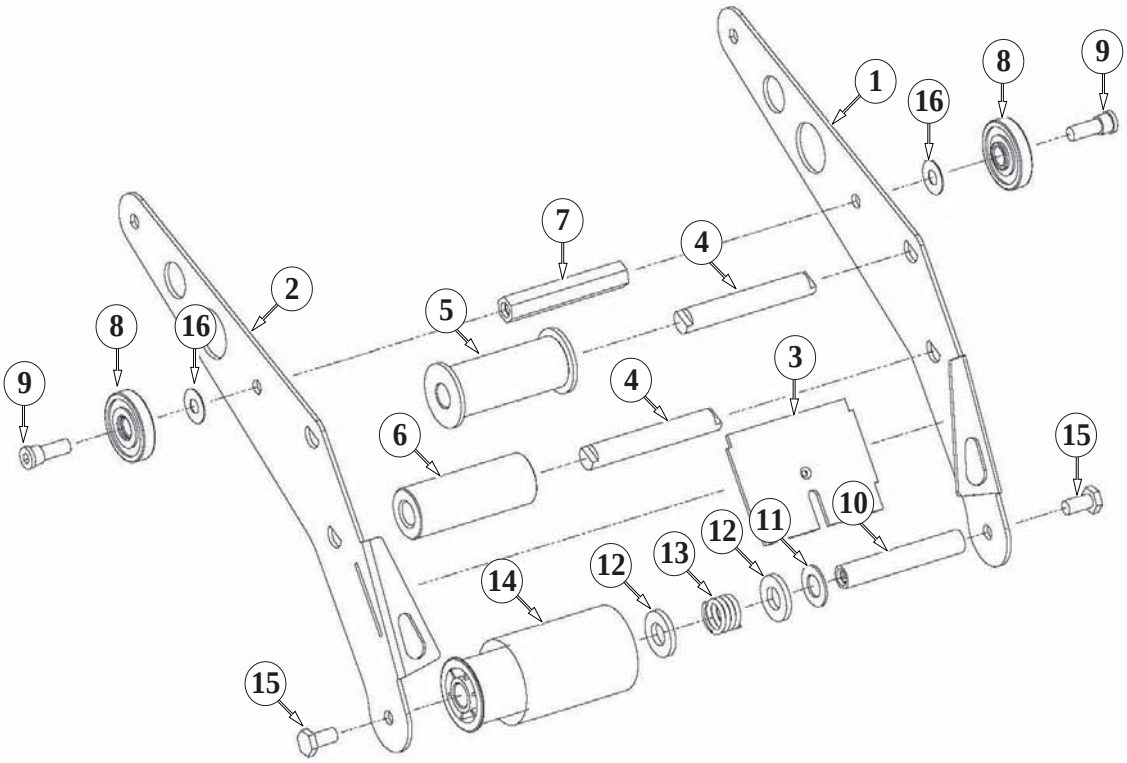

Figure 10922 – Upper and Lower Heads

Figure 10922 – 2" Upper and Lower Heads

Ref. No.	3M Part No.	Description
10922-1	78-8133-9509-8	Applying Arm #1
10922-2	78-8133-9510-6	Applying Arm #2
10922-3	78-8070-1221-2	Plate – Tape
10922-4	78-8070-1309-5	Shaft Roller
10922-5	78-8070-1367-3	Roller – Knurled Assembly
10922-6	78-8070-1266-7	Roller – Wrap
10922-7	78-8052-6580-4	Spacer
10922-8	78-8017-9082-1	Bearing – Special, 30 mm
10922-9	78-8017-9106-8	Screw – Bearing Shoulder
10922-10	78-8052-6575-4	Shaft – Roller
10922-11	78-8017-9074-8	Washer – Nylon, 15 mm
10922-12	26-1004-5510-9	Washer – Friction
10922-13	78-8052-6567-1	Spring – Compression
10922-14	78-8137-1438-9	Assembly– Applying Roller
10922-15	26-1003-5829-5	Screw – Hex Hd, M6 x 12
10922-16	78-8094-6151-6	Washer - Flat, 6.5 ID x 15 OD x 0.5 Thk

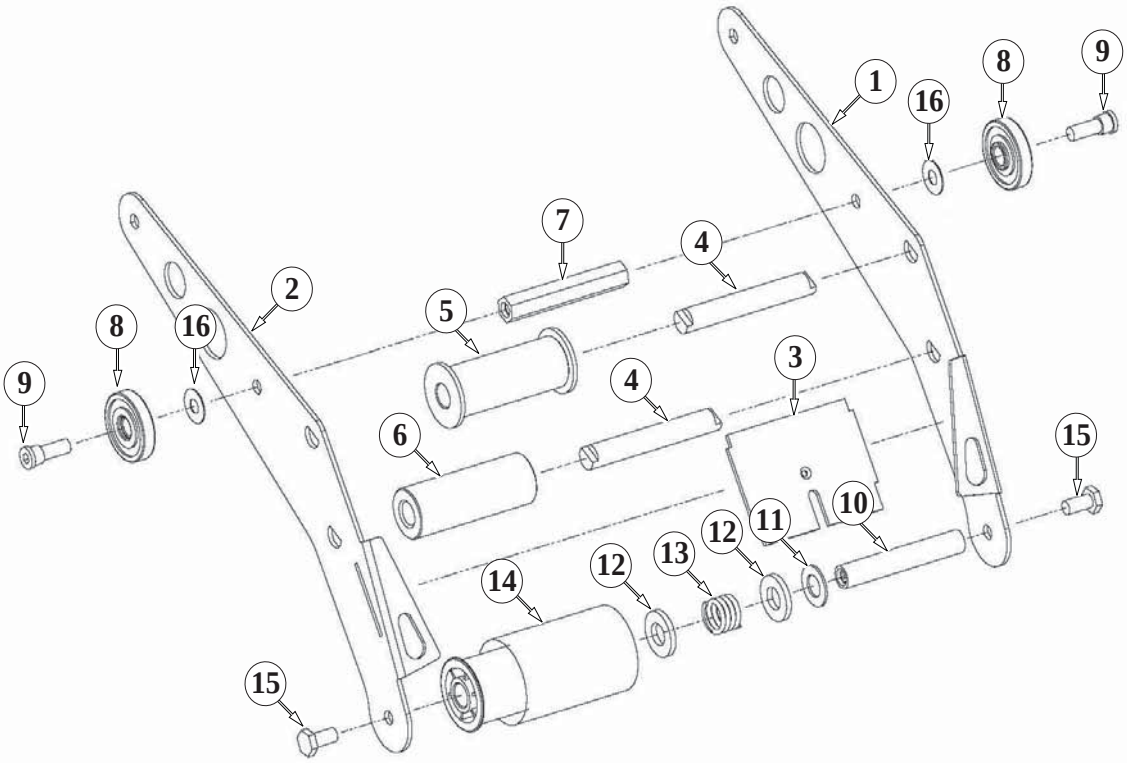

Figure 10919 – Upper Head

Figure 10919 – 2" Upper Head

Ref. No.	3M Part No.	Description
10919-1	78-8137-3300-9	Buffing Arm – Sub Assembly
10919-2	78-8137-3301-7	Buffing Arm – Sub Assembly
10919-3	78-8052-6575-4	Shaft – Roller
10919-4	78-8137-1398-5	Roller - Buffing Assembly
10919-5	78-8070-1220-4	Spacer – Spring
10919-6	78-8052-6580-4	Spacer
10919-7	26-1003-5829-5	Screw – Hex Hd, M6 x 12
10919-8	78-8137-3311-6	Spring – Upper (100 fpm)
10919-9	78-8070-1244-4	Holder – Spring

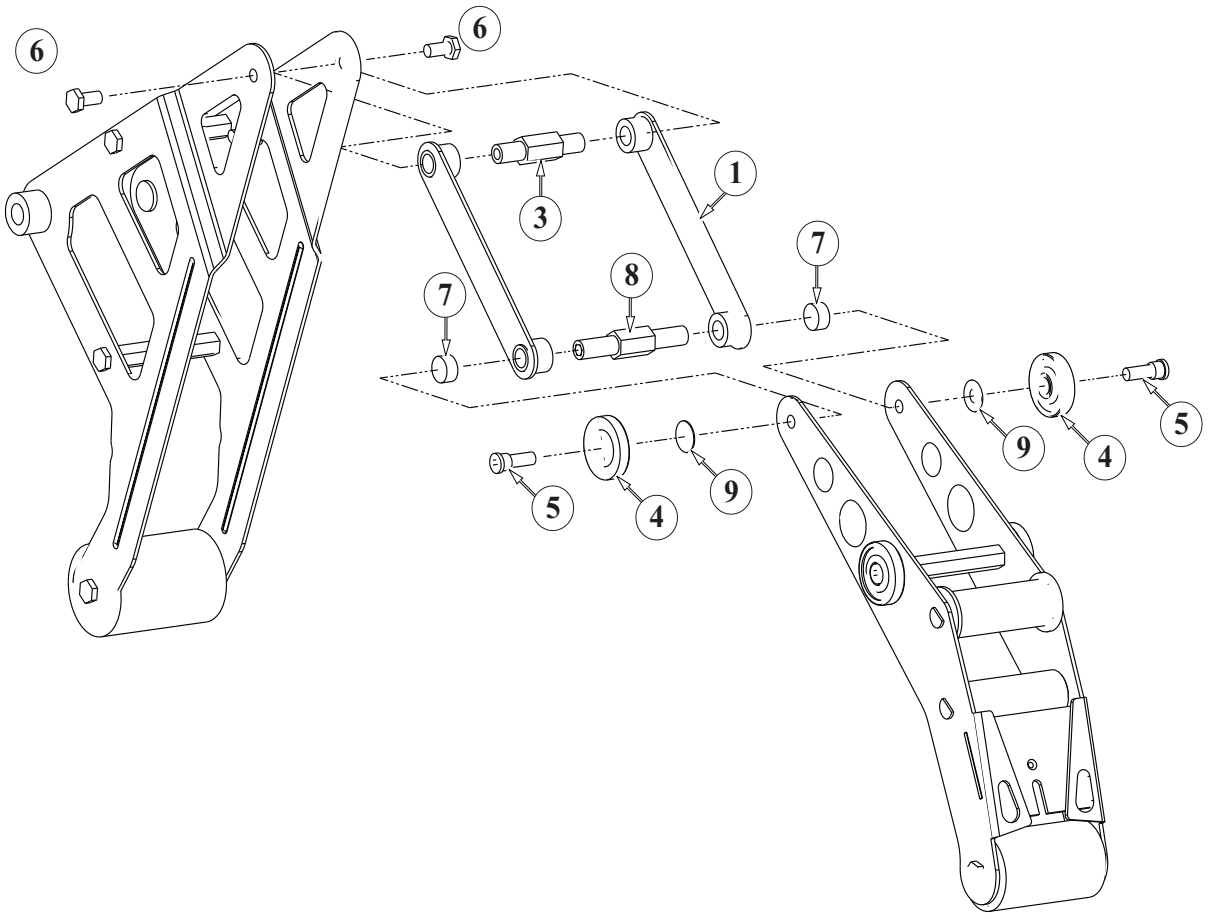

Figure 10923 – Upper and Lower Heads

Figure 10923 – 2" Upper and Lower Heads

Ref. No.	3M Part No.	Description
10923-1	78-8137-3302-5	Link – Assembly
10923-3	78-8137-3304-1	Shaft – Pivot, Buffing
10923-4	78-8017-9082-1	Bearing – Special 30 mm
10923-5	78-8017-9106-8	Screw – Bearing Shoulder
10923-6	26-1003-5829-5	Screw – Hex Hd, M6 x 12
10923-7	78-8137-3305-8	Spacer – Applying Pivot
10923-8	78-8137-3306-6	Shaft – Pivot, Applying
10923-9	78-8094-6151-6	Washer - Flat, 6.5 ID x 15 OD x 0.5 Thk

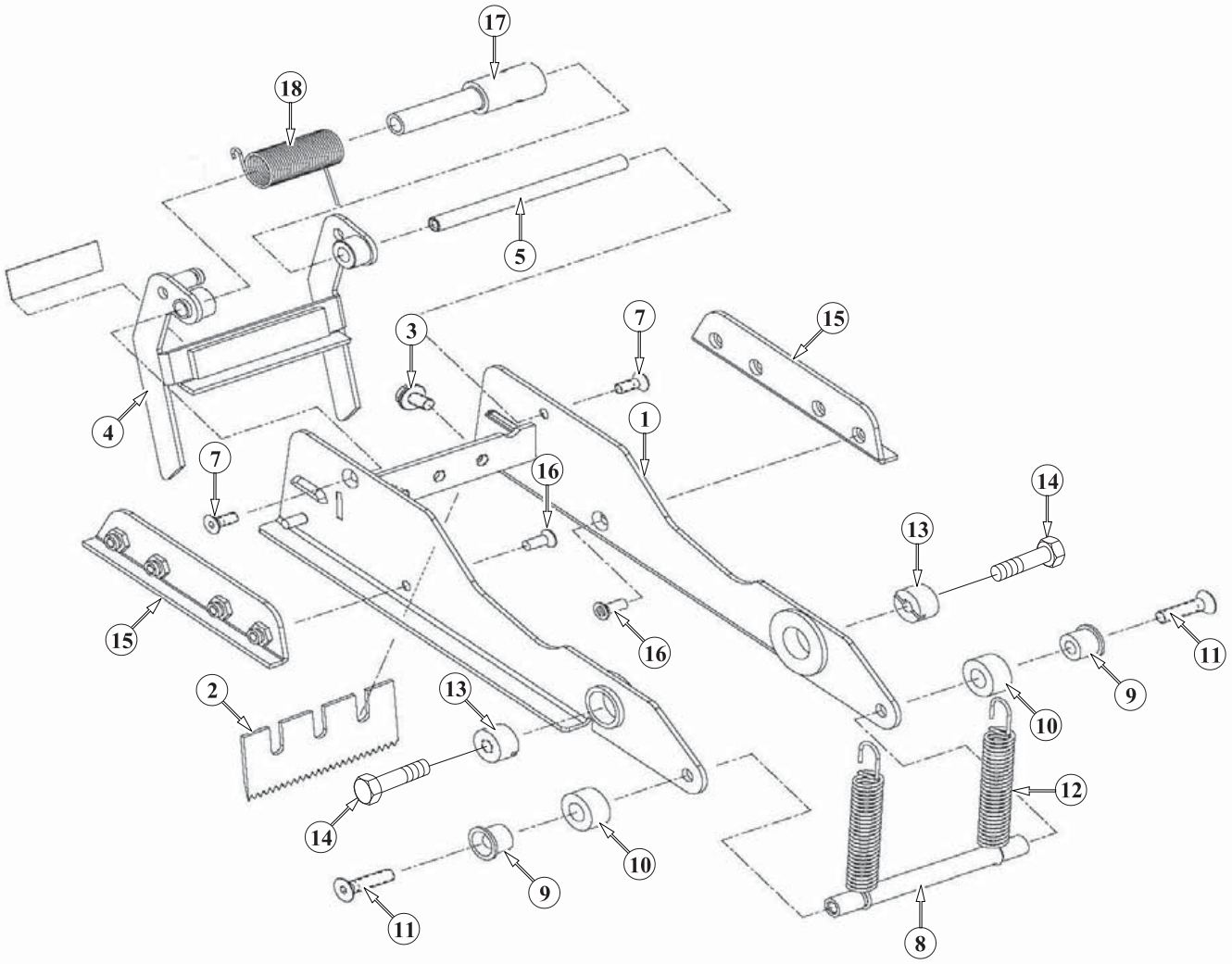

Figure 10921 – Upper and Lower Heads

Figure 10921 – 2" Upper and Lower Heads

Ref. No.	3M Part No.	Description
10921-1	78-8137-3307-4	Frame – Cut-Off Weldment
10921-2	78-8017-9173-8	Blade – 65 mm/2.56 Inch
10921-3	26-1003-8596-7	Screw - Hex Hd M5 x 8 w/ Ext. Tooth Lockwasher
10921-4	78-8070-1371-5	Blade Guard Assembly – W/English Language Label
10921-5	78-8052-6597-8	Shaft – Blade Guard
10921-7	26-1005-4758-2	Screw – Flat Hd, Soc Dr, M4 x 10
10921-8	78-8017-9135-7	Shaft – Spacer
10921-9	78-8052-6600-0	Spacer
10921-10	78-8070-1269-1	Bumper
10921-11	26-1005-4757-4	Screw – Flat Hd, Soc Dr, M5 x 20
10921-12	78-8052-6602-6	Spring – Cutter
10921-13	78-8017-9132-4	Pivot – Cutter Lever
10921-14	26-1003-5828-7	Screw – Spec, Hex Hd, M6 x 10
10921-15	78-8137-3308-2	Slide – Extension
10921-16	26-1008-6574-5	Screw – Flat Hd, Phil Dr, M4 x 10
10921-17	78-8113-7031-7	Bushing – 58.5mm Long
10921-18	78-8113-7030-9	Spring – Torsion
10921-19	78-8070-1335-0	Label – Warning, English

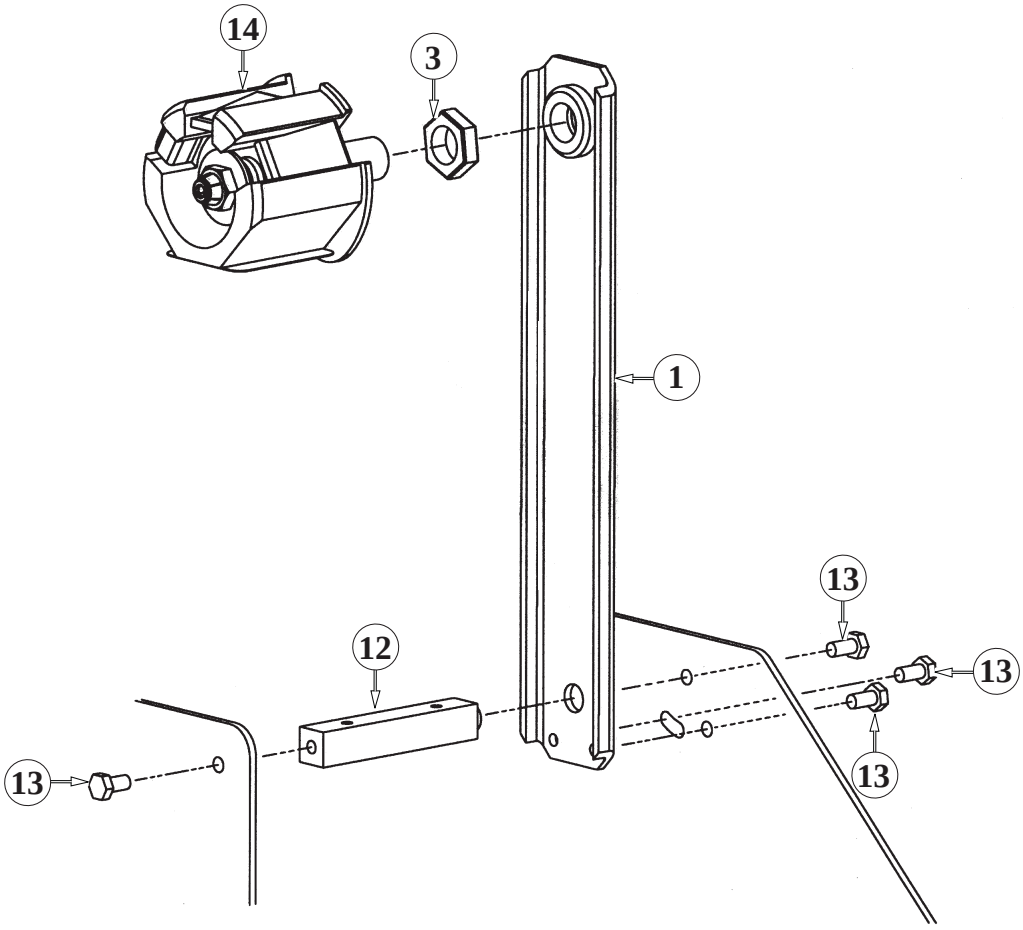

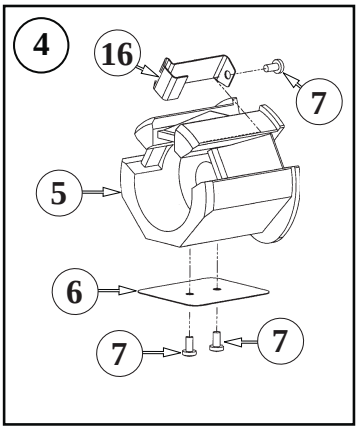

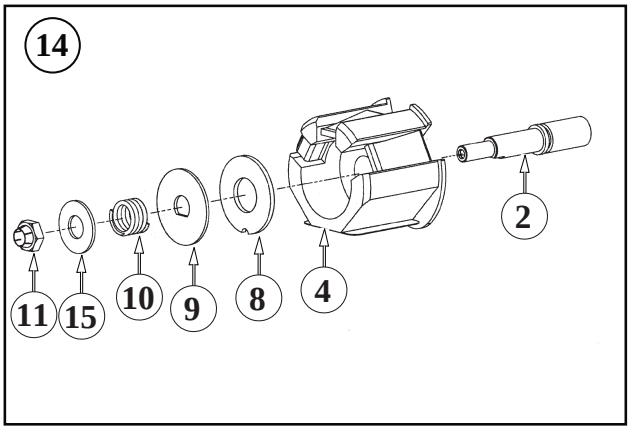

Figure 10401 – Upper and Lower Heads

Figure 10401 – 2" Latch Upper and Lower Heads

Ref. No.	3M Part No.	Description
10401-1	78-8070-1395-4	Bracket – Bushing Assembly
10401-2	78-8076-4519-3	Shaft – Tape Drum, 50mm
10401-3	78-8017-9169-6	Nut – M18 x 1
10401-4	78-8098-8827-0	Tape Drum Sub Assembly – 2 Inch Wide
10401-5	78-8098-8749-6	Tape Drum
10401-6	78-8098-8817-1	Leaf Spring
10401-7	26-1002-5753-9	Screw – Self Tapping
10401-8	78-8060-8172-1	Washer – Friction
10401-9	78-8052-6271-0	Washer – Tape Drum
10401-10	78-8100-1048-4	Spring – Core Holder
10401-11	78-8017-9077-1	Nut – Self Locking, M10 x 1
10401-12	78-8100-1046-8	Spacer – Bracket
10401-13	26-1003-5829-5	Screw – Hex Hd, M6 x 12
10401-14	78-8098-8814-8	Tape Drum Assembly – 2 Inch Head
10401-15	26-1004-5510-9	Washer – Plain, M10
10401-16	78-8098-8816-3	Latch – Tape Drum

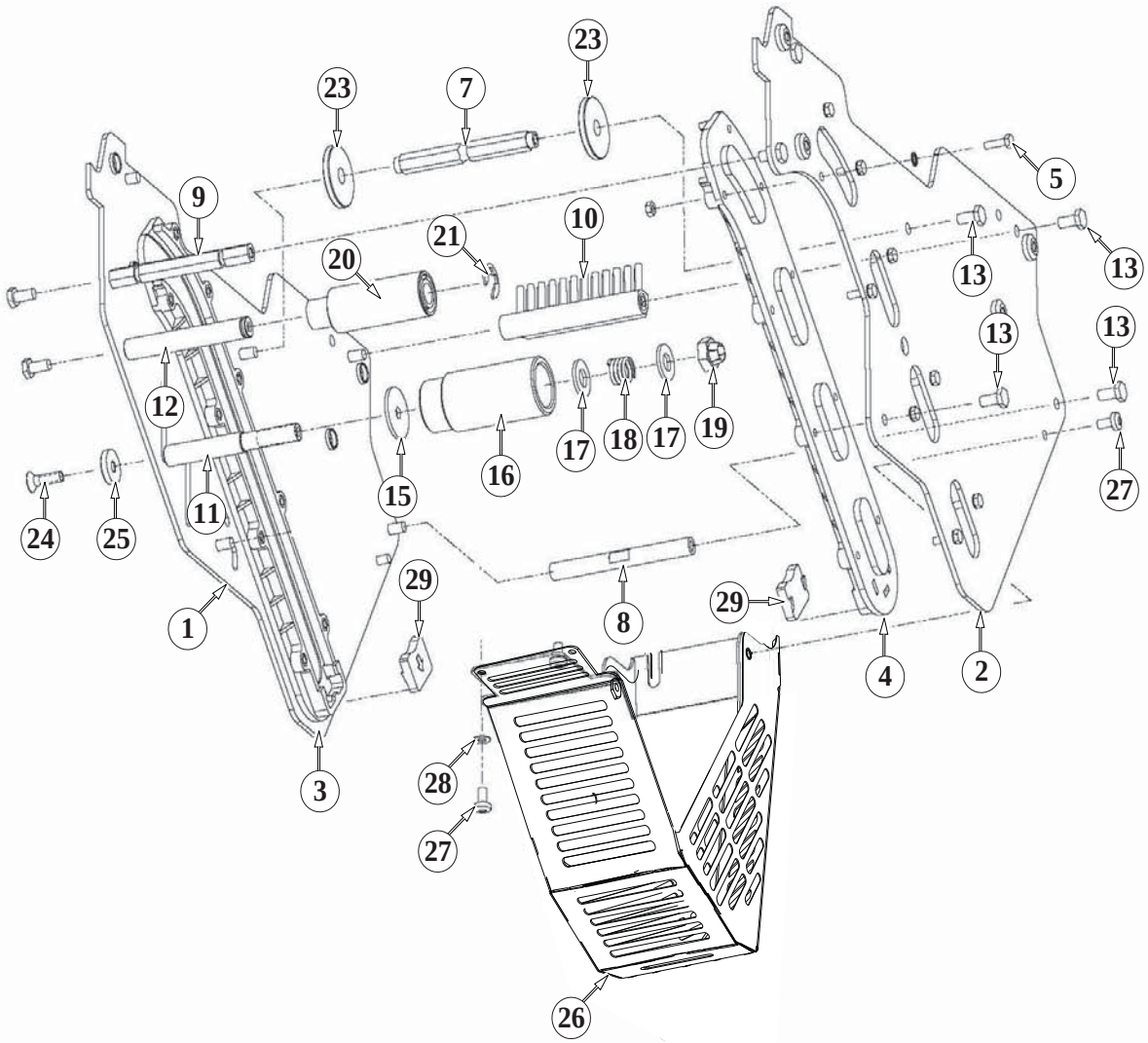

Figure 10924 – Lower Head

Figure 10924 – 2" Lower Head

Ref. No.	3M Part No.	Description
10924-1	78-8137-3296-9	Frame – Tape Mount Lower Assembly
10924-2	78-8137-3297-7	Frame – Front Lower Assembly
10924-3	78-8068-4144-7	Guide – #2
10924-4	78-8068-4143-9	Guide – #1
10924-5	78-8060-7818-0	Screw – Hex Hd, M4 x 12
10924-6	78-8010-7416-8	Nut – Hex, M4
10924-7	78-8070-1251-9	Spacer – Spring
10924-8	78-8054-3298-5	Spacer – 10 x 10 x 90 mm
10924-9	78-8052-6560-6	Spacer – Front
10924-10	78-8060-7936-0	Brush Assembly
10924-11	78-8052-6564-8	Shaft – Tension Roller
10924-12	78-8052-6568-9	Shaft – Wrap Roller
10924-13	26-1003-5829-5	Screw – Hex Hd, M6 x 12
10924-15	78-8100-1009-6	Washer – Special
10924-16	78-8052-6606-7	Roller – Tension Bottom
10924-17	26-1004-5510-9	Washer – Plain, M10
10924-18	78-8052-6567-1	Spring – Compression
10924-19	78-8017-9077-1	Nut – Self Locking, M10 x 1
10924-20	78-8052-6569-7	Roller – Wrap
10924-21	26-1000-1613-3	Ring – Retaining, Tru-Arc #1-420-0120-100
10924-22	78-8076-4500-3	Stud – Mounting (not shown)
10924-23	78-8076-5242-1	Stop – Cut-Off Frame
10924-24	78-8060-8179-6	Screw – Flat Hd Hex, M6 x 20
10924-25	78-8076-5477-3	Washer – Special /6.5 x 20 x 4
10924-26	78-8137-3299-3	Guard – Head
10924-27	78-8060-8087-1	Screw – M5 x 10
10924-28	78-8005-5741-1	Washer – Flat, M5
10924-29	78-8076-4734-8	Bumper
10924-30	78-8133-9606-2	Label – Threading, English Language
10924-31	78-8076-4716-5	Star Washer 4mm

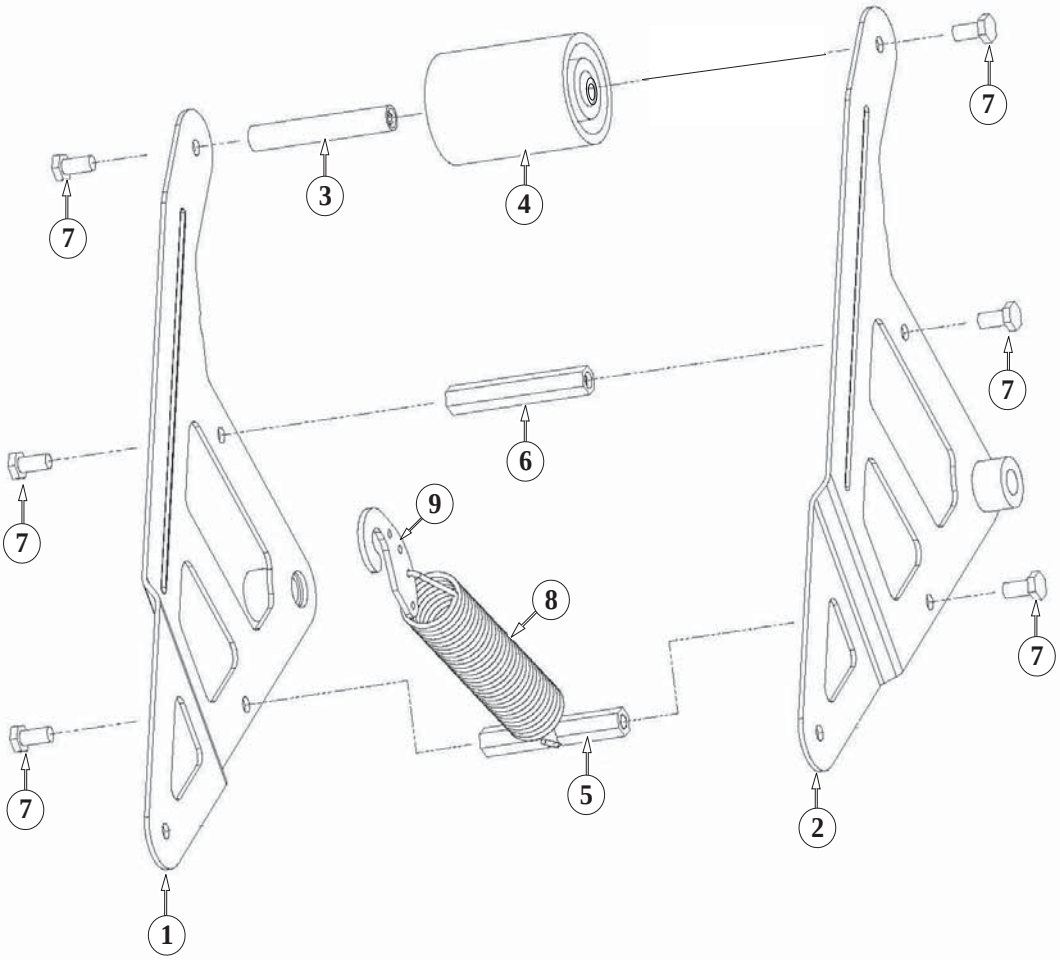

Figure 10920 – Lower Head

Figure 10920– Lower Head

Ref. No.	3M Part No.	Description
10920-1	78-8137-3300-9	Buffing Arm – Sub Assembly
10920-2	78-8137-3301-7	Buffing Arm – Sub Assembly
10920-3	78-8052-6575-4	Shaft – Roller
10920-4	78-8137-1398-5	Roller - Buffing Assembly
10920-5	78-8070-1220-4	Spacer – Spring
10920-6	78-8052-6580-4	Spacer
10920-7	26-1003-5829-5	Screw – Hex Hd, M6 x 12
10920-8	78-8137-3312-4	Spring – Lower (100 fpm)
10920-9	78-8070-1244-4	Holder – Spring

THIS PAGE IS BLANK