Instructions and Parts List

3M-Matic™

12AF Model 38700

Adjustable Case Sealer with AccuGlide™ Taping Heads Model 18500

Important

It is recommended you immediately order the spare parts listed on page 24. These parts are expected to wear through normal use, and should be kept on hand to minimize production delays.

34-7004-7420-7(B50.025)R1

Litho in U.S.A.

3M Packaging Systems Division

3M Center Bldg. 220-8W-01
St. Paul, MN 55144-1000

3M

To Our Customers:

This is the "3M-Matic"/"AccuGlide"/"Scotch"/"Opta-Pak" brand Equipment you ordered. It has been set up and tested in the factory with "Scotch" Brand tapes. If any problems occur when operating this equipment, and you desire a service call, or phone consultation, call the 3M National Service Center on 1-800/328 1390 (Twin Cities Metro Area call 731 6507). Please provide the customer support coordinator with the machine catalog number and serial number. If you have a technical question that does not require an immediate response, you may Fax it to 612/731 6650.

Replacement Parts

Order parts by **part number, part name,** quantity required, **machine name, number** and **model number.**

Replacement parts and parts prices available from:

Dispenser Parts
Route 4, Box 5B
Amery, WI 54001

715/268 8126 (WI)
800/344 9883 (Outside WI)
FAX# 715/268 8153

34-7004-7364-7(G201)R2 XY

Litho in U.S.A.

3M Packaging Systems Division

3M Center Bldg. 220-8W-01
St. Paul, MN 55144-1000

Instruction Manual
12AF Adjustable Case Sealer
Model 38700

Table of Content

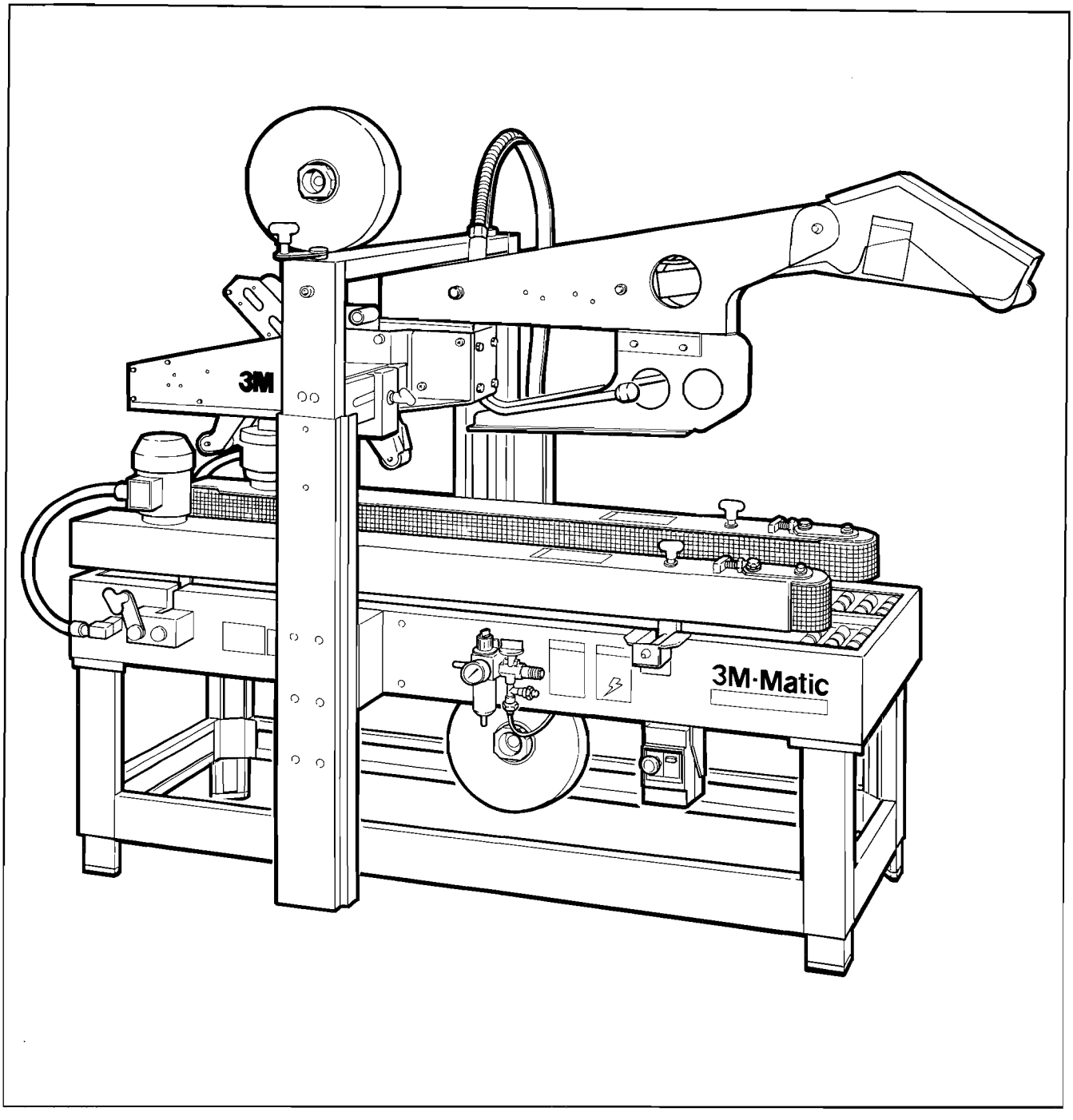

"3M-Matic" 12AF Adjustable Case Sealer - Model 38700

Description

The **"3M-Matic"** 12AF Adjustable Case Sealer with **"AccuGlide"** Taping Heads is designed to accept filled regular slotted containers from an existing conveyor, fold the top flaps and apply a "C" clip of **"Scotch" brand** Pressure-sensitive Film Box Sealing Tape to the top and bottom center seams of the box. A minimum spacing, equal to 16 inches or 405 mm plus the length of the box at a maximum conveyor speed of 60 F.P.M. [0,30 m/s], must be maintained for boxes entering the case sealer.

Receiving And Handling

After the machine has been uncrated, examine the Case Sealer for damage that might have occurred during transit. **If damage is evident, file a damage claim immediately** with the transportation company and also your 3M Representative.

Spare parts, tools, and oil can are provided in a small plastic case. Remove and keep with Case Sealer for use in set-up, operation, and maintenance.

Several **machine components** are **tied down** to prevent damage during transit. **Remove** these **before proceeding** with the following set-up instructions.

Warranty

Important Notice To Purchaser: The following is made in lieu of all warranties, expressed or implied, including the implied warranties of merchantability and fitness for purpose: Seller and manufacturer warrant that the **"3M-Matic"** equipment is free from defects in material and workmanship on the date the machine is shipped by the seller and for the time periods stated below. Seller's and manufacturer's only obligation hereunder shall be to repair or replace, at its option, any mechanical part proved to be defective, provided the defect occurs within ninety (90) days* (see **NOTE** below) after the date of delivery and the said part is returned immediately to the 3M factory or to an authorized service station designated by the manufacturer. **Neither seller nor manufacturer shall be liable either in tort or in contract for any loss or damage, direct, incidental, or consequential, arising out of the use of or the inability to use the "3M-Matic" equipment.** No statement or recommendation not contained herein shall have any force or effect unless in an agreement signed by officers of seller and manufacturer.

NOTE: * This time period shall be (1) year for the transmission and motor, three (3) years for the **"AccuGlide"** taping head, except for the blades, springs and apply/buffing rollers which shall remain subject to the ninety (90) day warranty period.

Specifications

1. **Power Requirements:**

   115V, 60 Hz., 3.6 Amp.
   70 PSIG [485 kPa gauge pressure], 2.5 SCFM [4,25 m^3/h 21°C, 101 kPa] maximum at maximum cycle rate.
   A pressure regulator-filter is included.

2. **Machine Dimensions:** **Overall Dimensions**

A. Length	-	60 inches [1,525 m]
B. Width	-	36 inches [0,915 m]
C. Height	-	64 inches [1,625 m]

(Specifications continued on next page.)

Specifications (Continued)

D.	Bed Length	-	60 inches	[1,525 m]
	Bed Width	-	22 1/2 inches	[0,570 m]
	Bed height	-	21 1/2 inches	[0,545 m]
E.	Weight	-	770 pounds [350 kg] crated	
		-	680 pounds [310 kg] uncrated	

3. **Operating Rate:**

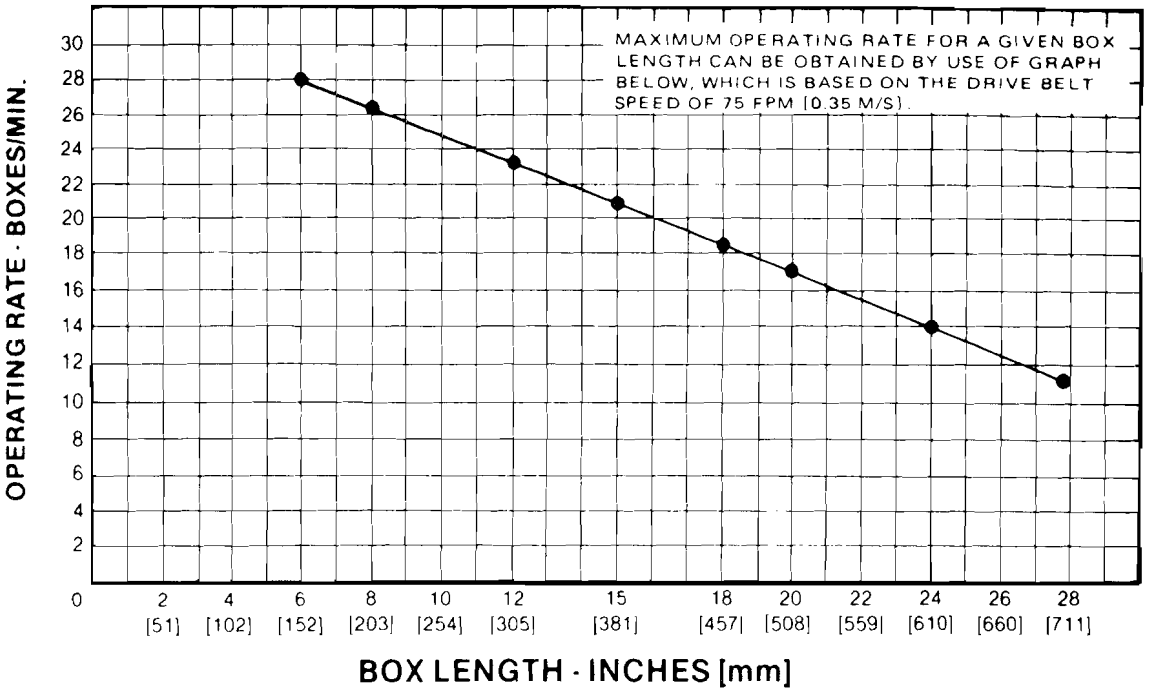

4. **Operating Conditions:**

Use in dry, relatively clean environments at 40° to 105°F [5° to 40°C] with clean dry boxes.

IMPORTANT SAFEGUARD

Machine **should not** be washed down or **subjected to conditions causing moisture condensation** on components.

5. **Tape:**

"Scotch" brand pressure-sensitive film box sealing tapes.

6. **Tape Width:**

1-1/2 inches or 36 mm minimum to 2 inches [50 mm] maximum.

7. **Tape Roll Diameter:**

Up to 15 inches [380 mm] maximum on a 3 inch [76,2 mm] diameter core. (Accommodates all system roll lengths of **"Scotch"** brand film tapes.)

(Specifications continued on next page.)

8. **Tape Application Leg Length:**

   2 3/4 inches ± 1/4 inch [70 mm ± 6 mm]

9. **Box Board:**

   125 to 275 P.S.I. bursting test, single wall A, B, or C flute.

10. **Box Weight and Size Capacities:**

    A. Box weight, filled - minimum weight must be sufficient to hold carton on the conveyor bed with bottom flaps fully closed, maximum 65 lbs. [30 kg].

    B.

Box Size:	**Minimum**	**Maximum**
Length -	6.0 inches or 150 mm	24 inches or 610 mm
Width -	4 3/8 inches or 110 mm	20 inches or 500 mm
Height -	4 3/4 inches or 120 mm	20 inches or 500 mm

Special modifications may be available for carton sizes not listed above. **Contact your 3M Representative for information.**

Note: The Case Sealer can accommodate most boxes within the size range listed above. However, if the box length (in direction of seal) to box height ratio is **.6** or less, then several boxes should be test run to assure proper machine performance.

DETERMINE THE BOX LIMITATIONS BY COMPLETING THIS FORMULA:

$$\frac{\text{BOX LENGTH IN DIRECTION OF SEAL}}{\text{BOX HEIGHT}} \quad \text{MUST BE GREATER THAN .6}$$

Any box ratio approaching this limitation should be test run to assure performance.

Note: A minimum spacing, equal to 16 inches or 405 mm plus the length of the box at a maximum conveyor speed of 60 F.P.M. [0,30 m/s], must be maintained for boxes entering the Case Sealer.

Set-Up Procedures

It is recommended that the 12AF Case Sealer be set-up and operated with product before placing it in the production line. This approach will allow your thorough review and familiarization with the 12AF before subjecting it and operating personnel to a production situation where time for set-up, adjustments, and operator training usually becomes limited.

The following instructions are presented in **the order recommended** for setting up and installing the Case Sealer, as well as **for learning the operating functions and adjustments.** Following them step by step will result in your thorough understanding of the machine and an installation in your production line that best utilizes the many features built into the Case Sealer.

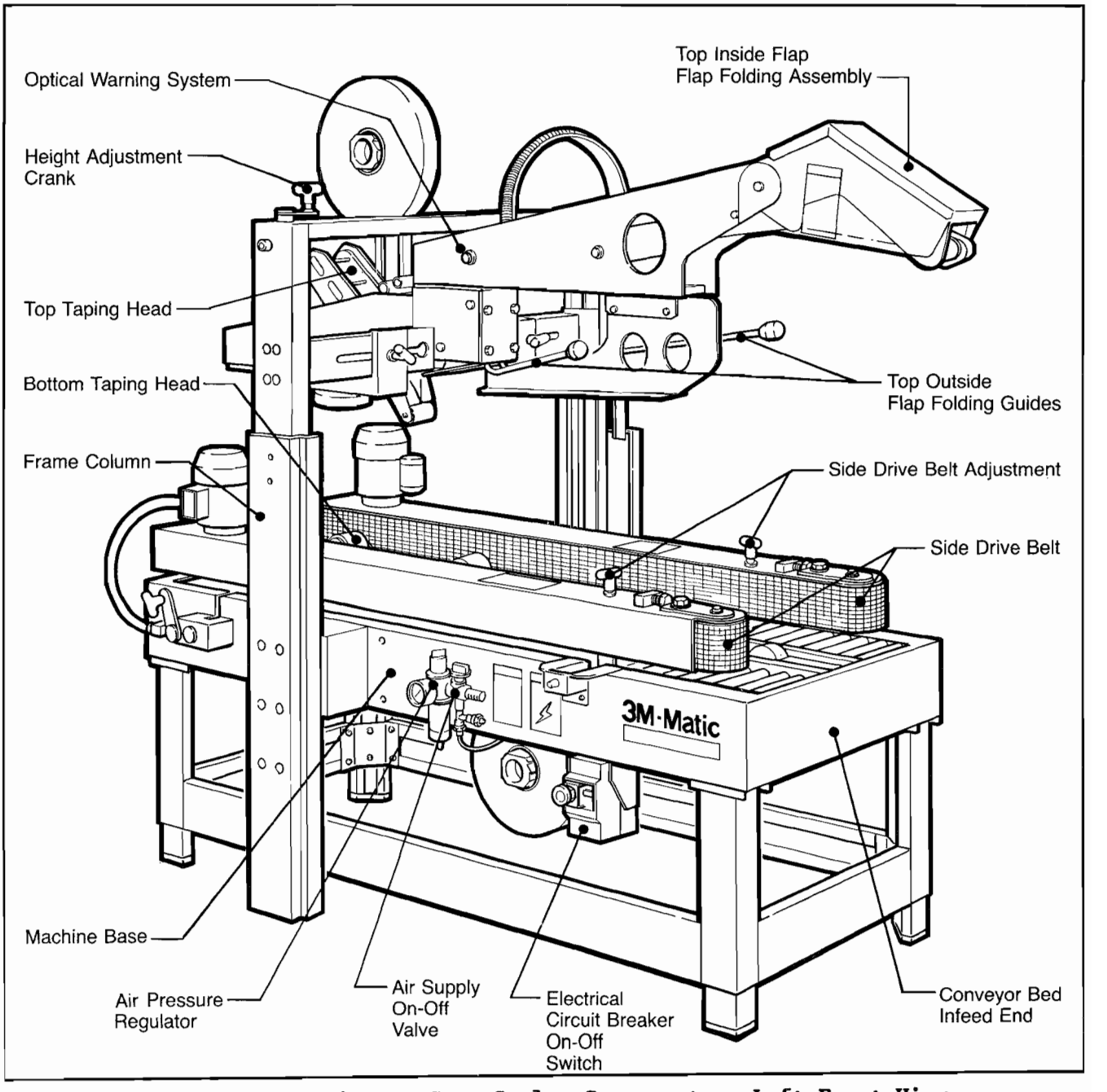

Figure 1 - Set-Up Instructions - Case Sealer Components - Left Front View

Set-Up Procedure (Continued)

Height Adjustment Crank

The height adjustment crank handle is located at the top of the frame columns as shown in Figure 1. The crank handle can be installed at the top of either frame column for customer operating convenience.

Conveyor Bed Height:

The 12AF Case Sealer is equipped with four **adjustable legs** that are located at the corners of the frame. The legs can be adjusted to obtain different machine conveyor bed heights from **21 1/2 inches [545 mm] minimum** to **30 inches [760 mm] maximum.**

The recommended minimum machine conveyor bed height (measured from floor) is 24 inches [610 mm].

Refer to Figure 2 and set the conveyor bed height as follows:

1. Block up the machine frame to allow adequate leg adjustment.

2. **Loosen, but do not remove,** two M8 x 16 mm socket head screws in one leg. Adjust the leg length for the desired conveyor bed height. **Retighten** the two screws to secure the leg. Adjust all four legs as noted.

The **tape drum bracket assembly,** located on the bottom taping head, has **two mounting positions** to allow maximum tape roll capacity through the machine conveyor bed height range.

For conveyor bed heights 24 inches and above, use mounting position shown in Figure 3A.

For conveyor bed heights below 24 inches, use mounting position shown in Figure 3B.

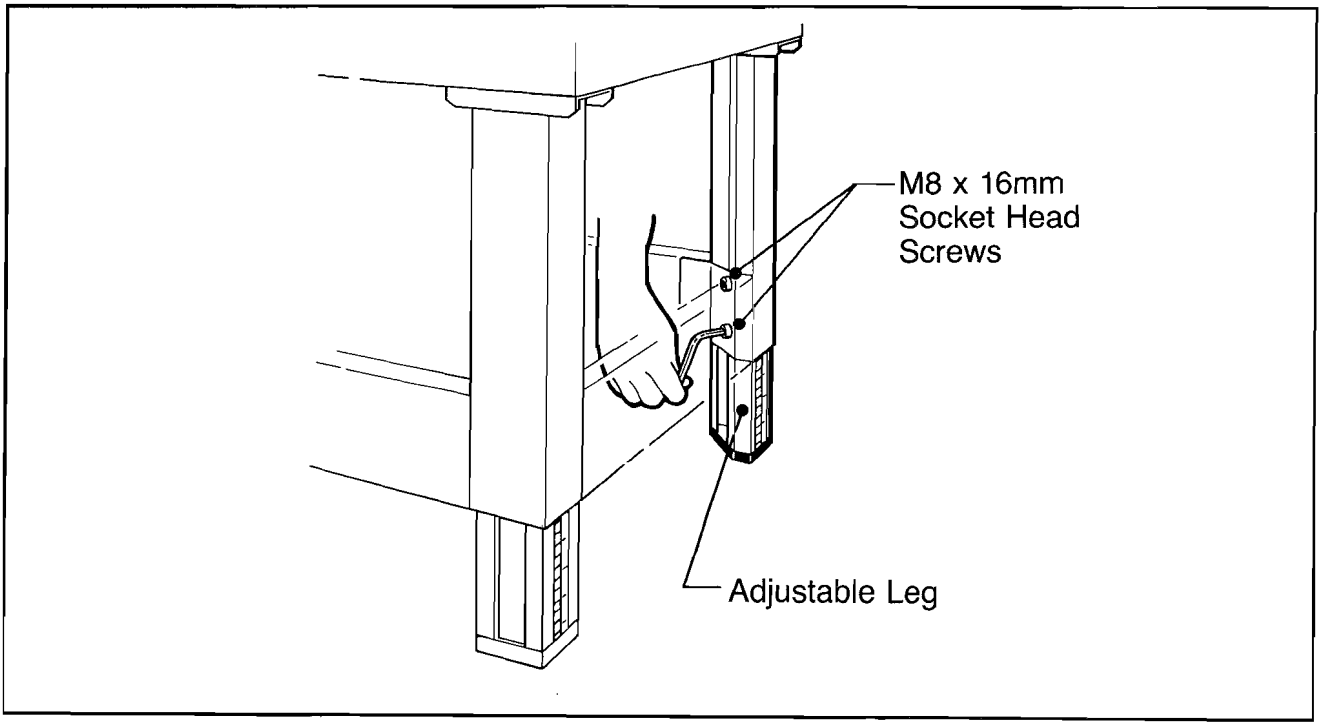

Figure 2 - Conveyor Bed Height Adjustment

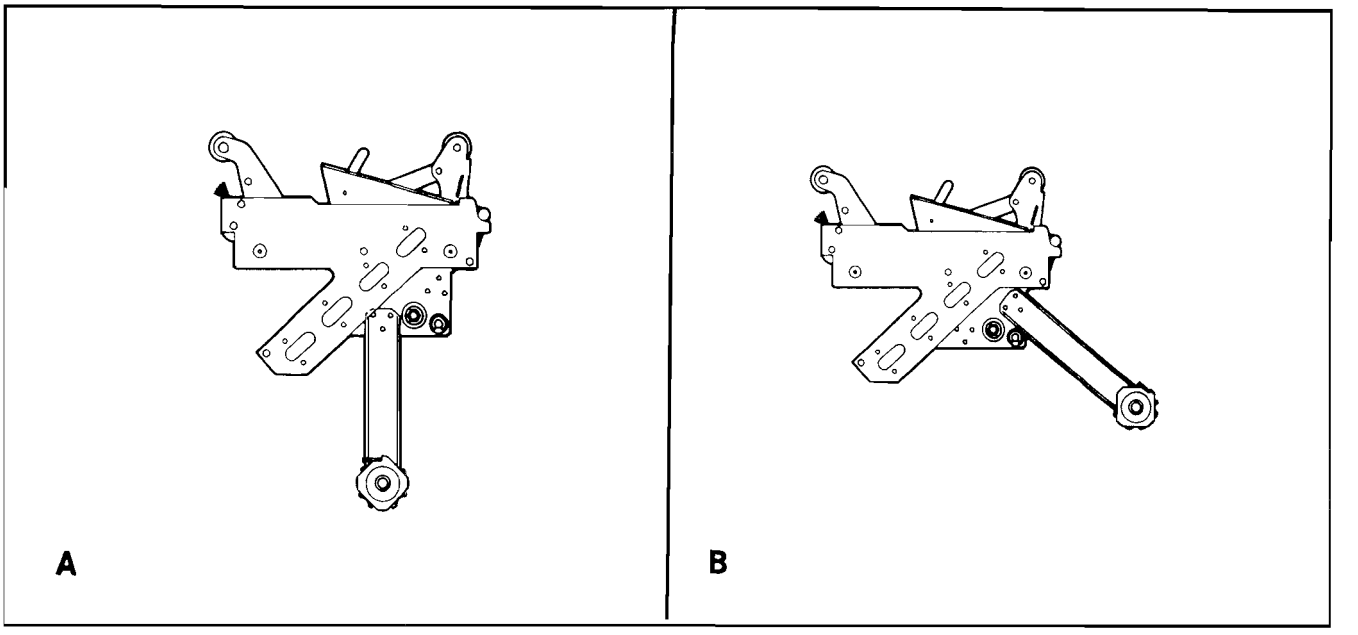

Figure 3 - Tape Drum Bracket Mounting Positions

Production Line
Installation Guide

Refer to figure 4 for suggested conveyor types that can be used in the installations set-up.

Note - A minimum spacing, equal to 16 inches or 405 mm plus the length of the box at a maximum conveyor speed of 60 F.P.M. [0.30 m/s], must be maintained for boxes entering the case sealer.

Contact your 3M Representative for assistance in selecting conveyor requirements and speed that will comply with your box capability.

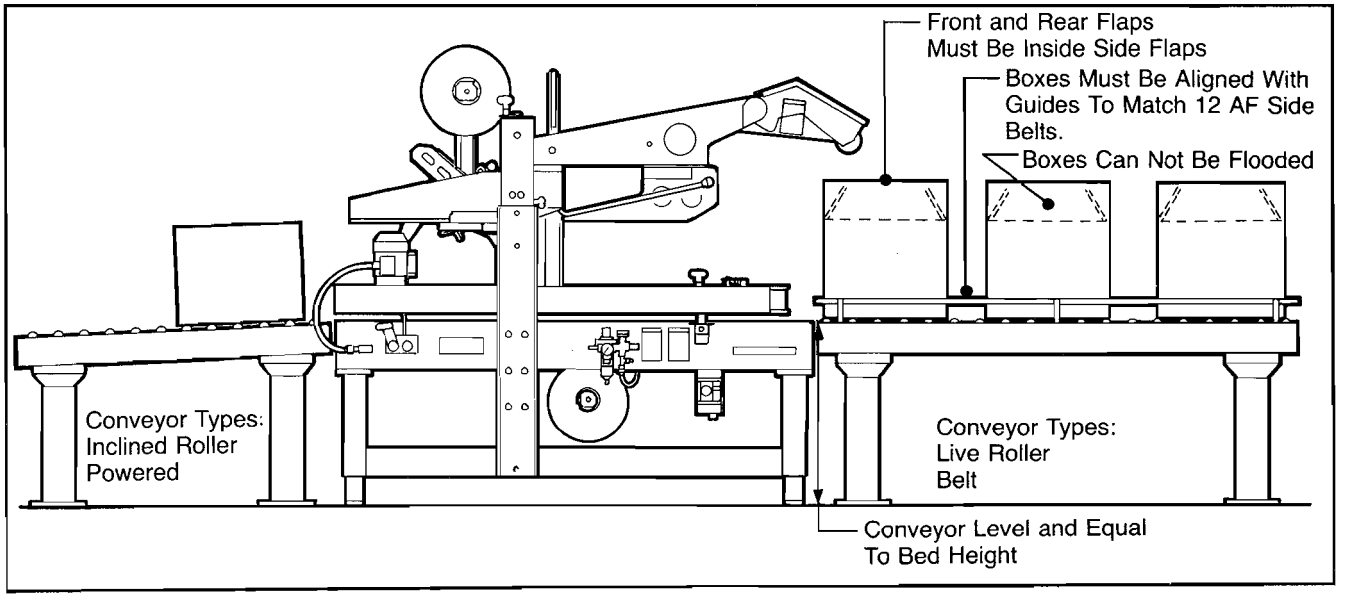

Figure 4 - Conveyor Systems

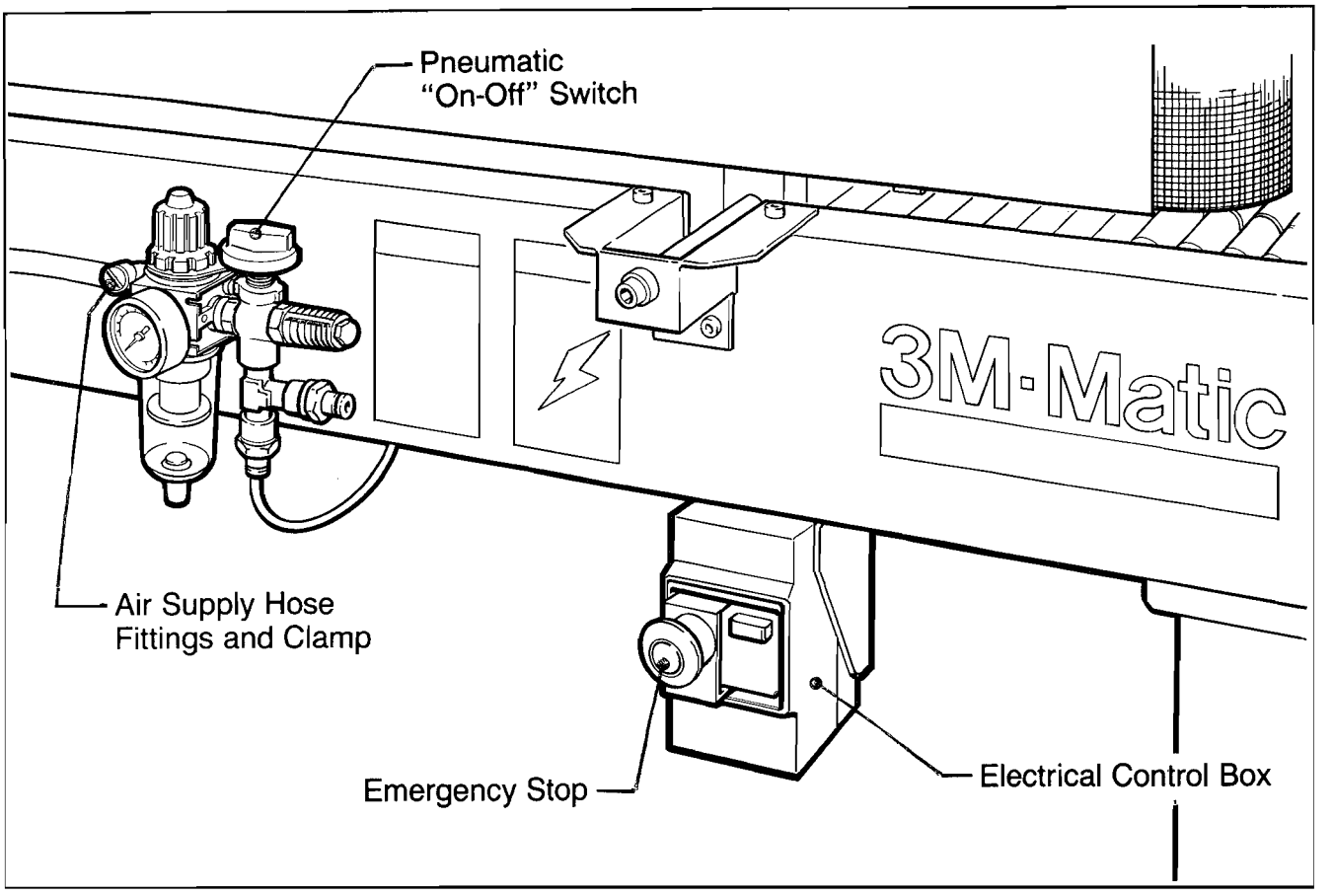

Figure 5 - Electrical - Pneumatic Connections

The electrical control box, shown in Figure 5, contains the **"On-Off" switch** with **pre-set** circuit breaker and can be located on either side of the main conveyor for customer operating convenience. A standard **three conductor power cord with plug** is provided at the back of the electrical control box for **115 volt, 60 hz, 4 amp** electrical service. The **receptacle** providing this service shall be **properly grounded.** The electrical power supply is turned **"On"** by pressing the **black** button, **"Off"** by pressing the **red** button. Before the power cord is plugged into a **115 Volt, 60 Hz** outlet, make sure the **red** button is depressed and that all **packaging materials** and **tools** are **removed** from the machine.

Pneumatic Connection

The Case Sealer requires a **70 PSIG [485 kPa gauge pressure], 2.5 SCFM [4,25 m^3/h 21° C 101 kPa]** compressed air supply. As illustrated in Figure 5, an on/off valve, pressure outlet regulator, and filter are provided to service the air supply.

The air supply line should be connected to the on/off valve by means fo the union fitting and hose clamp provided on the outer side of the on/off valve as illustrated. The customer supplied air hose should be slipped over the union ferrule and clamped tightly in place.

If another type of connector between the air supply line and on/off valve is desired, the union fitting and/or elbow can be removed and replaced with desired connector. The on/off valve **inlet port** has **1/8-28 British Standard pipe threads.**

Set-Up Procedure (Continued)

On-Off Valve - Refer to Figure 6.

The hand knob is utilized to turn the air supply to the pneumatic components on and off once the air supply line is connected and energized. The air supply is turned **"Off"** when the knob is **turned 180°, (arrow** points toward regulator as **shown) "On"** when **turned back 180°.**

Always turn the valve **"Off"** when the air supply line is being connected or disconnected.

Remove all packaging materials and tools from the machine. **Turn** the valve **"Off"** and connect the air line. **Turn** the valve **"On"** to energize the pneumatic components.

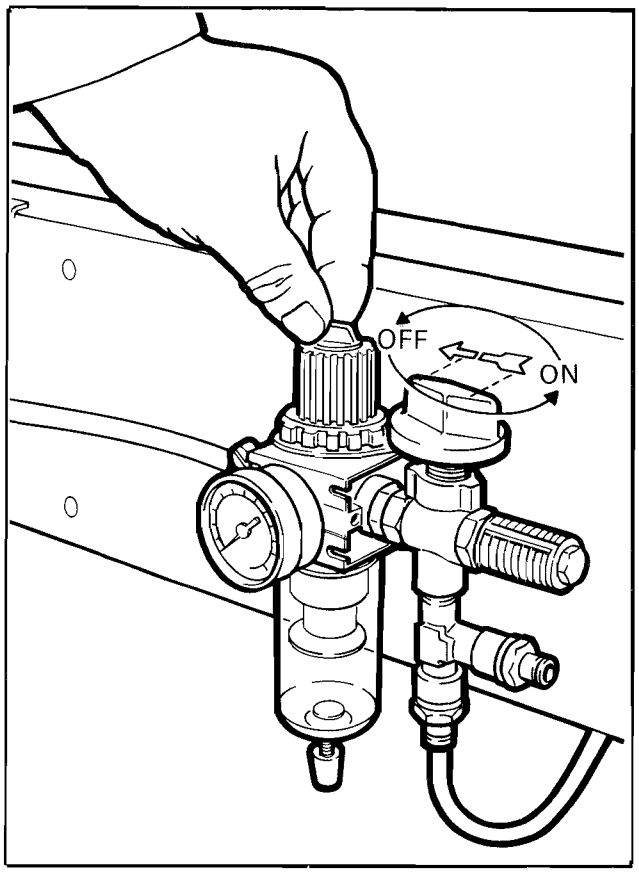

Figure 6 - Pressure Regulator and On-Off Valve.

Air Pressure Regulator -
Refer to Figure 6 - 7

The air pressure regulator has a red lock nut on top of the adjustment knob, as shown in Figure 6. The red lock nut should be loosened to unlock the knob for air pressure adjustments, and tightened to lock the knob after adjustment if desired.

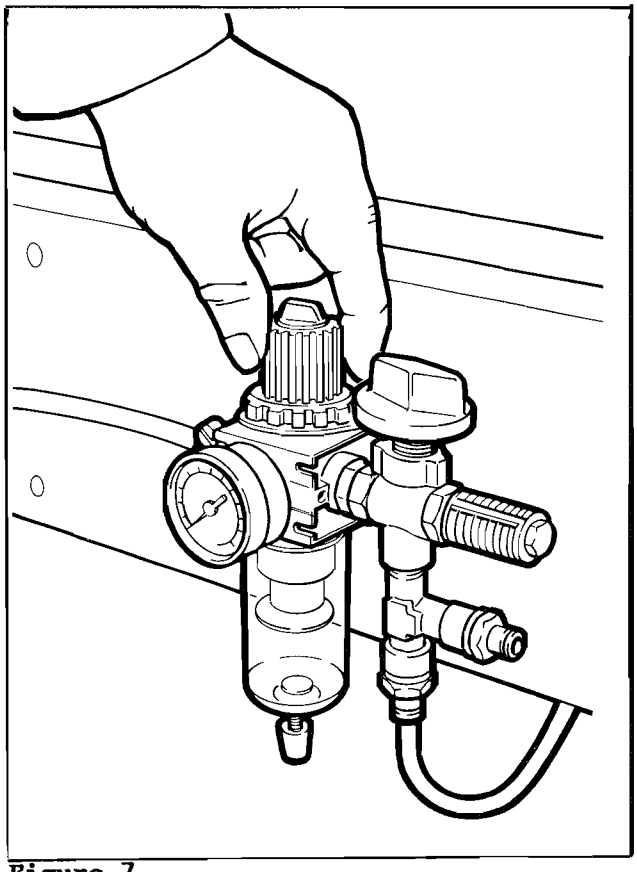

Figure 7

Pneumatic Components

Optical Warning System

The Case Sealer is equipped with an optical warning system to indicate in **"Red"** when the compressed air circuit is energized. An optical warning indicator is located on top of the frame supporting the upper head as shown in Figure 1.

IMPORTANT SAFEGUARDS

1. **BOTH THE TOP AND BOTTOM TAPING HEADS UTILIZE EXTREMELY SHARP KNIFE BLADES ON THE ORANGE CUTTER LEVER ASSEMBLY AND WHICH ARE LOCATED UNDER THE BLADE GUARD WHICH HAS THE "CAUTION - SHARP KNIFE" LABEL. BEFORE WORKING WITH THE TAPING HEADS OR ATTEMPTING TO LOAD THE TAPE, REFER TO FIGURE 8A AND IDENTIFY THE BLADE LOCATION. KEEP HANDS OUT OF THESE AREAS EXCEPT AS NECESSARY TO SERVICE THE TAPING HEADS.**

2. **NEVER ATTEMPT TO WORK ON THE TAPING HEADS OR LOAD TAPE WHEN THE BOX DRIVE BELTS ARE RUNNING.**

3. **BOX DRIVE MOTORS ARE DESIGNED TO RUN AT A MODERATE TEMPERATURE OF 104° F [40° C]. IN SOME CASES THEY MAY FEEL WARM TO THE TOUCH.**

4. **NEVER ATTEMPT TO REMOVE BOXES FROM THE EXIT END OF MACHINE WHILE MACHINE IS RUNNING.**

Tape Loading

The taping heads have been **pre-set** to accommodate **2 inch [50 mm]** wide tape rolls. To apply **1 1/2 inch or 36 mm or 1 3/4 inch or 42 mm wide tapes,** refer to **"Adjustments" Section** for set-up information. Two temporary **threading needles** are shipped in threaded position for initial tape **loading convenience.** Retain these for continued use in the tape loading operation.

For operator assistance, a threading diagram has been applied to the taping heads. However, **it is recommended** that the more detailed instruction and sketches in this manual be referred to the first few times the unit is loaded until the operator becomes thoroughly familiar with the tape loading operation. The **bottom taping head** can be **removed** from unit by lifting out for **convenience** in tape loading.

Tape Loading - Top Taping Head

WARNING-NEVER ATTEMPT TO WORK ON THE TAPING HEADS OR LOAD TAPE WHEN THE BOX DRIVE BELTS ARE RUNNING. PERSONNEL INJURY OR EQUIPMENT DAMAGE CAN POTENTIALLY RESULT.

1. It is first necessary to raise the top taping head. Utilize the height adjustment crank and move the top taping head to the fully raised position.

2. With the temporary threading needle already in position, as shown in Figure 8, follow the tape loading procedure from Figure 8C to complete the tape threading.

3. For subsequent tape loading operations, use the red plastic threading needle and follow the loading procedures from Figure 8B to complete the tape threading.

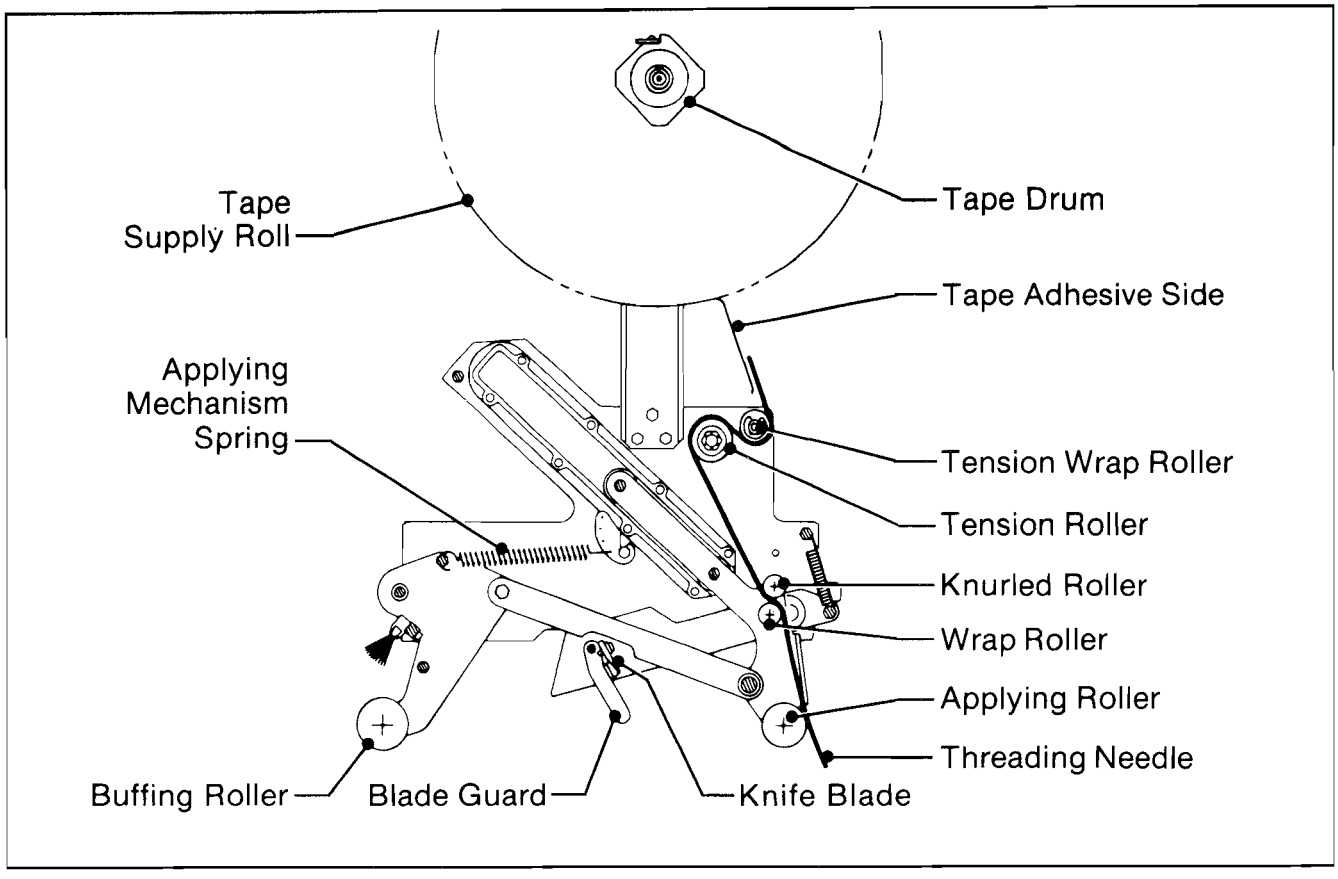

Figure 8 - Tape Threading Diagram - Top Taping Head - Left Side View

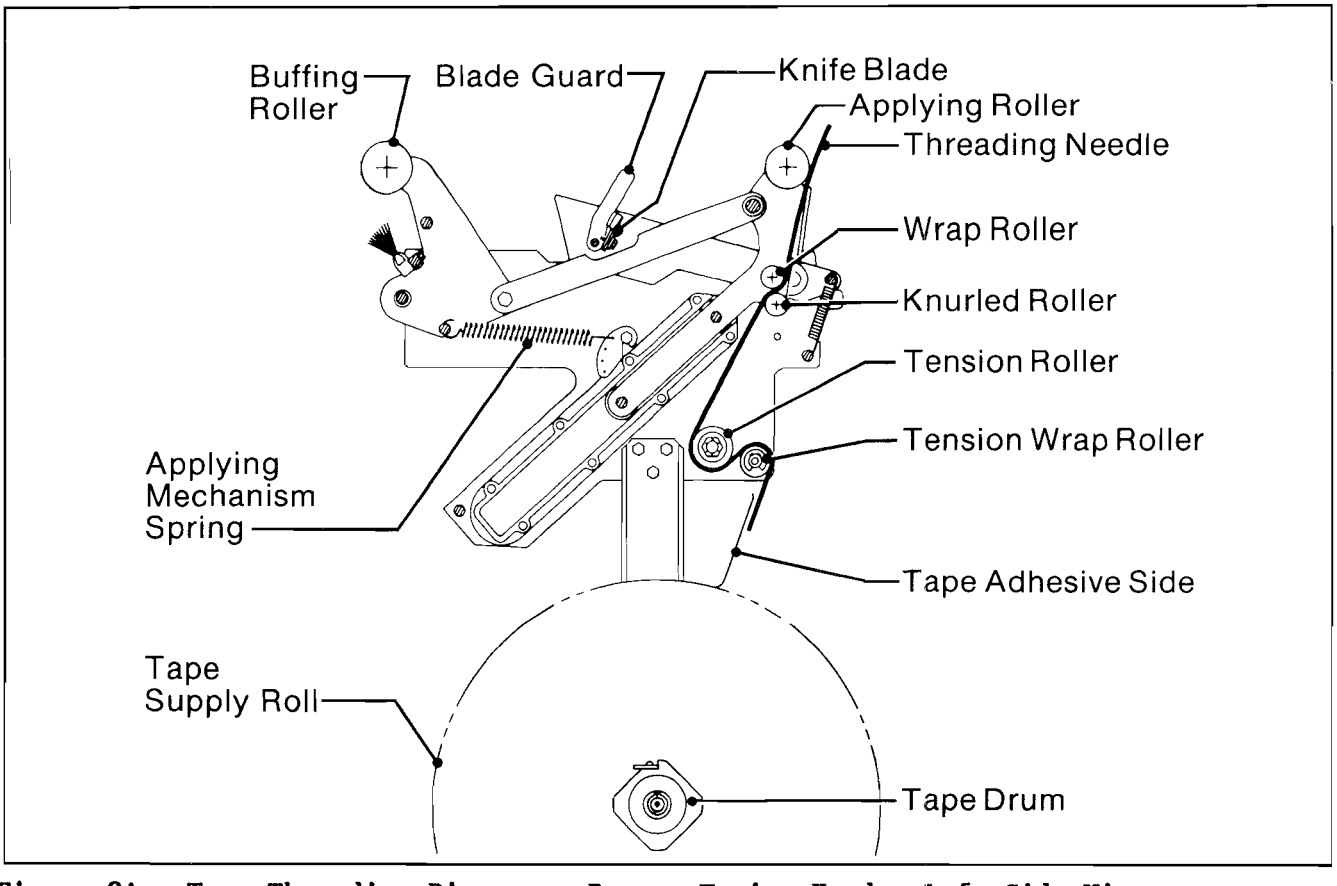

Figure 8A - Tape Threading Diagram - Bottom Taping Head - Left Side View

Set-Up Procedure (Continued)

Tape Loading - Bottom Taping Head
Refer to Figure 8A

The bottom taping head is loaded and threaded in the same manner as the top taping head.

For ease in loading, first remove the bottom taping head from the conveyor bed and follow the top taping head tape loading procedure.

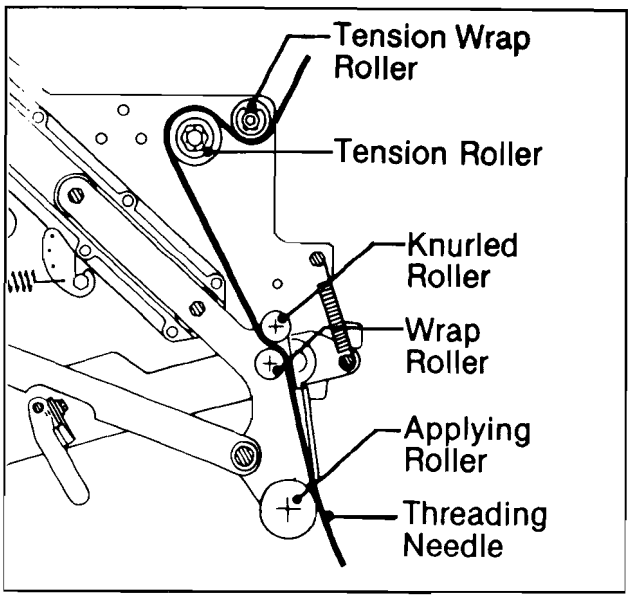

Figure 8B

Figure 8B

Insert the red plastic needle **downward** around rollers as illustrated.

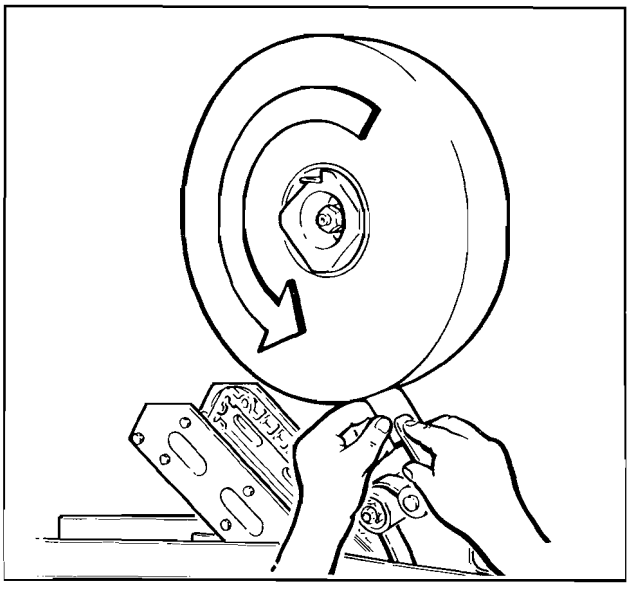

Figure 8C

Figures 8B and 8C

Place tape roll on drum to **dispense tape from bottom of roll** toward tension wrap roller with tape **adhesive side in.** Seat tape roll fully against back flange of drum. Adhere tape lead end to upper end of threading needle as shown.

Figure 8D

WARNING - USE CARE WHEN WORKING NEAR LADES AS BLADES ARE EXTREMELY SHARP. IF CARE IS NOT TAKEN, SEVERE INJURY TO PERSONNEL COULD RESULT.

Manually turn tape roll to create slack tape while pulling threading needle through tape applying mechanism until needle is through and tape is in alignment with applying roller.

Excess tape can be cut with a scissors or knife at applying roller.

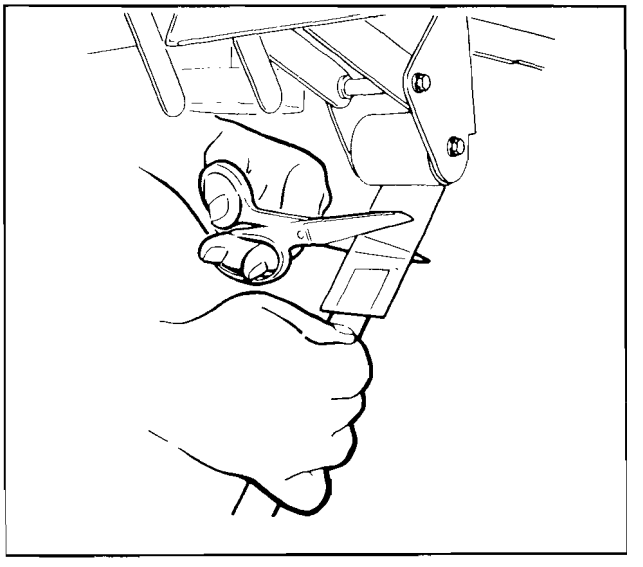

Figure 8D

Warning - be sure electrical switch is turned "OFF" before beginning Box Set-Up procedure.

Box Set-Up - Position I

Figure 9

Loosen the two hand knobs located on the side drive belts. Position the side drive belts to accommodate the desired box width.

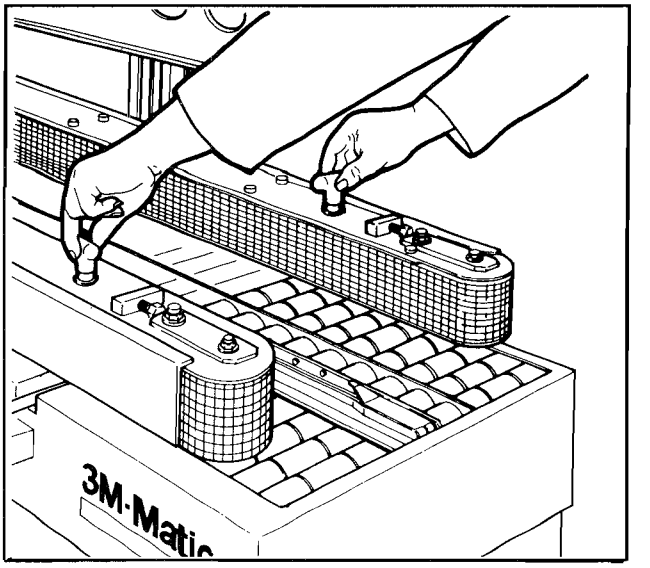

Figure 9

Figure 10

Place a product filled box on the infeed conveyor bed with the top flaps folded as shown.
Position the box 10 inches or 255 mm past the flap folder.

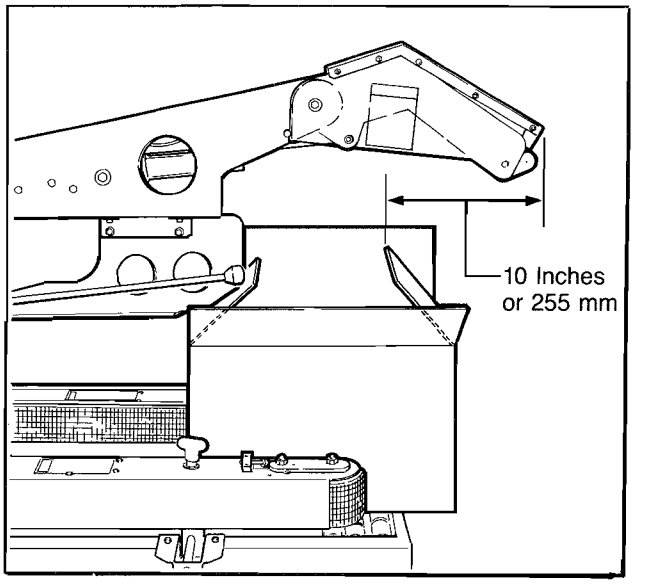

Figure 10

Figure 11

Locate the box stop cam against the lower front edge of the box and secure in this position.

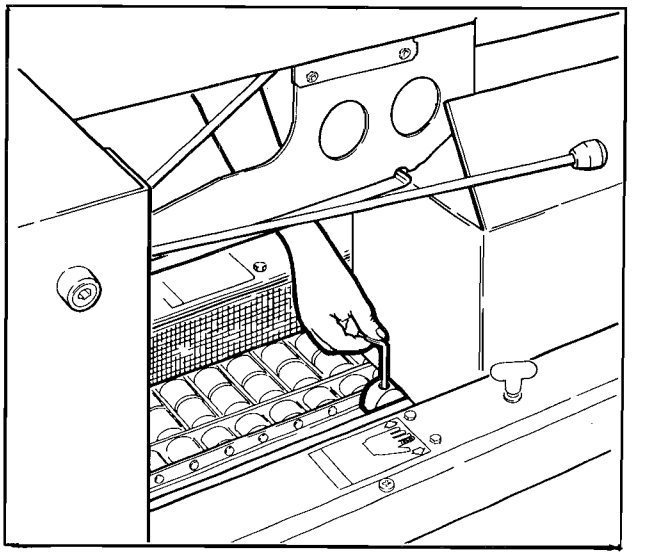

Figure 11

Set-Up Procedure (Continued)

Box Set-Up - Position II

Figure 12

Manually move the box forward on the conveyor bed to contact the **bottom** taping head applying roller.
With the box reasonably centered, lower the top flap folding assembly by means of the height adjustment crank as shown. The flap separator must contact and hold the top box flaps fully closed.

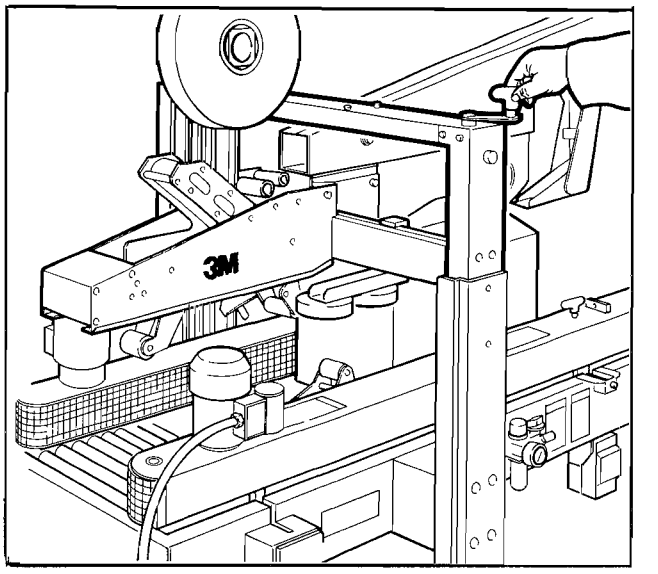

Figure 12

Figure 13

Position both side drive belts against the sides of the box to fully center the box on the conveyor bed. The side drive belts are positioned as shown by means of the side adjustment knob.

CAUTION - IF DRIVE BELTS ARE ALLOWED TO SLIP ON BOX, EXCESSIVE BELT WEAR WILL OCCUR.

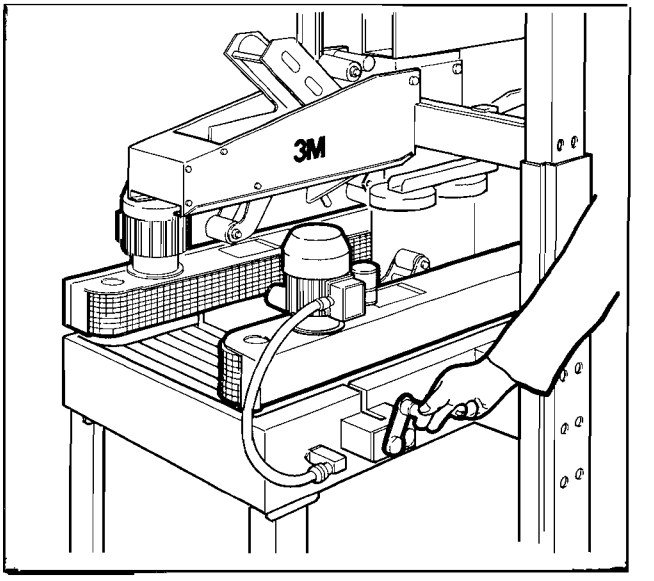

Figure 13

Figure 14

Tighten the two hand knobs to secure the drive belts.

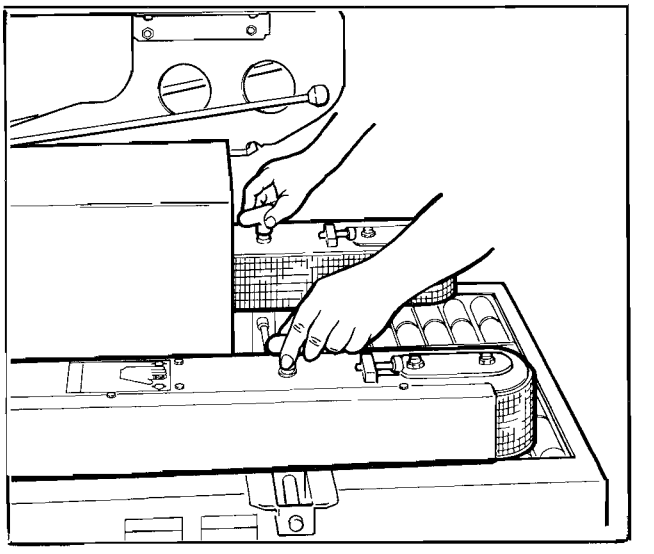

Figure 14

Set-Up Procedure (Continued)

Box Set-Up - Position III

Top Flap Compression Rollers

The top flap compression rollers, have **two mounting positions** to provide side compression through the full range of box widths.

The rollers have been **pre-assembled** in **position B** to accommodate box widths from 5 3/4 inches or 145 mm to 20 inches or 500 mm maximum. To accommodate box widths less than 5 3/4 inches or 145 mm to 4 3/8 inches or 110 mm minimum, move all rollers to **position A.**

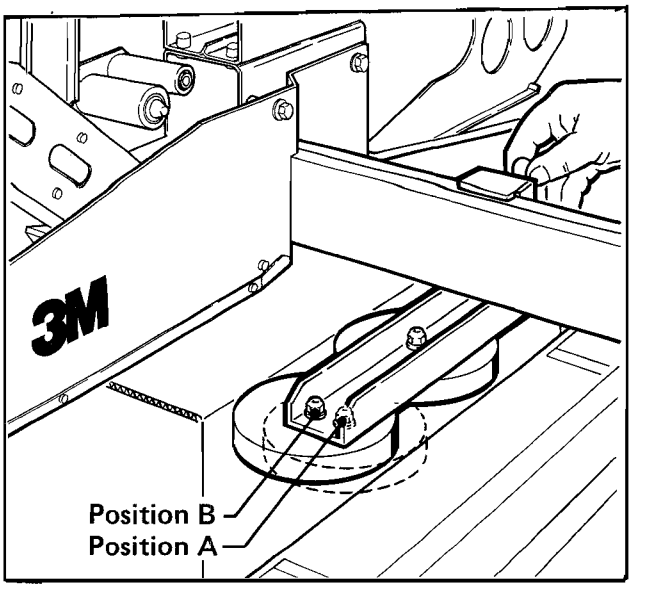

Figure 15

Figure 15

Manually move the box forward until the **top** taping head applying roller is in contact with the front of the box. Loosen the pressure roller locking knob and locate the pressure rollers on both sides of the top taping head against the top edge of the box. Tighten the locking knob to secure the pressure rollers setting.

WARNING - BE SURE ALL PACKAGING MATERIALS AND TOOLS ARE REMOVED FROM THE MACHINE BEFORE OPERATING.

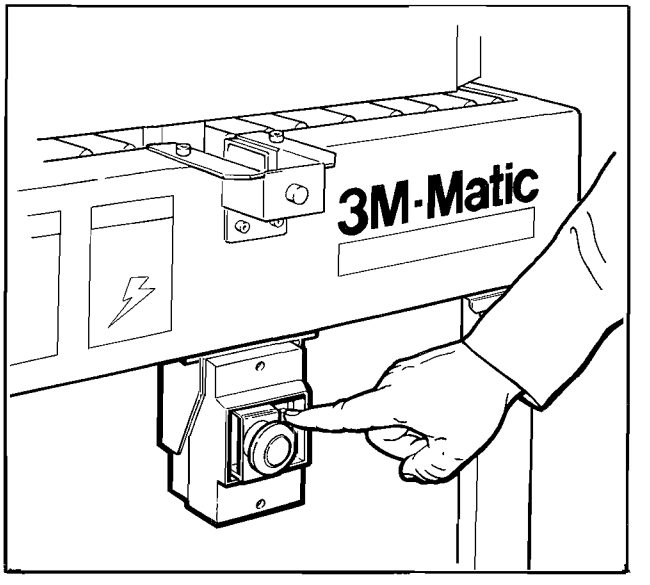

Figure 16

Figure 16

Press the electrical switch to **"ON"** to start the side drive belts to remove the set-up box from the Case Sealer.

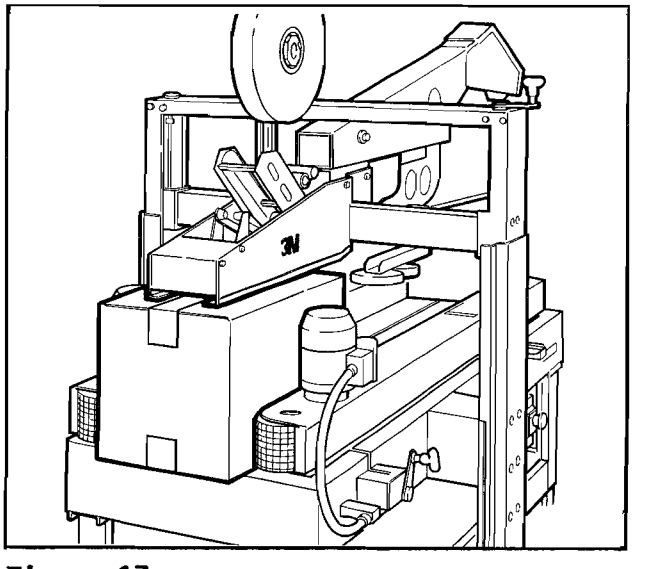

Figure 17

Figure 17

If the box is hard to move under the top head or is crushed, raise the top head slightly.
If the box movement is jerky or stops under the top head, move the side drive belts in slightly to add more pressure between the box and drive belts.
Turn the air valve hand knob to **"Off"** position, and connect the main air supply line.
Turn the hand knob 180° to energize the pneumatic components and the Case Sealer is ready for operation.

Adjustments

Tape Web Alignment

Refer to Figure 18

The tape drum assembly on each taping head is **pre-set to accommodate 2 inch [50 mm] wide tape,** but is adjustable to provide alignment of narrower tapes. If adjustment is necessary to center the tape width on the centerline of the taping head, (and therefore box center seam), make adjustment as follows:

1. **Loosen hand knob** behind tape drum on tape drum shaft.
2. **Turn tape drum shaft** in or out to center the tape web.
3. **Tighten hand knob** to secure the adjustment.

No other components require adjustment for tape web alignment.

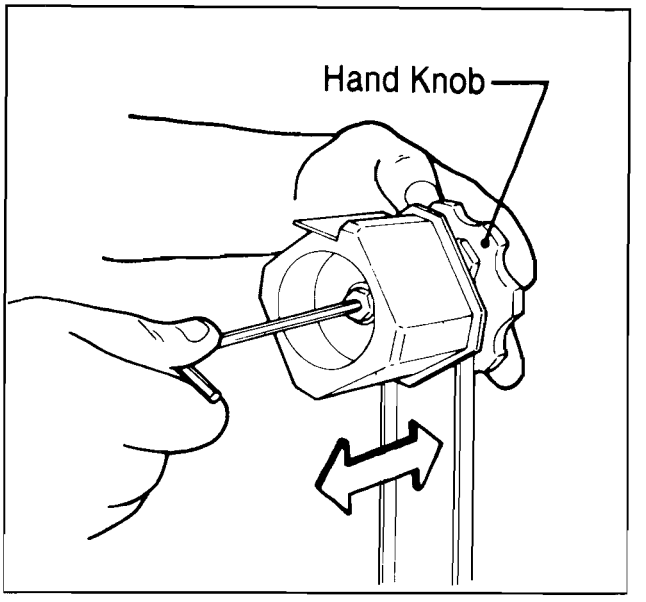

Figure 18

Applying Mechanism Spring

The applying mechanism spring, shown in Figures 8 and 8A, **controls** applying and buffing roller **pressure** on the box and **returns** the mechanism to the **reset position.** The spring pressure is **preset,** as shown in Figure 19A, for normal operation but is adjustable.

Removing the spring end loop from the spring holder and placing loop in other holes provided, as shown in Figure 19B, will decrease the spring pressure.

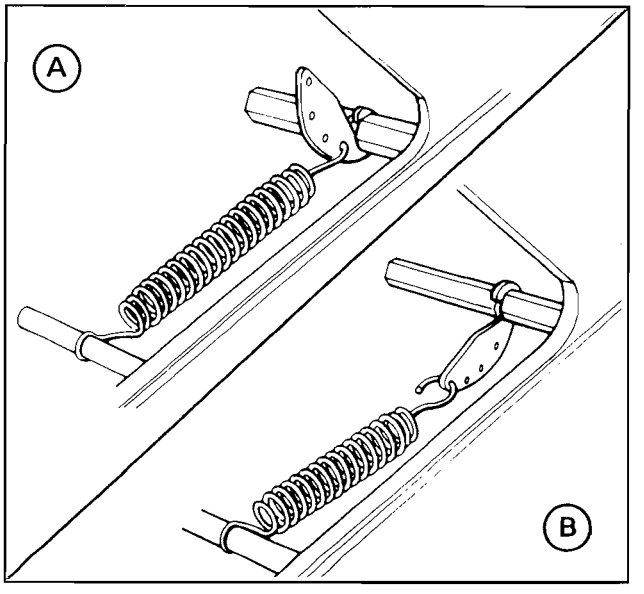

Figure 19

One Way Tension Roller Assembly

The one way tension roller, is facory set. When replacing this assembly, the roller must have **1 lb. [0,5 kg] tangential force** when turning. See Figure 20.

1. Wrap a cord or small strap (non-adhesive) 4-6 turns around the tension roller.
2. Attach a spring scale to the end of the cord or strap.
3. Turn the adjusting nut until a force of approximately 1 lb. [0,5 kg.] is required to turn the roller by pulling on the spring scale.

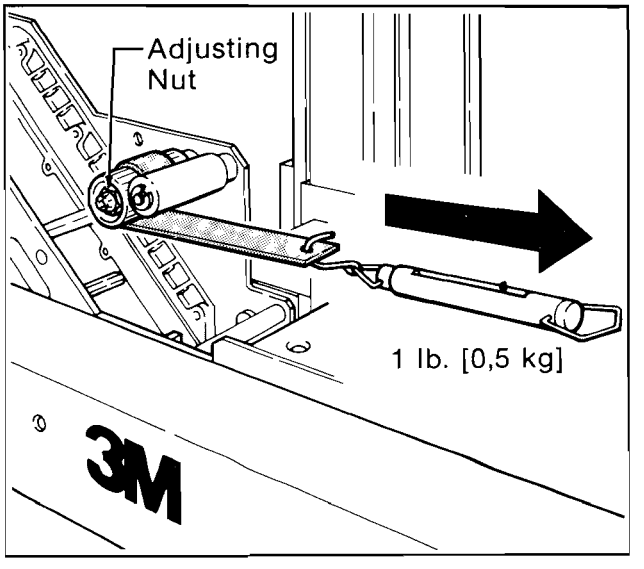

Figure 20

Maintenance

The 12AF Case Sealer has been designed for long, trouble free service. The machine will perform best when it receives **routine maintenance and cleaning.** Machine components that fail or wear excessively should be **promptly** repaired or replaced to **prevent damage** to other portions of the machine or to the product.

Tool Kit

Since the 12AF Case Sealer utilizes metric fasteners, a tool kit consisting of open end and hex socket wrenches is provided with the machine.

WARNING - TURN OFF ELECTRICAL POWER SUPPLY AND DISCONNECT POWER CORD FROM ELECTRICAL SUPPLY BEFORE BEGINNING MAINTNENACE. IF POWER CORD IS NOT DISCONNECTED, SEVERE INJURY TO PERSONNEL COULD RESULT. USE CARE WHEN REPLACING BLADES AS BLADES ARE EXTREMELY SHARP. IF CARE IS NOT TAKEN, SEVERE INJURY TO PERSONNEL COULD RESULT.

Blade Replacement:

Refer to Parts Illustrations **(yellow pages)**, Figure 1148.

1. **Loosen, but do not remove,** the blade screws (13) holding the blade. Remove the old blade.

2. Position the new blade with the beveled side **toward** the blade holder. Tighten the blade screws to secure the blade.

The **same steps** are followed on the **Top and Bottom Taping Heads.** Connect the main power supply.

Box Drive Belt Replacement

WARNING - TURN OFF MAIN AIR SUPPLY AND ELECTRICAL POWER BEFORE REMOVING ANY COMPONENTS.

Figure 21A

1. It is first necessary to raise the top taping head. Utilize the **height adjustment crank** and move the top taping head to the fully raised position.

2. **Disconnect** the motor plug (A).

3. Remove and retain the five screws (B) and side cover (C).

4. Remove and retain the screw (D), cap washer (E) and spacer washer (F) from the front and rear arm assembly pivots.

Maintenance (Continued)

Figure 21B

5. Lift belt drive assembly up off the arm assembly pivots.

6. Loosen, but do not remove the lock nut (H) on both the upper and lower belt tension assemblies.

7. Turn the belt adjustment screws (J) clockwise to end of adjustment on both the upper and lower tension assemblies.

8. Remove and discard old drive belt.

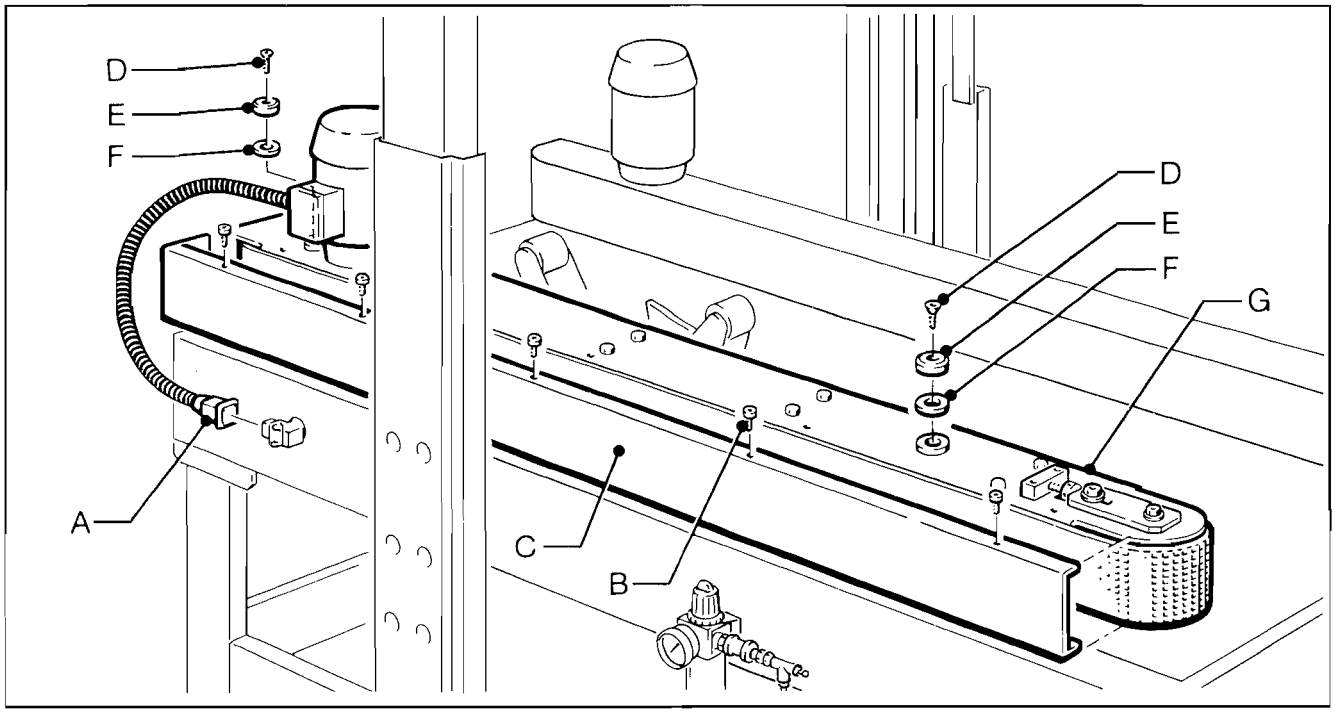

Figure 21A - Box Drive Belt - Case Sealer Left Side View Infeed End

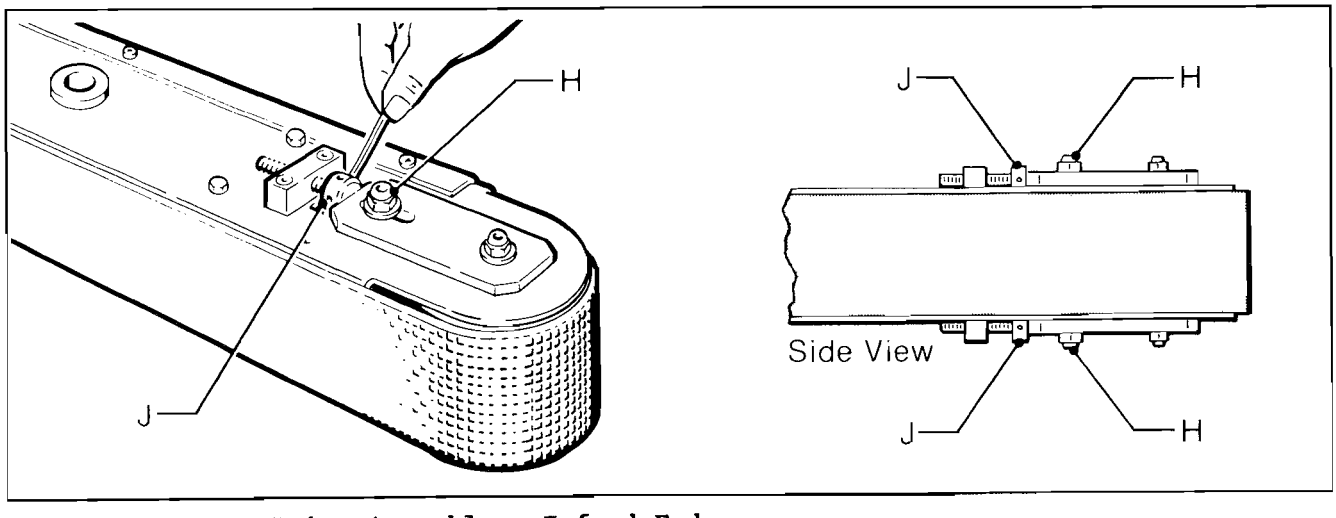

Figure 21B - Box Drive Assembly - Infeed End

Figure 21C

9. **Important** - Before installing the new drive belt - check the belt inside surface for drive direction arrows and install the belt accordingly. If no arrows are shown, the belt may be installed in either way.

   To Set Drive Belt Tension - Turn the adjustment screws (J) equally on both the upper and lower tension assemblies. Turn the screws clockwise to reduce belt tension, counterclockwise to increse belt tension.

   Use a force gauge to pull the belt outward one inch [25 mm] at the midspan, as shown with a moderate pulling force of 7 lbs. [3,5 kg]. Tighten the lock nut (H) on both tension assemblies to secure the tension setting.

10. Reverse procedures in items 1-5 above to reassemble the drive belt assembly.

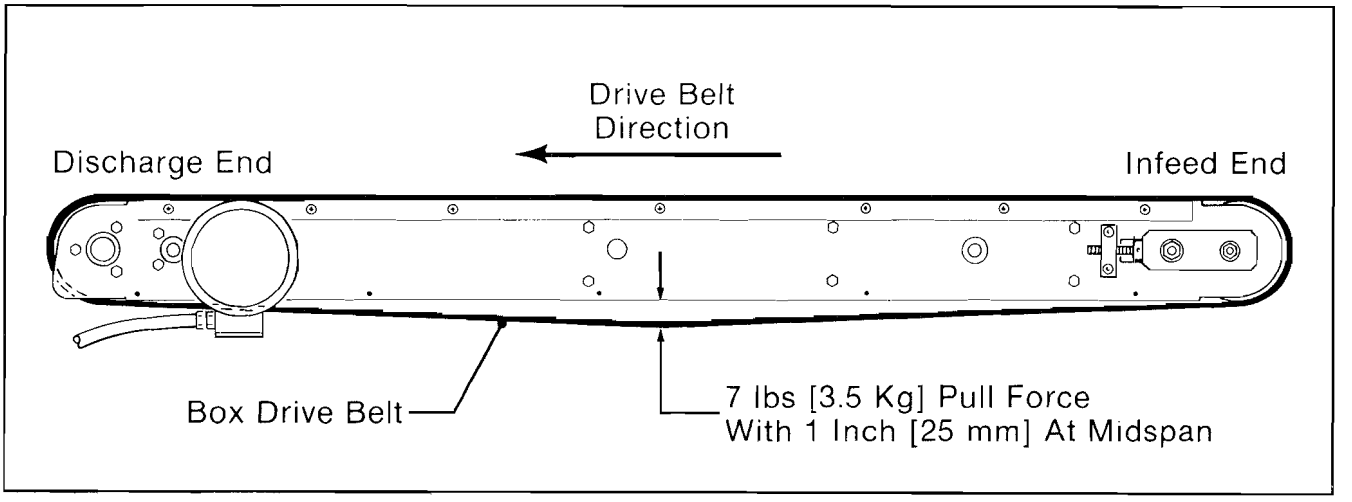

Figure 21C - Box Drive Belt Tension Adjustment - Top View

Cleaning Of The Machine

> **CAUTION - NEVER ATTEMPT TO REMOVE DIRT BY BLOWING IT OUT WITH COMPRESSED AIR. THIS CAN CAUSE THE DIRT TO BE BLOWN INSIDE THE MOTOR, AND SLIDING SURFACES. GRITTY DIRT IN THESE AREAS CAN CAUSE SERIOUS EQUIPMENT DAMAGE. NEVER WASH DOWN OR SUBJECT EQUIPMENT TO CONDITIONS CAUSING MOISTURE CONDENSATION ON COMPONENTS. SERIOUS EQUIPMENT DAMAGE COULD RESULT.**

Regular slotted containers produce a great deal of **dust** and **paper chips** when processed or handled in equipment. If this dust is allowed to build up on machine components, it can cause **component wear** and **overheating** of drive motor. The dust build up can best be removed from the machine by a shop vacuum. Depending on the number and type of boxes sealed in the 12AF Case Sealer, this **cleaning** should be done approximately **once per month.** If the boxes sealed are dirty, or if the environment in which the machine operates is dusty, cleaning on a more frequent basis may be necessary. **Excessive dirt** build up that cannot be removed by vacuuming should be wiped off with a **damp cloth.**

Cut-Off Blade:

Should tape **adhesive build-up** occur, carefully wipe clean with **oily cloth.**

Electrical Schematic

> **WARNING - TURN OFF ELECTRICAL POWER SUPPLY AND DISCONNECT POWER CORD FROM ELECTRICAL SUPPLY BEFORE BEGINNING MAINTENANCE. IF POWER CORD IS NOT DISCONNECTED, PERSONNEL COULD BE EXPOSED TO DANGEROUS VOLTAGES. SEVERE INJURY OR EQUIPMENT DAMAGE COULD RESULT.**

Figure 22 illustrates the electrical system of the 12AF Case Sealer. **No adjustments** to the electrical systems are **required.**

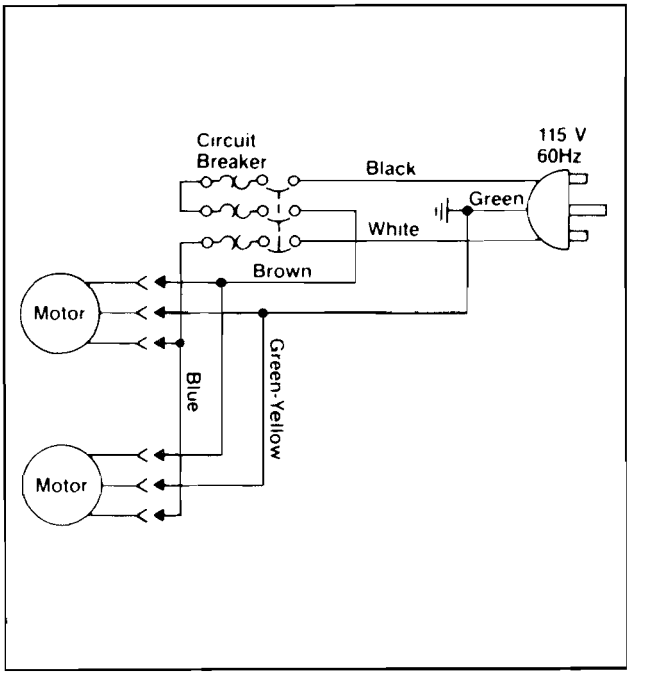

Figure 22

Circuit Breaker

The Case Sealer is equipped with a circuit breaker which trips the **"On-Off" switch** to tripped position. If circuit is **overloaded** and circuit breaker trips, **wait two minutes,** move to **"Off",** then turn **"On".** Located inside the electrical control box on the side of the main frame just below the conveyor bed, the circuit breaker has been **pre-set** and requires no further maintenance.

Lubrication - Pneumatic System

Air Line Filter

Figure 23

Periodically check the air line filter to drain water and clean as necessary. Do not allow the water to go above the filter element.

Lubrication - Mechanical

Like most other equipment, the Case Sealer must be properly lubricated to insure long, trouble/free service. Most of the **machine bearings** are **permanently lubricated** and sealed and do not need to be greased. The **drive motor** is also **permanently lubricated** and should not require additional lubrication.

Figures 24 & 25 illustrate the taping head and frame points which should be **lubricated** every **250 hours** of operation. The oil can supplied with the Case Sealer can be utilized to lubricate the rotating and pivoting points noted by the arrows with **SAE #30 non-detergent oil.** At the same time, a small amount of **multipurpose grease** should be applied to the end of each spring where the loop is secured at an eyelet, post, or hole.

CAUTION - WIPE OFF EXCESS OIL AND GREASE; IT WILL ATTRACT DUST AND DIRT WHICH CAN CAUSE PREMATURE EQUIPMENT WEAR AND JAMMING. TAKE CARE THAT OIL AND GREASE ARE NOT LEFT ON THE SURFACE OF ROLLERS AROUND WHICH TAPE IS THREADED, AS IT CAN CONTAMINATE THE TAPE'S ADHESIVE.

Blade Oiler Pad

The taping heads are equipped with a blade oiler pad that has been **pre-lubricated** at the factory to provide a film of oil on the cut-off blade to reduce adhesive build-up. Apply **SAE #30 non-detergent oil** as needed. **Do not saturate.**

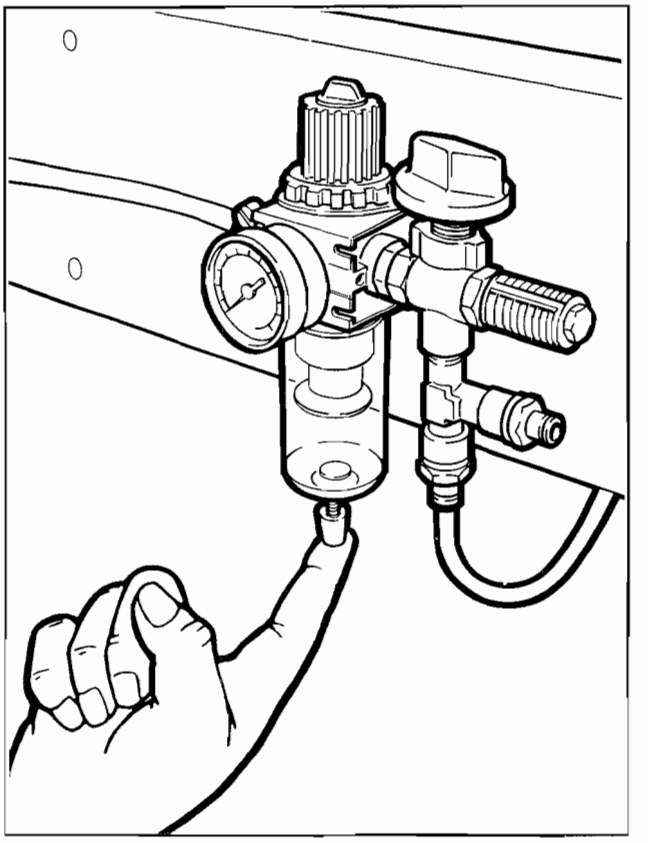

Figure 23 - Air Line Filter

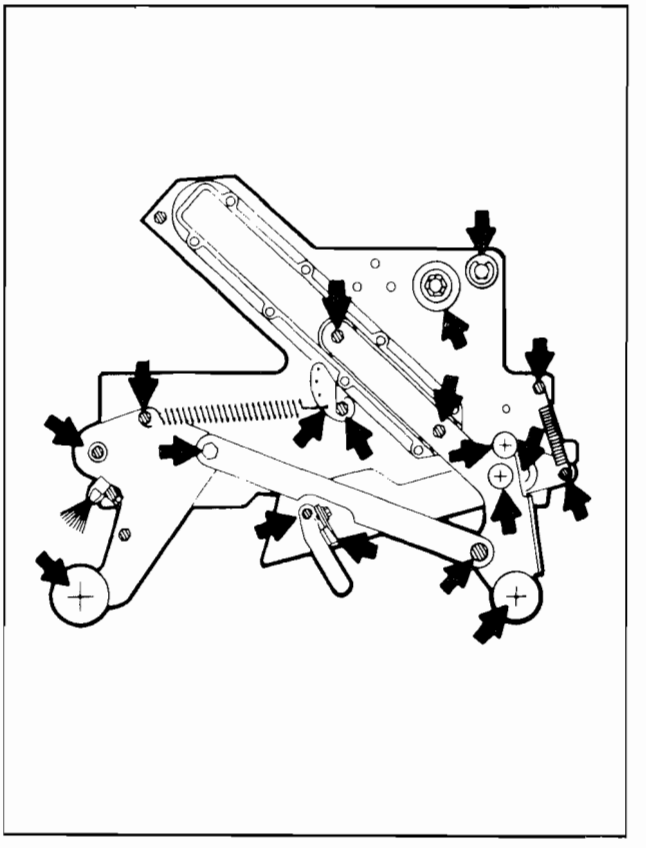

Figure 24 - Lubriation Points - Top And Bottom Taping Head

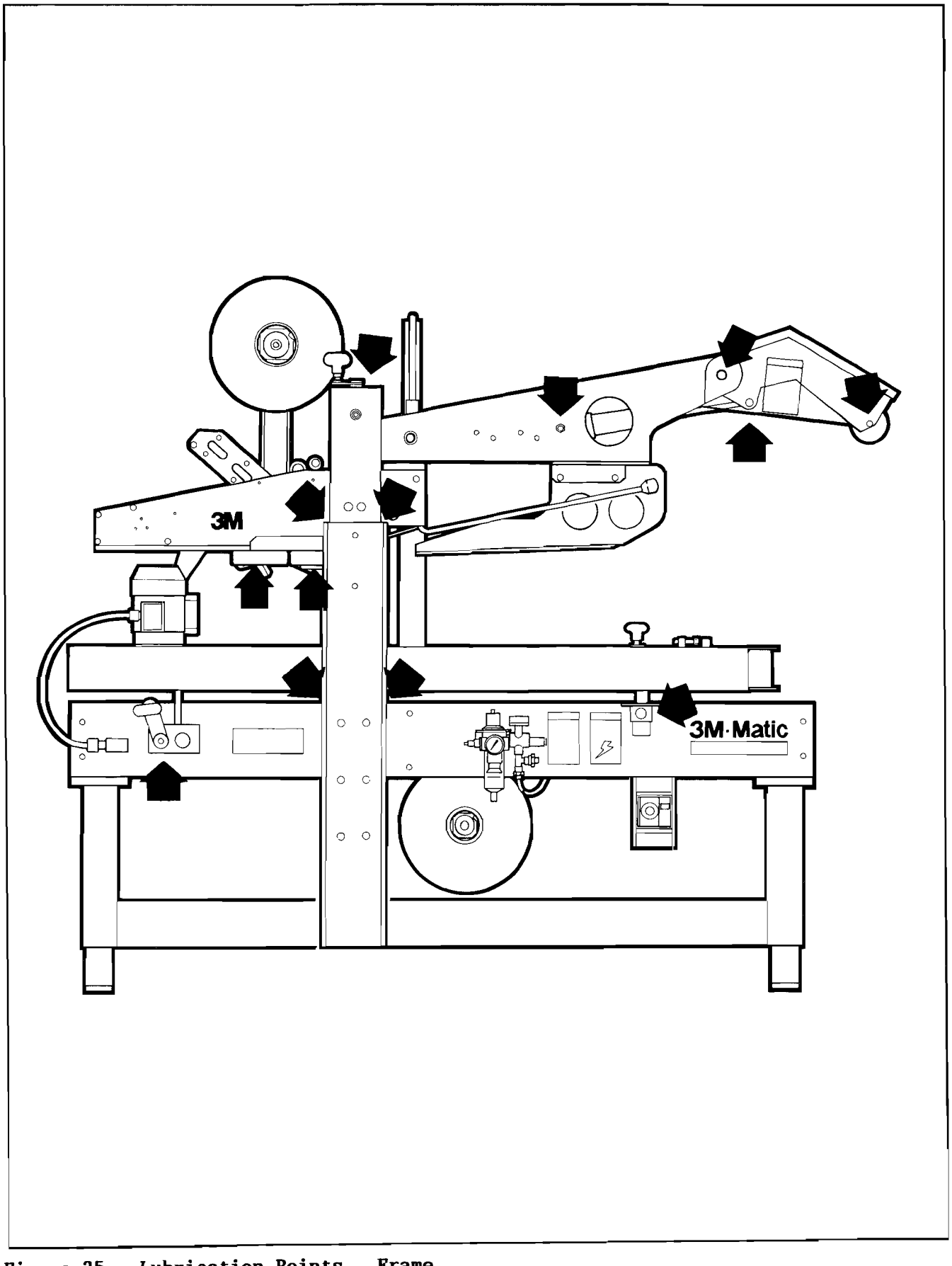

Figure 25 - Lubrication Points - Frame

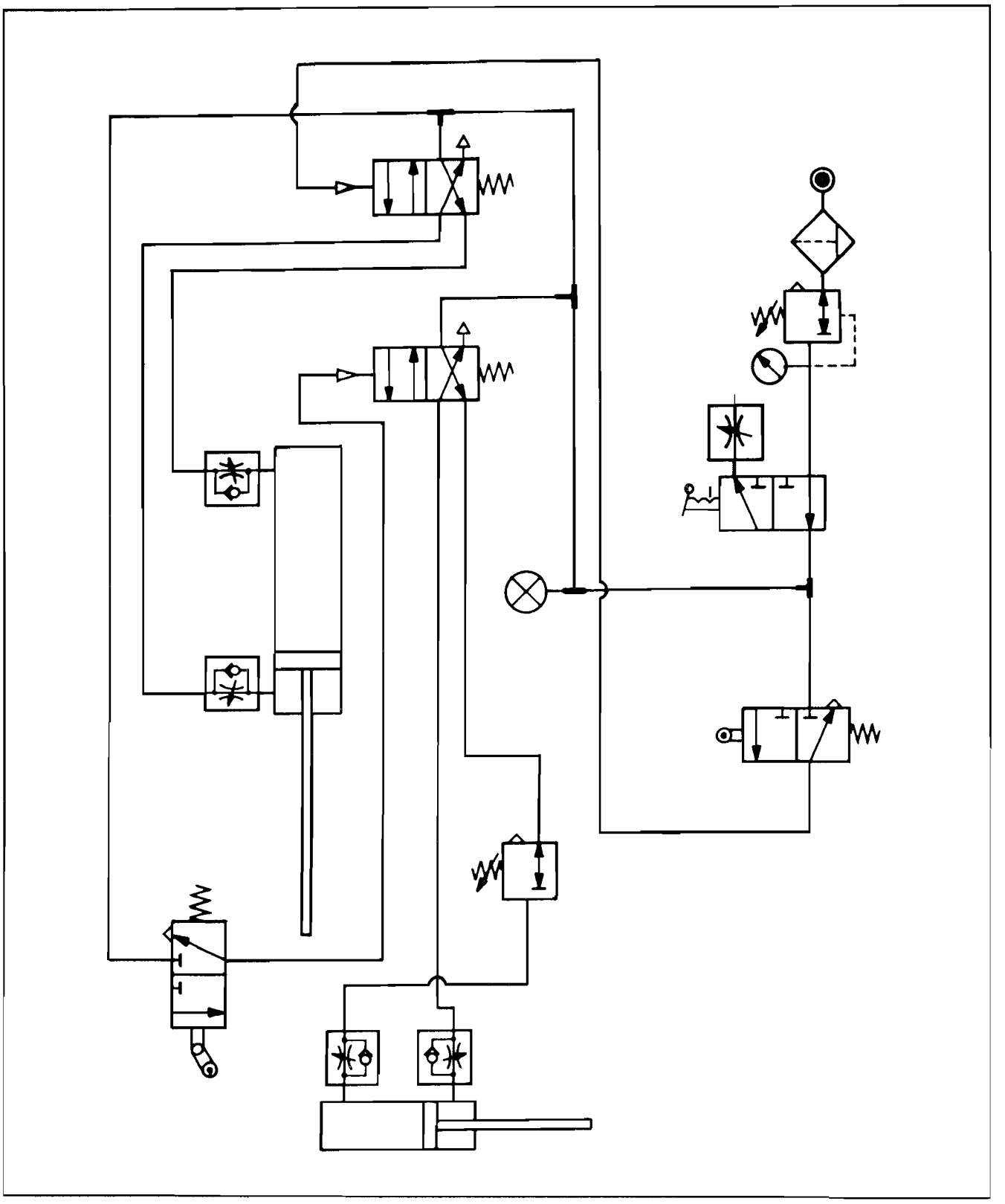

Figure 26 - Pneumatic Schematic

Pneumatic Schematic

Figure 26 illustrates the pneumatic system of the Case Sealer. No adjustment for the components is required. A similar pneumatic schematic is mounted on the machine.

Replacement Parts And Service Information

Spare Parts

It is suggested that the following spare parts be ordered and kept on hand:

Qty.	Ref. No.	3M Part Number	Description
1	1145-6	78-8017-9101-9	Roller - Applying
1	1146-5	78-8017-9140-7	Roller - Buffing
1	1146-10	78-8052-6589-5	Spring - Extension Top
2	1148-2	78-8017-9173-8	Blade - 2.56 inch/65 mm
2	1148-10	78-8052-6602-6	Spring - Cutter
1	1198-11	78-8054-8550-1	Spring - Extension Bottom
2	1654-10	~~78-8055-0654-6~~ 78-8054-8841-4	Belt - Drive

Tool Kit

The tool kit, P/N 78-8054-8732-5, is available as a stock item. The kit contains the necessary wrenches and an oil can. Threading tool, Part No. 78-8017-9433-6, contained in above kit is also available as a replacement stock item. Refer to **"How To Order Replacement Parts"** for ordering information.

How To Order Replacement Parts

1. Order parts by **part number, part name, machine catalog number, model number** and **part quantity** required.

> **Minimum billing on parts orders will be $10.00.**
> **Replacement part prices available on request.**

2. Replacement parts and part prices available direct from:

Dispenser Parts
Route 4, Box 5B
Amery, WI 54001

Note - Outside the U.S. contact the local 3M subsidiary for parts order information.

3. Refer to the front of the instruction manual for **3M equipment service** information.

Attachments

Additional information on the attachments listed below is included with the manual except where noted:

Part Number	Attachment Name
78-8059-5535-4	12AF-IF Infeed Conveyor, Model 28700

1. Refer to **Taping Head Assemblies figure** to find all the parts illustrations identified by **figure numbers.**

2. Refer to the figure or figures to determine the **individual parts** required and the **parts reference number.**

3. The **replacement parts list,** that follows each illustration, includes the **part number** and **part description** for the parts in that illustration.

> **Note** - The complete description has been included for standard **fasteners** and some commercially available **components.** This has been done to allow obtaining these standard parts locally, should the customer elect to do so.

4. Refer to page 24 - **"Replacement Parts and Service Information"** of this manual for replacement parts ordering information.

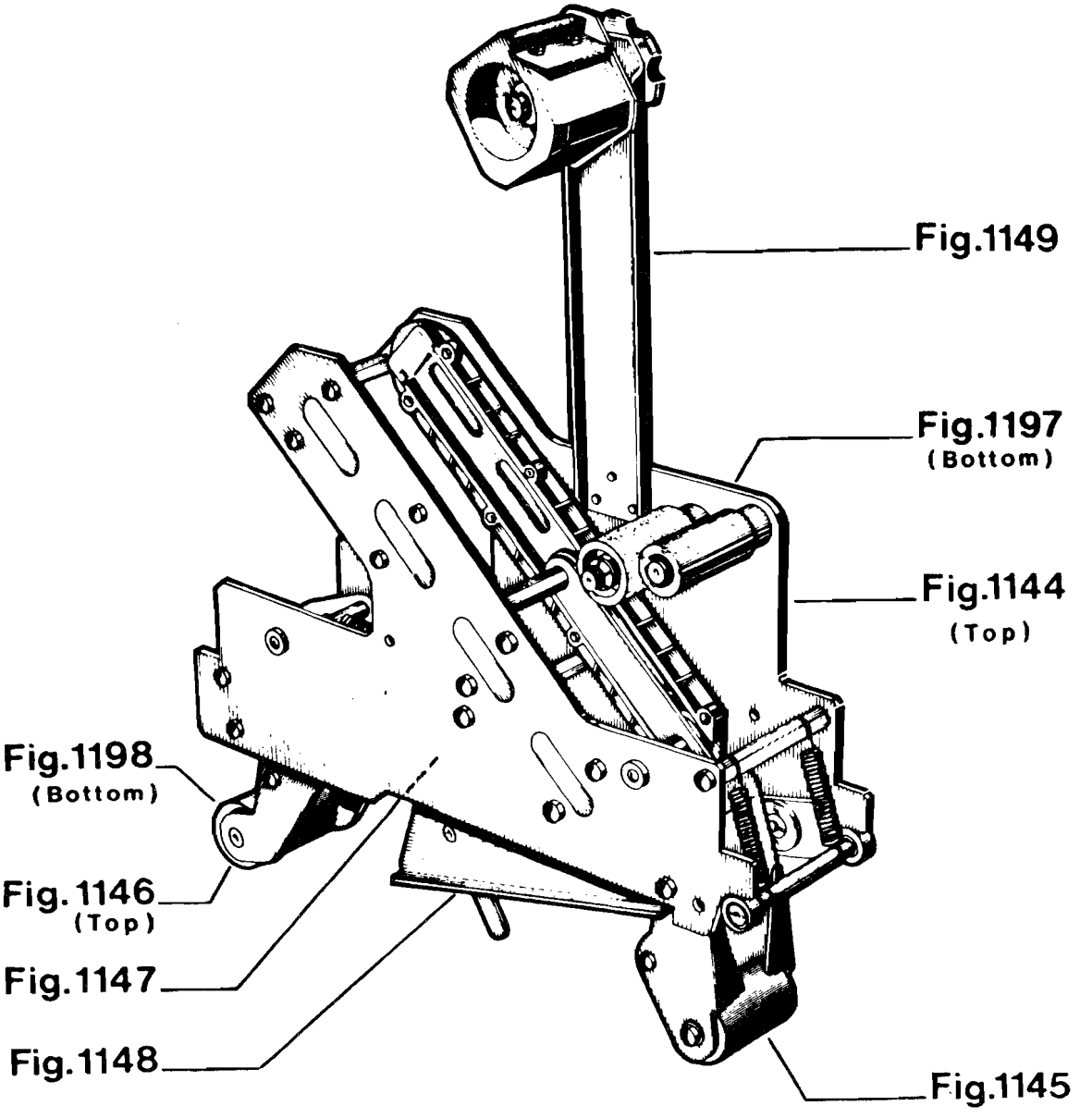

TAPING HEAD ASSEMBLIES

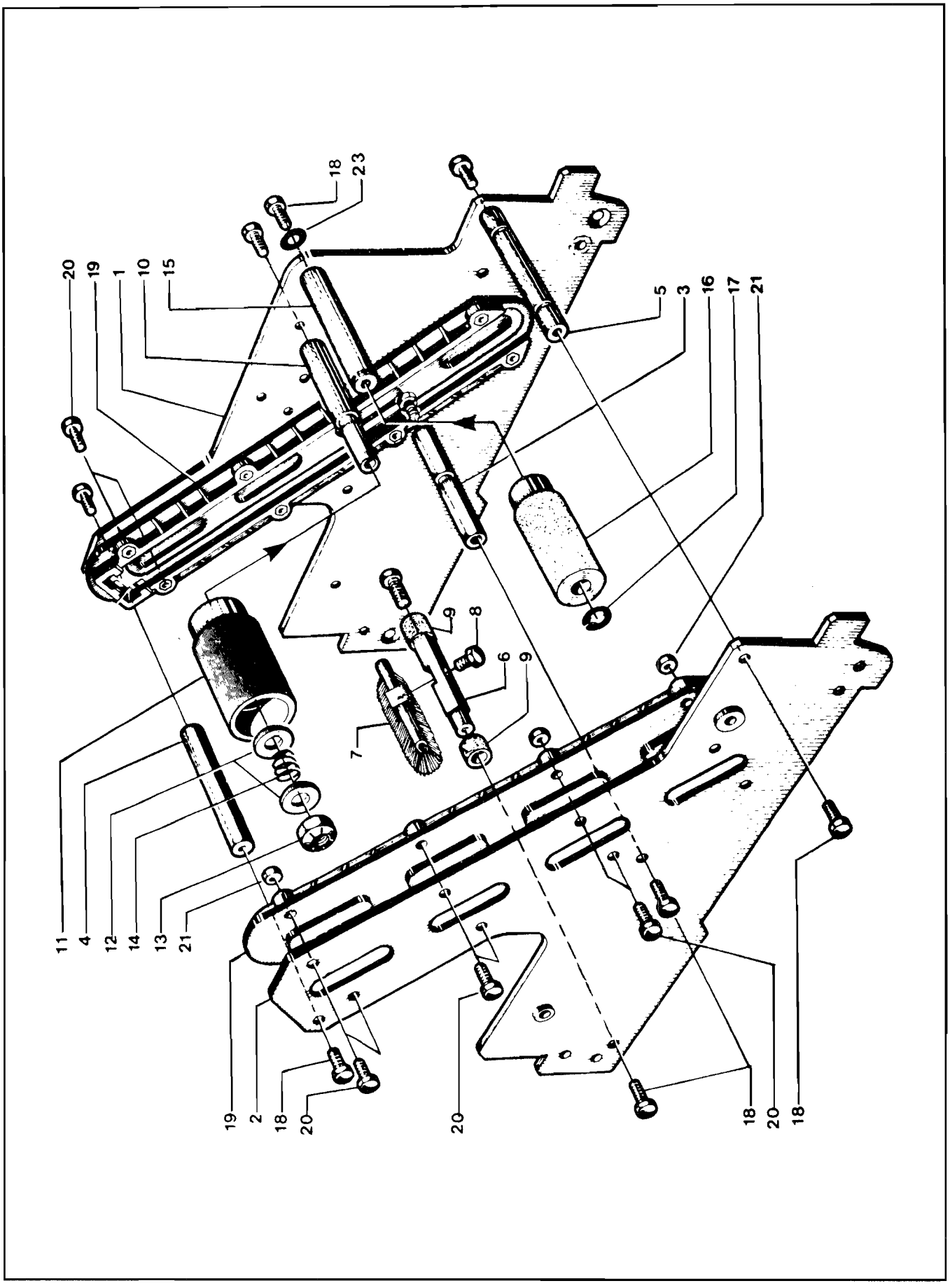

FIGURE 1144 TOP

Figure 1144

Ref. No.	3M Part No.	Description
1144-1	78-8052-6556-4	Frame - R/H Top
1144-2	78-8052-6557-2	Frame - L/H Top
1144-3	78-8052-6558-0	Spacer - Spring Hook
1144-4	78-8052-6559-8	Spacer - Upper
1144-5	78-8052-6560-6	Spacer - Front
1144-6	78-8052-6561-4	Spacer - Brush Holder
1144-7	78-8052-6562-2	Buffing Brush Assy.
1144-8	78-8018-7798-2	Screw - Hex Hd. M5 x 14 Zinc Pl.
1144-9	78-8052-6563-0	Bumper
1144-10	78-8052-6564-8	Shaft - Tension Roller
1144-11	78-8052-6565-5	Roller - Top Tension
1144-12	78-8052-6566-3	Washer - Friction
1144-13	78-8017-9077-1	Nut - Hex M10 x 1
1144-14	78-8052-6567-1	Spring - Compression
1144-15	78-8052-6568-9	Shaft - Wrap Roller
1144-16	78-8052-6569-7	Roller - Wrap
1144-17	26-1000-1613-3	Ring - Retaining, No. 10
1144-18	26-1003-5828-7	Screw - Hex Hd. M6 x 10 Zinc Pl.
1144-19	78-8052-6570-5	Guide
1144-20	83-0002-7336-3	Screw - Hex Hd. M4 x 14 Zinc Pl.
1144-21	78-8010-7416-8	Nut - Hex M4 Zinc Pl.
1144-23	26-1000-0010-3	Washer - Flat M6

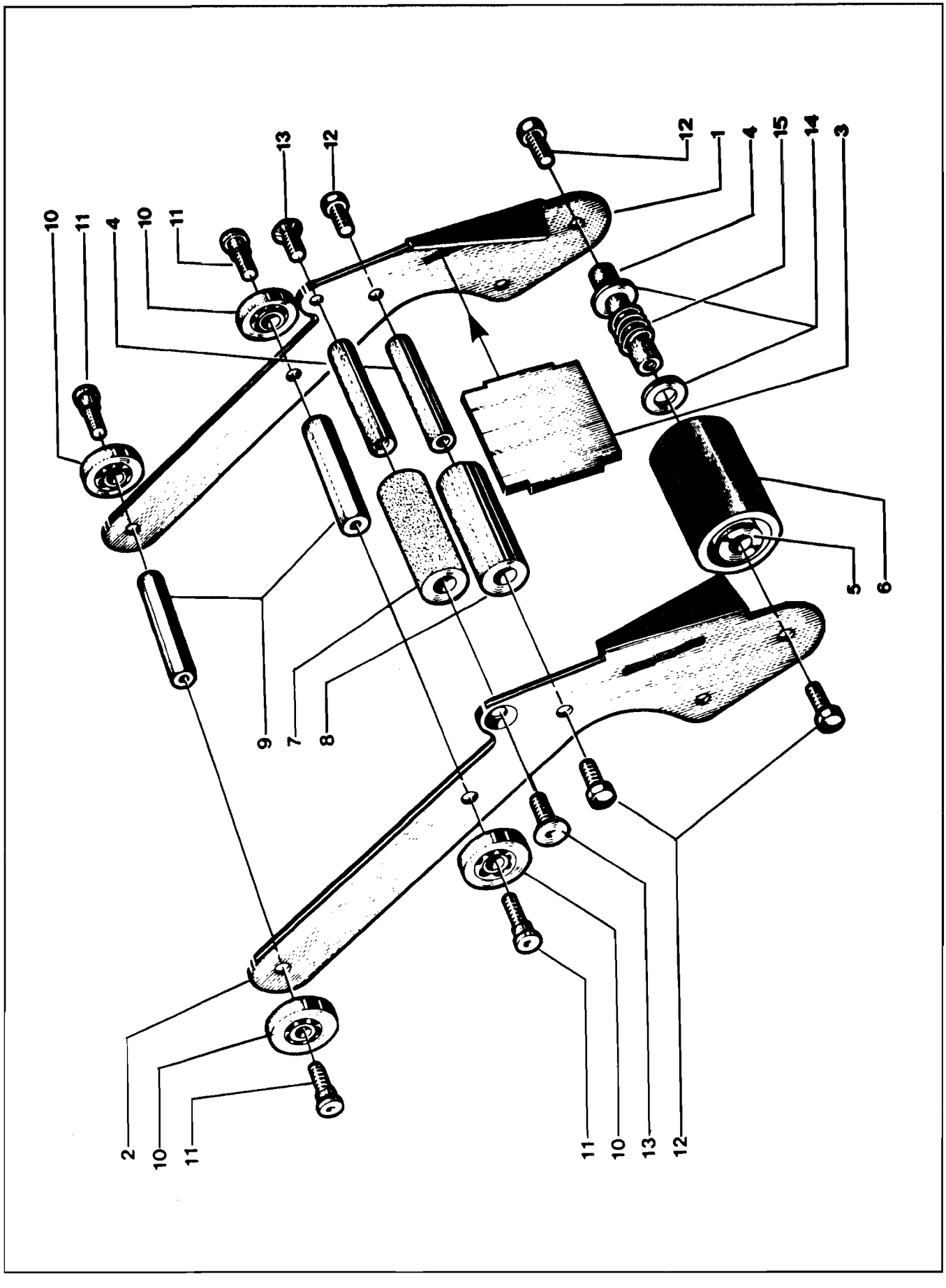

FIGURE 1145

Figure 1145

Ref. No.	3M Part No.	Description
1145-1	78-8052-6572-1	Frame - Applying R/H
1145-2	78-8052-6573-9	Frame - Applying L/H
1145-3	78-8052-6574-7	Plate - Back Up
1145-4	78-8052-6575-4	Shaft - Roller
1145-5	78-8052-6576-2	Bushing - Roller
1145-6	78-8017-9101-9	Roller - Applying
1145-7	78-8052-6578-8	Roller - Knurled
1145-8	78-8052-6579-6	Roller - Wrap
1145-9	78-8052-6580-4	Spacer
1145-10	78-8017-9082-1	Bearing - Special 30 mm
1145-11	78-8017-9106-8	Screw - Bearing Shoulder
1145-12	26-1003-5828-7	Screw - Hex Hd. M6 x 10 Zinc Pl.
1145-13	26-1005-4759-0	Screw - Flat Hd M6 x 12 Zinc Pl.
1145-14	78-8052-6581-2	Washer - Friction
1145-15	78-8052-6582-0	Spring - Compression

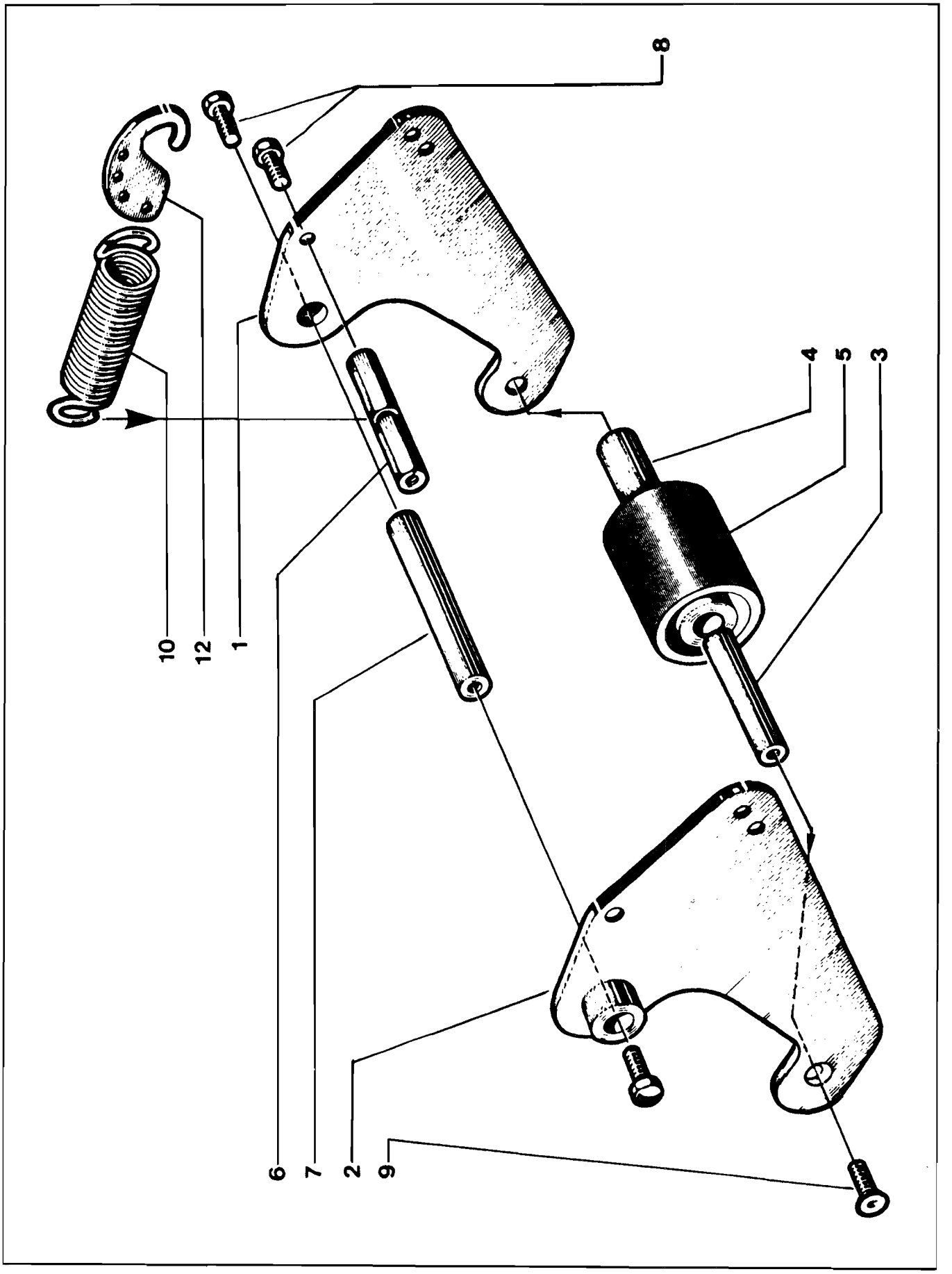

FIGURE 1146 TOP

Figure 1146

Ref. No.	3M Part No.	Description
1146-1	78-8052-6583-8	Frame - R/H
1146-2	78-8052-6584-6	Frame - L/H
1146-3	78-8052-6585-3	Shaft - Buffing Roller
1146-4	78-8052-6586-1	Bushing - Buffing Roller
1146-5	78-8017-9140-7	Roller - Buffing
1146-6	78-8052-6587-9	Spacer - Spring
1146-7	78-8017-9109-2	Shaft - Buffing Assy.
1146-8	26-1002-5830-5	Screw - Hex Hd M6 x 10
1146-9	26-1005-4759-0	Screw - Flat Hd M6 x 12
1146-10	78-8052-6589-5	Spring - Top Ext.
1146-12	78-8052-6590-3	Holder - Spring

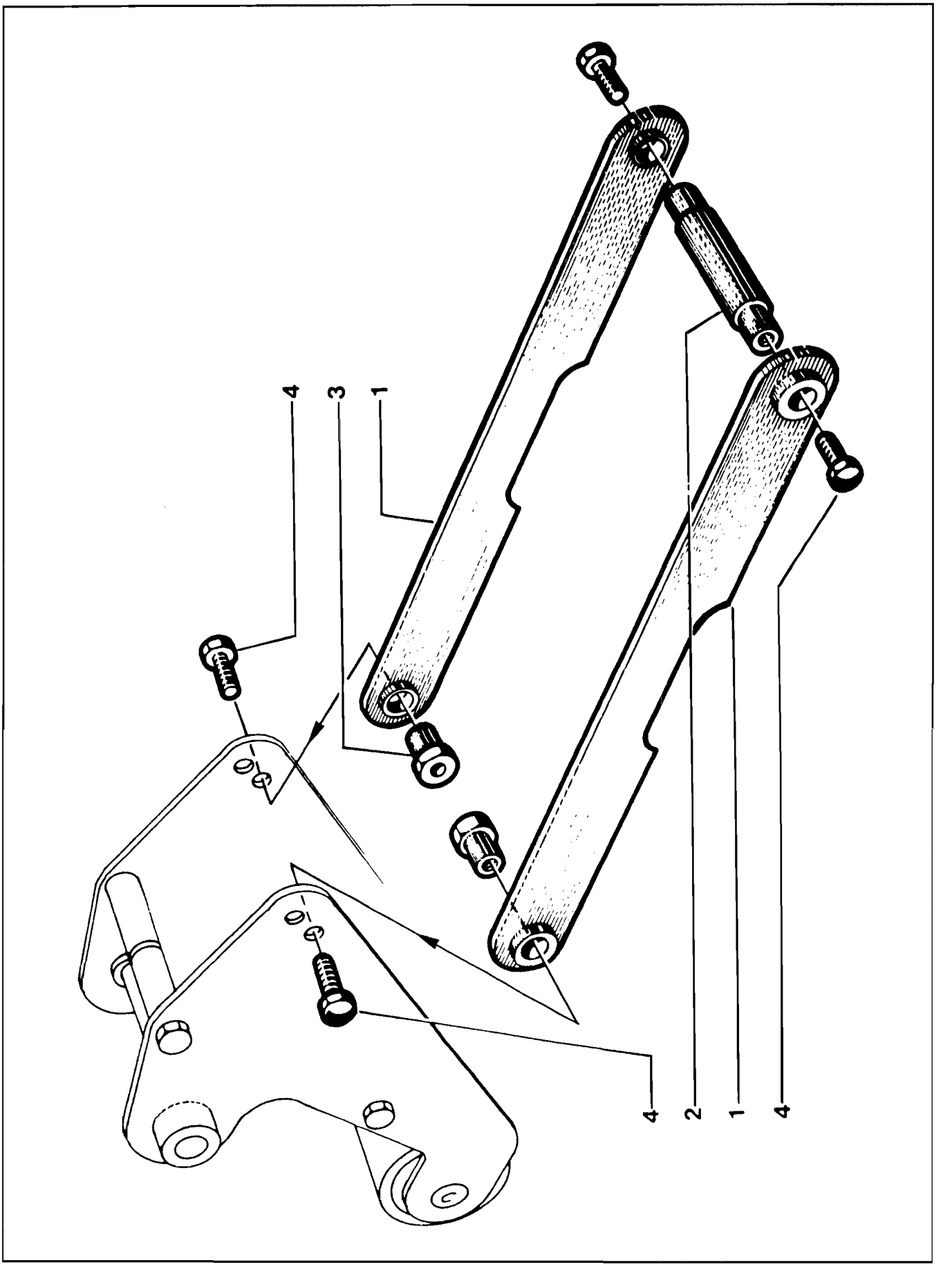

FIGURE 1147

Figure 1147

Ref. No.	3M Part No.	Description
1147-1	78-8052-6592-9	Arm - Link
1147-2	78-8052-6593-7	Shaft - Pivot
1147-3	78-8052-6594-5	Bushing - Pivot
1147-4	78-8010-7163-6	Screw - Hex Hd M5 x 10 Zinc Pl.

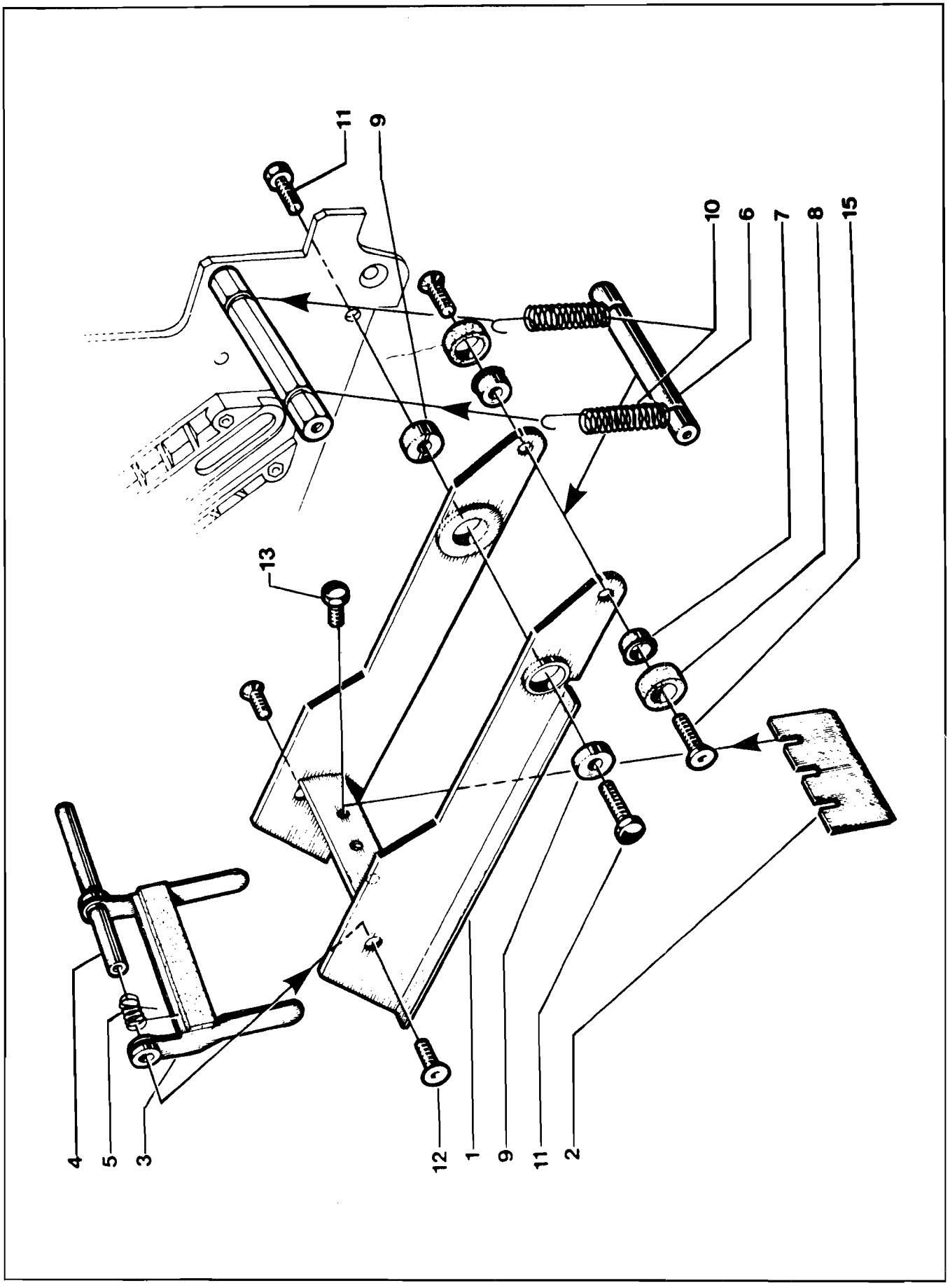

FIGURE 1148

Figure 1148

Ref. No.	3M Part No.	Description
1148-1	78-8052-6595-2	Bracket - Cut-off
1148-2	78-8017-9173-8	Blade - 2.56 Inch/65 mm
1148-3	78-8052-6596-0	Guard - Blade
1148-4	78-8052-6597-8	Shaft - Blade Guard
1148-5	78-8052-6598-6	Spring - Tension
1148-6	78-8017-9135-7	Shaft - Spacer
1148-7	78-8052-6600-0	Bumper
1148-8	78-8017-9133-2	Spacer
1148-9	78-8017-9132-4	Pivot - Cutter Lever
1148-10	78-8052-6602-6	Spring - Cutter
1148-11	26-1002-5829-7	Screw - Hex Hd M6 x 10 Zinc Pl.
1148-12	26-1005-4758-2	Screw - Flat Hd M5 x 20 Zinc Pl.
1148-13	78-8052-6747-9	Screw - Hex Hd M5 x 8 Zinc Pl.
1148-15	26-1005-4757-4	Screw - Flat Hd M4 x 10 Zinc Pl.

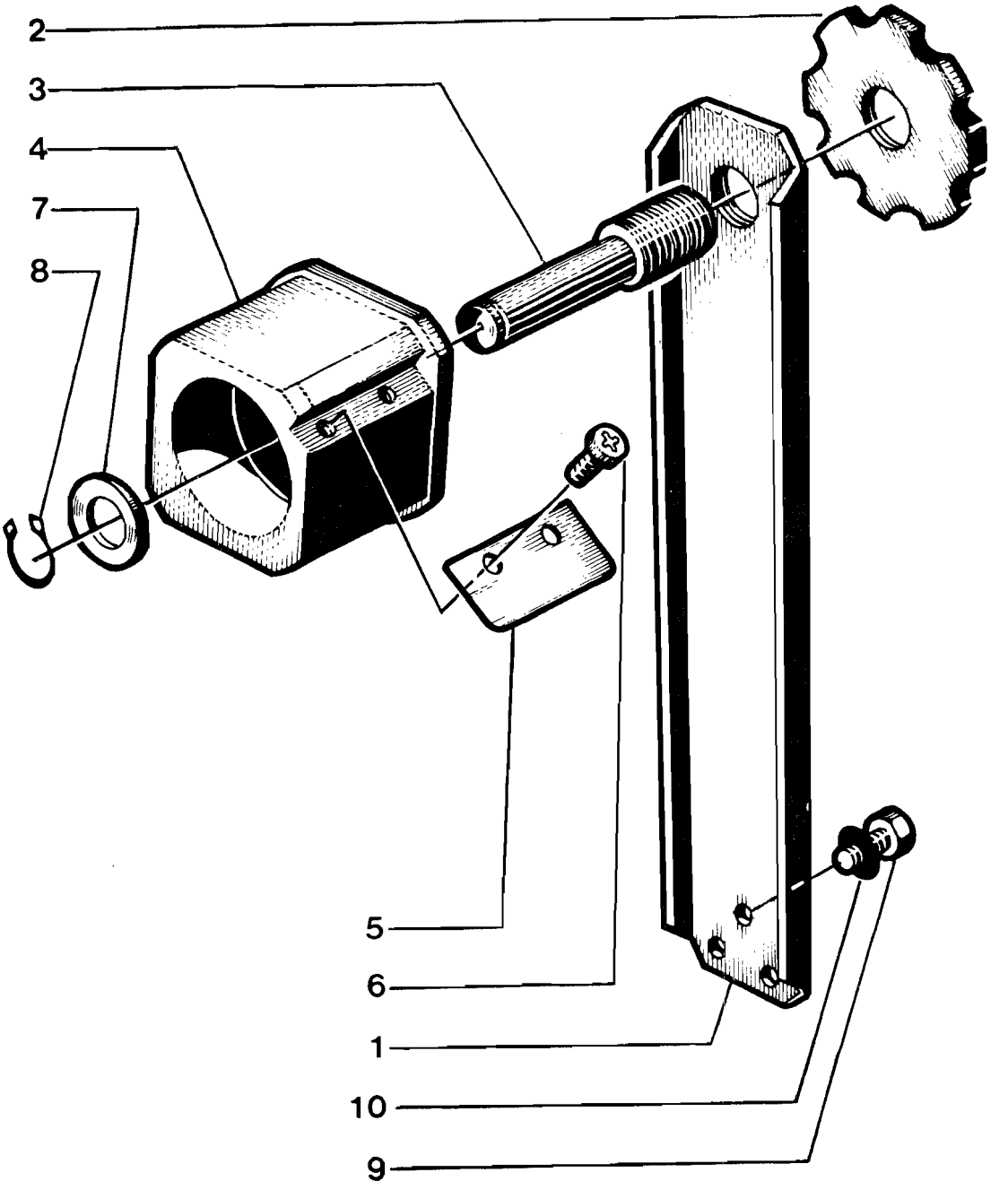

FIGURE 1149

Figure 1149

Ref. No.	3M Part No.	Description
1149-1	78-8052-6544-0	Bracket - Tape Drum
1149-2	78-8017-9091-2	Plate - Locking, Tape Drum Shaft
1149-3	78-8052-6603-4	Shaft - Tape Drum
1149-4	78-8052-6749-5	Drum - Tape
1149-5	78-8052-6268-6	Leaf - Spring
1149-6	26-1002-5753-9	Screw - Self Tapping 7SP x 8
1149-7	78-8052-6541-6	Washer - Special
1149-8	26-1002-6110-1	Ring - Retaining No. 14
1149-9	26-1002-5829-7	Screw - Hex Hd M6 x 10
1149-10	26-1000-0010-3	Washer - Flat M6

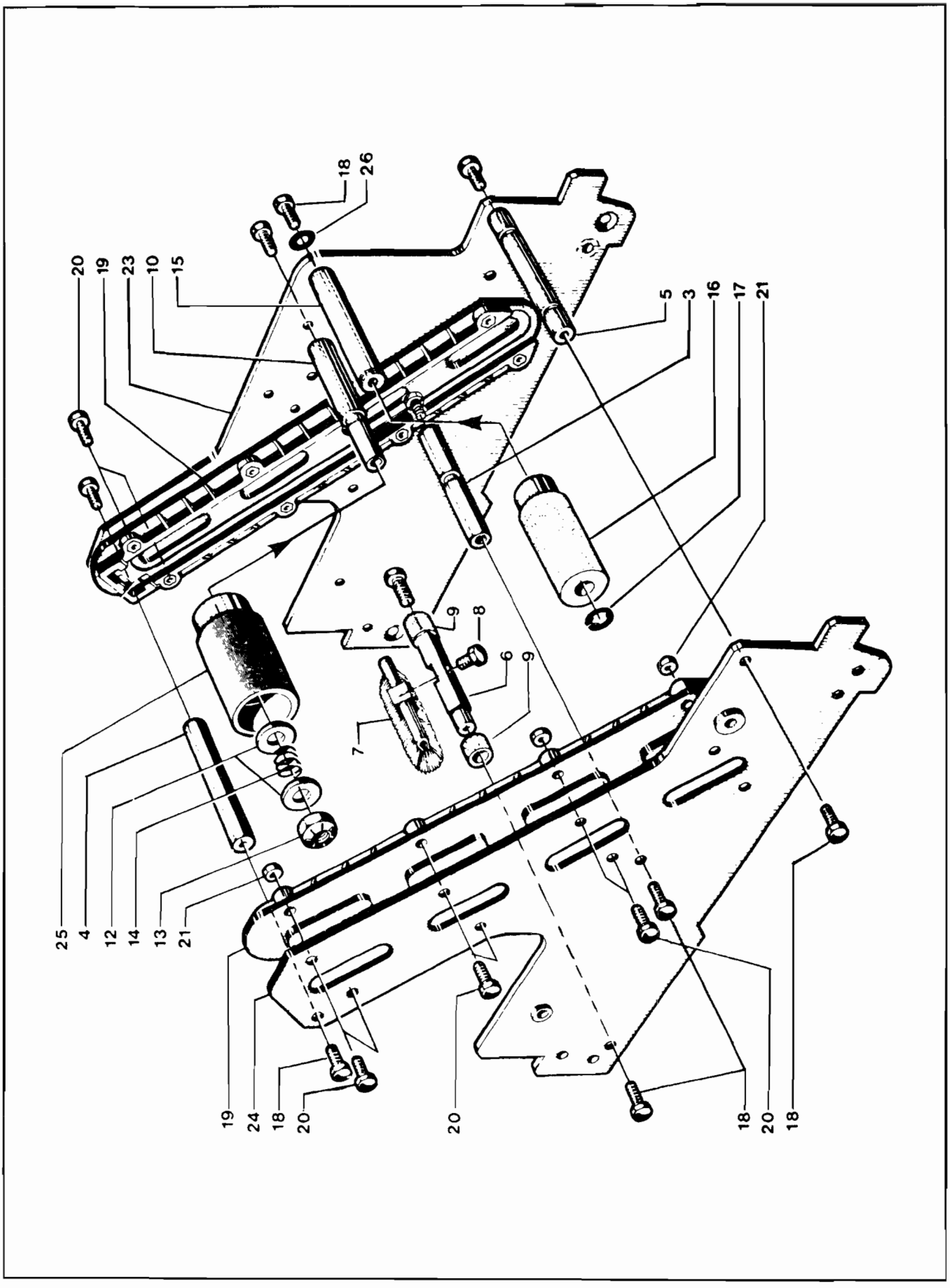

FIGURE 1197 BOTTOM

Figure 1197

Ref. No.	3M Part No.	Description
1197-3	78-8052-6558-0	Spacer - Spring Hook
1197-4	78-8052-6559-8	Spacer - Upper
1197-5	78-8052-6560-6	Spacer - Front
1197-6	78-8052-6561-4	Spacer - Brush Holder
1197-7	78-8052-6562-2	Buffing Brush Assy.
1197-8	78-8018-7798-2	Screw - Hex Hd M5 x 14 Zinc Pl.
1197-9	78-8052-6563-0	Bumper
1197-10	78-8052-6564-8	Shaft - Tension Roller
1197-12	78-8052-6566-3	Washer - Friction
1197-13	78-8017-9077-1	Nut - Hex
1197-14	78-8052-6567-1	Spring - Compression
1197-15	78-8052-6568-9	Shaft - Wrap Roller
1197-16	78-8052-6569-7	Roller Wrap
1197-17	26-1000-1613-3	Ring - Retaining
1197-18	26-1003-5828-7	Screw - Hex Hd M-6 x 10 Zinc Pl.
1197-19	78-8052-6570-5	Guide
1197-20	83-0002-7336-3	Screw - Hex Hd M4 x 14 Zinc. Pl.
1197-21	78-8010-7416-8	Nut - Hex M4 Zinc Pl.
1197-23	78-8052-6604-2	Frame - L/H Bottom
1197-24	78-8052-6605-9	Frame - R/H Bottom
1197-25	78-8052-6606-7	Roller - Tension Bottom
1197-26	26-1000-0010-3	Washer - Flat M6

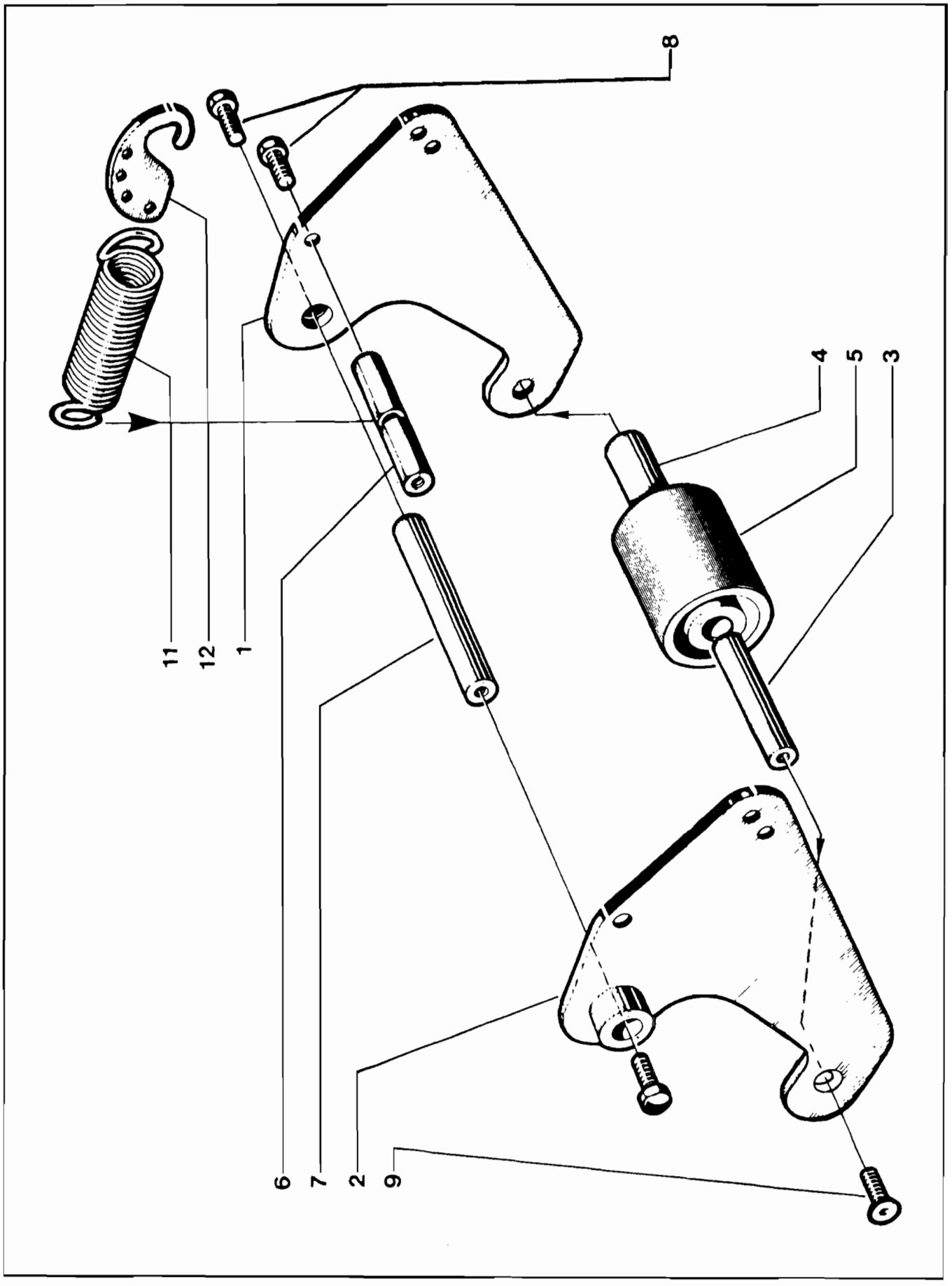

FIGURE 1198 BOTTOM

Figure 1198

Ref. No.	3M Part No.	Description
1198-1	78-8052-6583-8	Frame - R/H
1198-2	78-8052-6584-6	Frame - L/H
1198-3	78-8052-6585-3	Shaft - Buffing Roller
1198-4	78-8052-6586-1	Bushing - Buffing Roller
1198-5	78-8017-9140-7	Roller - Buffing
1198-6	78-8052-6587-9	Spacer - Spring
1198-7	78-8017-9109-2	Shaft - Buffing Assy.
1198-8	26-1002-5830-5	Screw - Hex Hd M6 x 10
1198-9	26-1005-4759-0	Screw - Flat Hd M6 x 12
1198-11	78-8054-8550-1	Spring - Bottom Ext.
1198-12	78-8052-6590-3	Holder - Spring

1. Refer to **Frame Assemblies figure** to find all parts illustrations identified by **figure numbers.**

2. Refer to the figure or figures to determine the **individual parts** required and the parts **reference number.**

3. The **replacement parts list,** that follows each illustration, includes the **part number** and **part description** for the parts in the illustration.

> **Note** - The complete description has been included for standard **fasteners** and some **commercially available components.** This has been done to allow obtaining these standard parts locally, should the customer elect to do so.

4. Refer to page 24 - **"Replacement Parts and Service Information"** of this manual for replacement parts ordering information.

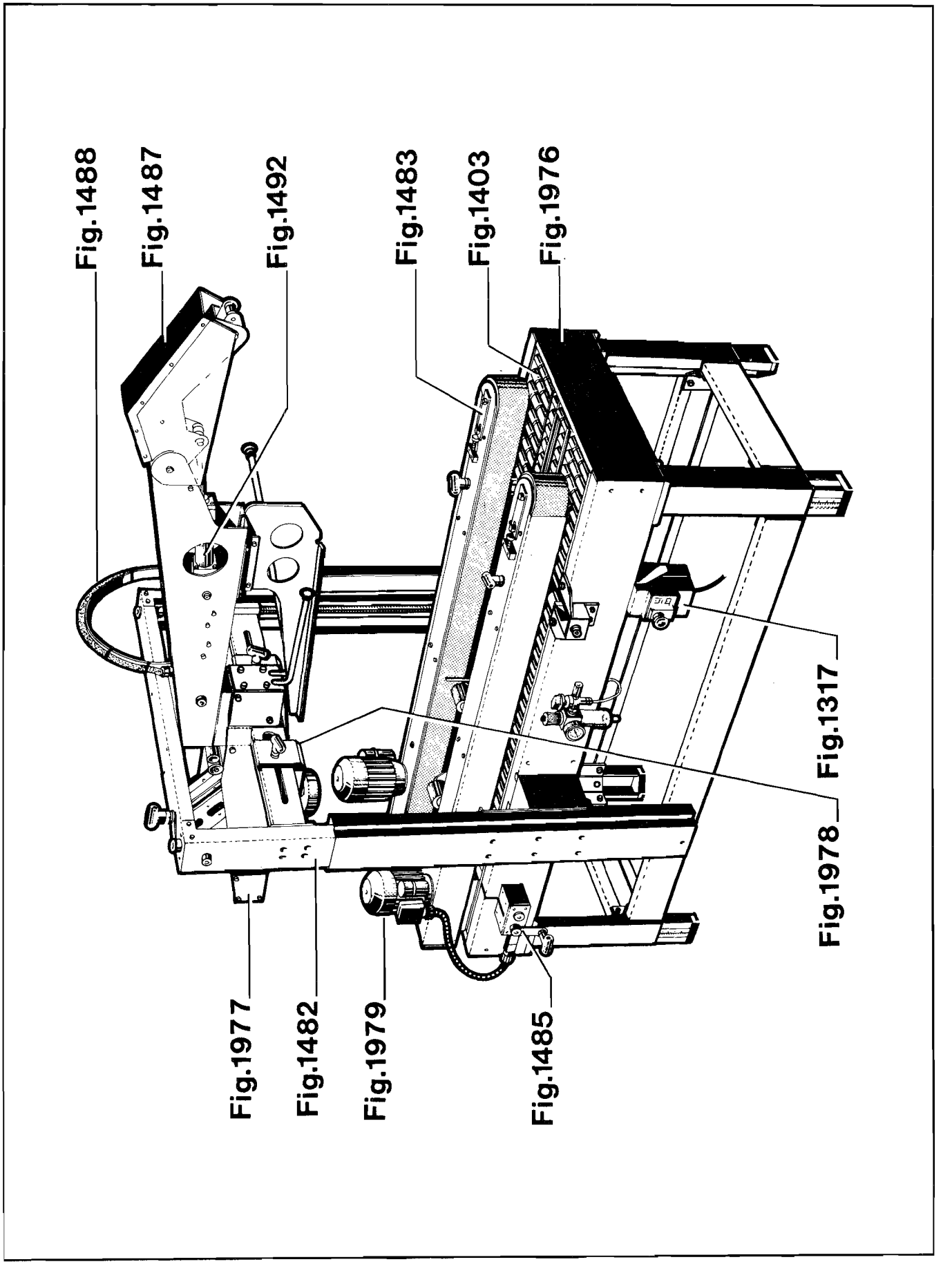

FRAME ASSEMBLIES

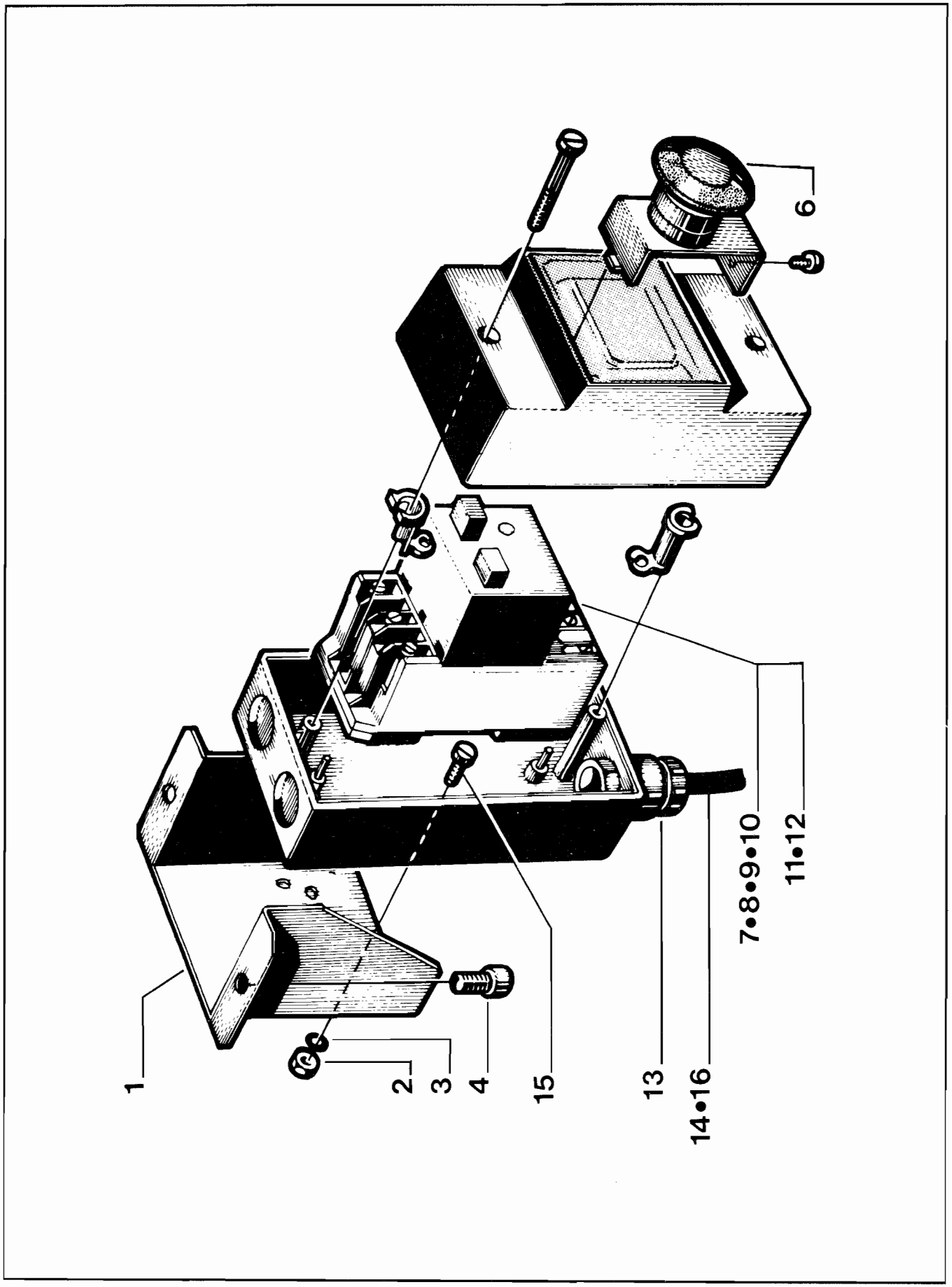

FIGURE 1317

Figure 1317

Ref. No.	3M Part No.	Description
1317-1	78-8052-6724-8	Bracket - Switch
1317-2	78-8010-7416-8	Nut - Metric Hex Steel M4
1317-3	78-8017-9018-5	Washer - Metric, Plain, M4 Spec.
1317-4	26-1003-7963-0	Screw - Soc. Hd. M8 x 16
1317-6	78-8052-6725-5	Stop - Emergency
1317-7	78-8052-6726-3	Switch - On/Off 0.63 - 1 AMP
1317-8	78-8052-6727-1	Switch - On/Off 1 - 1.6 AMP
1317-9	78-8052-6728-9	Switch - On/Off 1.6 - 2.5 AMP
1317-10	78-8052-6729-7	Switch On/Off 2.5 - 4 AMP
1317-11	78-8052-6660-4	Switch - On/Off 4 - 6.3 AMP
1317-12	78-8052-6661-2	Switch - On/Off 6.3 - 10 AMP
1317-13	78-8057-5807-1	Cord Grip
1317-14	78-8028-7909-4	Power Cord U.S.A.
1317-15	78-8017-9257-9	Screw - Phil.Hd. M4 x 10
1317-16	78-8055-0708-0	Power Cord European

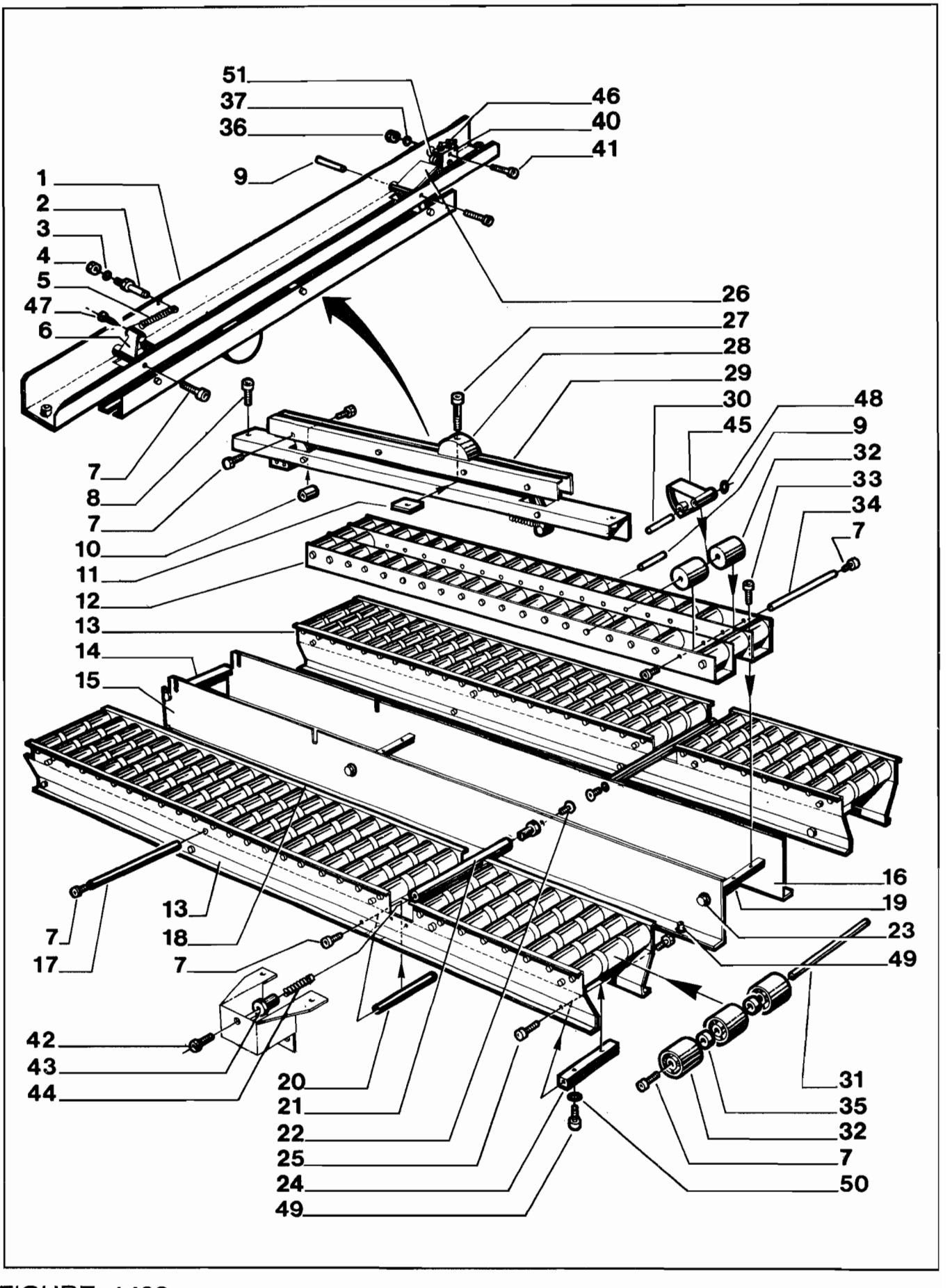
51
37
36
46
40
41
9
1
2
3
4
5
47
6
26
27
28
29
30
48
45
9
32
33
34
7
7
8
7
10
11
12
13
14
15
16
19
23
49
13
18
7
7
17
42
43
44
20
21
22
25
24
49
31
35
32
7
50

FIGURE 1403

Figure 1403

Ref. No.	3M Part No.	Description
1403-1	78-8054-8856-2	Valve - Support
1403-2	78-8054-8757-2	Pin - Spring Holder
1403-3	78-8005-5741-1	Washer - Metric, Plain M5
1403-4	26-1003-6914-4	Nut - Plastic Insert M4
1403-5	78-8017-9136-5	Spring - Cutter
1403-6	78-8055-0746-0	Front Actuator Link
1403-7	78-8010-7163-6	Screw - Metric, Hex. Hd. M5 x 10
1403-8	78-8010-7211-3	Screw, Soc. Hd. M6 x 25
1403-9	78-8054-8857-0	Shaft - 8 x 44 mm
1403-10	78-8054-8858-8	Spacer - 8 x 26, 5 mm
1403-11	78-8054-8859-6	Clamp - Cam
1403-12	78-8054-8860-4	Roller Bed - Center
1403-13	78-8054-8861-2	Roller Bed - Left
1403-14	78-8054-8862-0	Spacer - 12 x 12 x 140 mm
1403-15	78-8054-8863-8	Center Frame - Left
1403-16	78-8054-8864-6	Center Frame - Right
1403-17	78-8054-8865-3	Shaft - 8 x 139 mm
1403-18	78-8054-8866-1	Roller Bed - Right
1403-19	78-8054-8867-9	Spacer - Valve Holder
1403-20	78-8054-8868-7	Spacer - 8 x 95 mm
1403-21	78-8054-8831-5	Shaft - 14 x 255 mm
1403-22	78-8057-5716-4	Screw - Fl. Hd. Soc. M8 x 15
1403-23	78-8010-7169-3	Screw - Metric, Hex Hd. M6 x 12
1403-24	78-8054-8870-3	Spacer - 15 x 15 x 95 mm
1403-25	78-8010-7209-7	Screw, Soc. Hd. M6 x 12
1403-26	78-8055-0747-8	Link - Rear Actuator
1403-27	78-8010-7165-1	Screw - Fl. Hd. Soc. M5 x 25
1403-28	78-8054-8871-1	Cam
1403-29	78-8054-8872-9	Guide - Cam
1403-30	78-8054-8873-7	Shaft - 6 x 60 mm
1403-31	78-8054-8874-5	Shaft - 8 x 148 mm
1403-32	78-8052-6693-5	Roller
1403-33	26-1003-7949-9	Screw - Soc. Hd. Hex Soc. M5 x 12
1403-34	78-8054-8875-2	Shaft - 8 x 125 mm
1403-35	78-8055-0734-6	Spacer
1403-36	26-1003-6914-4	Nut - Plastic Insert M4
1403-37	78-8005-5740-3	Washer - Plain Metric 4 mm Nick.
1403-40	26-1005-6358-9	Valve - 3 Way - 2 Position
1403-41	26-1003-7947-3	Screw - Soc. Hd. Hex Soc. M4 x 35
1403-42	26-1003-7963-0	Screw - Soc. Hd. M8 x 16
1403-43	78-8054-8998-2	Bushing
1403-44	78-8054-8999-0	Spring
1403-45	78-8055-0748-6	Link - P.I.C. Actuator
1403-46	78-8057-5732-1	Fitting, Elbow MR15-04-05
1403-47	26-1002-4955-1	Screw - Self Tap Thd., 12 mm
1403-48	78-8017-9318-9	Washer - Plain - Metric 8 mm
1403-49	26-1003-7957-2	Screw Soc. Hd. Hex Hd. M6 X 16
1403-50	26-1000-0010-3	Washer - Flat M6
1403-51	78-8054-8758-0	Spacer - Valve Holder

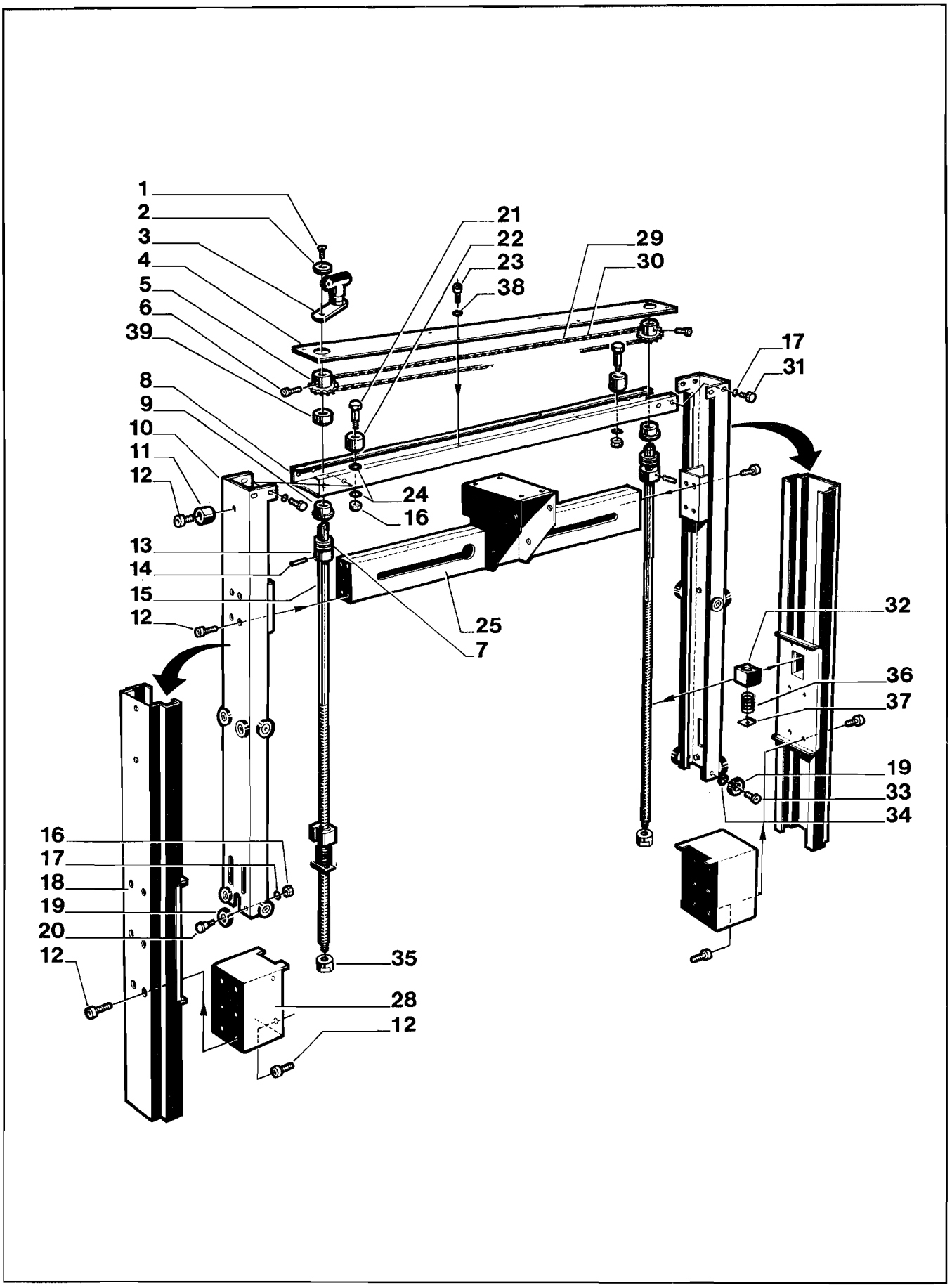
1
2
3
4
5
6
39
8
9
10
11
12
13
14
15
12
16
17
18
19
20
12
21
22
23
38
29
30
24
16
25
7
17
31
32
36
37
19
33
34
35
28
12

FIGURE 1482

Figure 1482

Ref. No.	3M Part No.	Description
1482-1	26-1001-9843-6	Screw - Fl. Soc. Hd. M6 x 16
1482-2	78-8054-8577-4	Washer - Special
1482-3	78-8054-8578-2	Crank
1482-4	78-8054-8960-2	Cover - Chain
1482-5	78-8054-8580-8	Sprocket
1482-6	26-1003-7946-5	Screw - Soc. Hd. M4 x 25
1482-7	78-8054-8584-0	Spacer
1482-8	78-8054-8961-0	Crossmember
1482-9	78-8054-8583-2	Bushing
1482-10	78-8054-8962-8	Column - Inner
1482-11	78-8054-8587-3	Stop
1482-12	26-1003-7964-8	Screw - Soc. Hd. Hex Soc. Dr., M8 x 20
1482-13	78-8054-8585-7	Collar
1482-14	78-8054-8586-5	Pin
1482-15	78-8054-8573-3	Lead Screw
1482-16	26-1003-6916-9	Nut - Locking Plastic Insert M6
1482-17	26-1000-0010-3	Washer - Flat M6
1482-18	78-8054-8994-1	Column - Outer
1482-19	78-8054-8617-8	Bearing - Special
1482-20	78-8017-9106-8	Screw - Bearing Shoulder
1482-21	78-8054-8574-1	Screw - Idler
1482-22	78-8054-8575-8	Roller - Idler
1482-23	26-1002-5753-9	Screw - Self Tapping
1482-24	78-8042-2919-9	Washer - M6 Nick. Pl.
1482-25	78-8054-8963-6	Support - Head
1482-28	78-8054-8964-4	Bracket - Column
1482-29	78-8054-8965-1	Chain - 3/8 " Pitch, 183 Pitch Long
1482-30	78-8046-8269-4	Connecting - Link - 3/8 " Pitch Chain
1482-31	78-8032-0375-7	Screw - Hex Hd. M6 x 16
1482-32	78-8054-8571-7	Nut - Plastic
1482-33	78-8054-8589-9	Screw - Special
1482-34	78-8054-8576-6	Spacer
1482-35	78-8054-8968-5	Nut - Special
1482-36	78-8054-8997-4	Spring
1482-37	78-8054-8970-1	Bed Plate for Spring
1482-38	78-8005-5740-3	Washer - Plain - Metric 4 mm Nick.
1482-39	78-8054-8581-6	Spacer

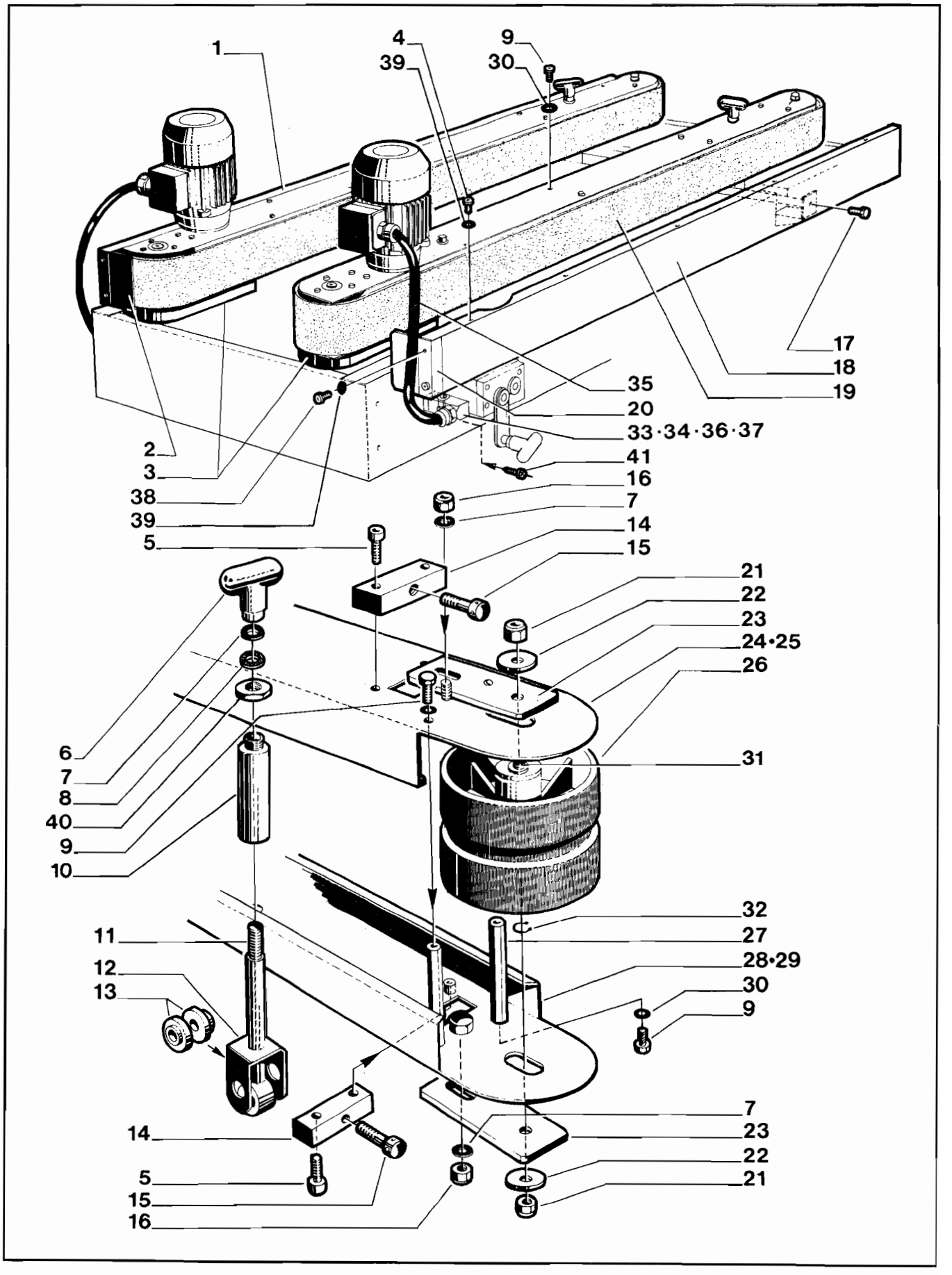
1
4
39
9
30
17
18
19
35
20
33·34·36·37
41
2
3
38
39
16
7
14
5
15
21
22
23
24•25
26
6
7
8
40
9
10
31
32
11
27
12
28•29
13
30
9
7
14
23
22
5
21
15
16

FIGURE 1483

Figure 1483

Ref. No.	3M Part No.	Description
1483-1	78-8054-8896-8	Cover - Right
1483-2	78-8054-8897-6	Guard - Belt
1483-3	78-8054-8898-4	Cover - Chain Box
1483-4	26-1002-5753-9	Screw - Self Tapping
1483-5	78-8010-7210-5	Screw - Soc. Hd. Hex. Soc. M6 x 20
1483-6	78-8052-6684-4	Knob
1483-7	78-8052-6566-3	Washer - Friction
1483-8	78-8017-9074-8	Washer - Nylon 15 mm
1483-9	78-8010-7209-7	Screw - Soc. Hd. M6 x 12
1483-10	78-8054-8899-2	Spacer
1483-11	78-8054-8900-8	Screw - Special
1483-12	78-8054-8901-6	Bracket - Guide
1483-13	78-8054-8902-4	Bushing - Flanged
1483-14	78-8054-8903-2	Block - Belt
1483-15	78-8054-8904-0	Screw - Belt Adjustment
1483-16	26-1003-6918-5	Nut - Plastic Insert M10 Hex Flange
1483-17	26-1003-7963-0	Screw - Soc. Hd. M8 x 16
1483-18	78-8054-8905-7	Cover - Left
1483-19	78-8054-8841-4	Belt - Drive 12AF
1483-20	78-8054-8906-5	Belt - Guard
1483-21	78-8017-9313-0	Nut - Self Locking M8 Nick. Pl.
1483-22	78-8017-9318-9	Washer - Plain Metric 8 mm
1483-23	78-8054-8907-3	Plate - Belt Adjustment
1483-24	78-8054-8908-1	Guide Plate - Up Right
1483-25	78-8054-8909-9	Guide Plate - Up Left
1483-26	78-8052-6710-7	Roller - Idler
1483-27	78-8054-8910-7	Spacer - Exagonal
1483-28	78-8054-8911-5	Guide Plate - Low Right
1483-29	78-8054-8912-3	Guide Plate - Low Left
1483-30	26-1000-0010-3	Washer - Flat M6
1483-31	78-8054-8913-1	Shaft - Roller
1483-32	12-7997-0272-0	E-Ring - M25
1483-33	78-8057-5836-0	Cover Plug
1483-34	78-8057-5837-8	Plug Female
1483-35	78-8055-0621-5	Sleeving
1483-36	78-8057-5838-6	Plug Housing 90°
1483-37	78-8057-5839-4	Plug Male 90°
1483-38	26-1002-4955-1	Screw - Self Tap Thd., 12 mm
1483-39	78-8005-5740-3	Washer - Plain - Metric 4 mm Nick.
1483-40	78-8017-9096-1	Nut - Special M18 X 1
1483-41	78-8028-8208-0	Screw - 6P X 9.5

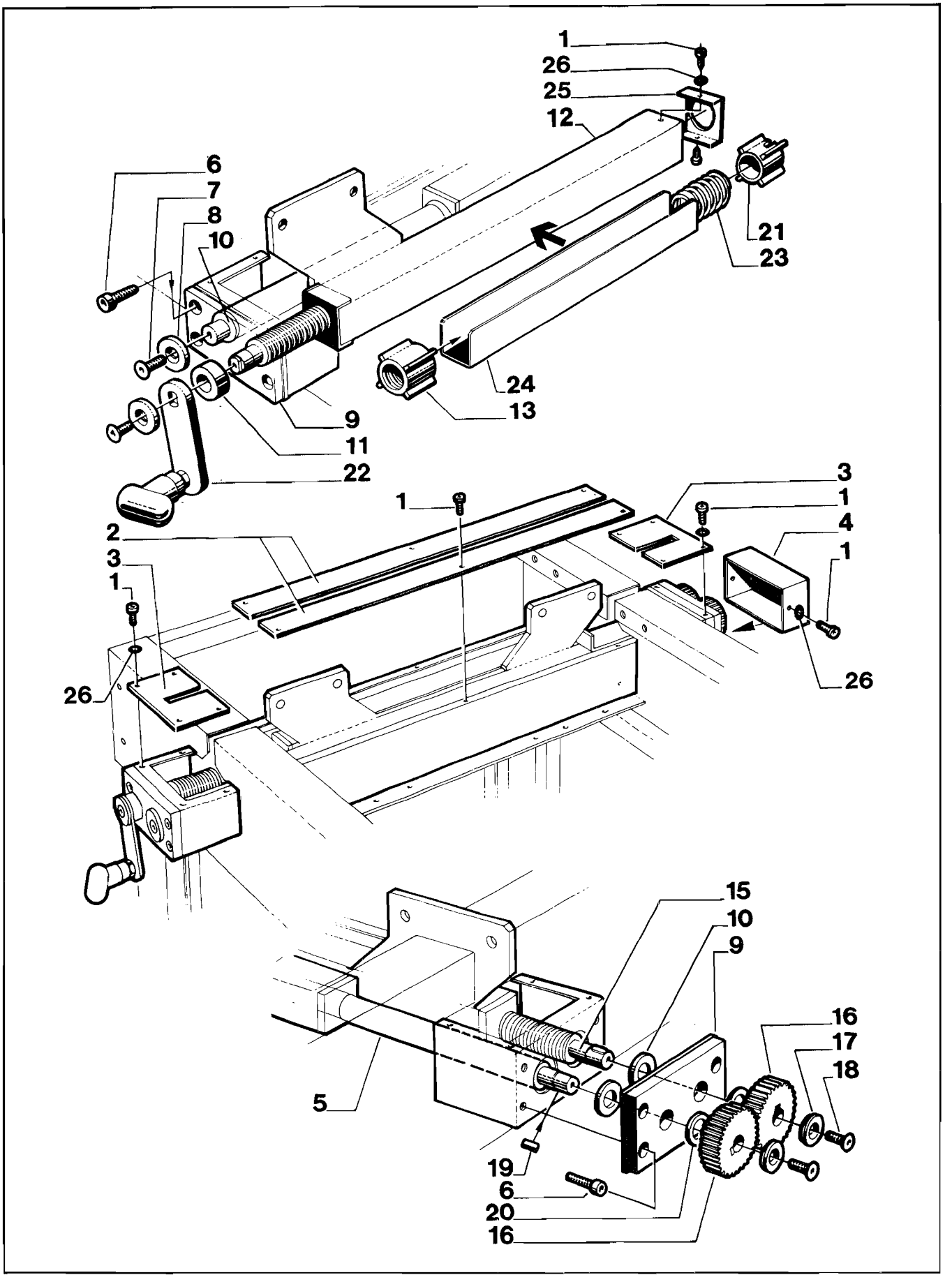
1
26
25
12
6
7
8
10
21
23
24
13
9
11
22
3
1
4
1
2
3
1
26
26
15
10
9
16
17
18
5
19
6
20
16

FIGURE 1485

Figure 1485

Ref. No.	3M Part No.	Description
1485-1	26-1002-5753-9	Screw - Self Tapping
1485-2	78-8054-8914-9	Rear Guide Guard
1485-3	78-8054-8915-6	Screw - Adjustment Guard
1485-4	78-8054-8916-4	Guard - Gear
1485-5	78-8054-8917-2	Conductor Screw
1485-6	26-1003-7951-5	Screw - Soc. Hd. Hex. Soc. M5 x 20
1485-7	78-8057-5726-3	Screw - Fl. Hd. Soc. Hd. M6 x 15
1485-8	78-8054-8577-4	Washer - Special
1485-9	78-8054-8918-0	Plate for Screws
1485-10	78-8054-8919-8	Washer - 15 x 25 x 5 mm
1485-11	78-8054-8920-6	Spacer - 15.5 x 30 x 10 mm
1485-12	78-8054-8921-4	Support - Side Guide
1485-13	78-8054-8922-2	Nut - Plastic
1485-15	78-8054-8923-0	Screw - Side Guide
1485-16	78-8054-8924-8	Gear - 28 Teeth, 1.5 mm Pitch
1485-17	78-8054-8877-8	Washer - 5.5 x 20 x 4
1485-18	78-8057-5727-1	Screw - Flat Hd. Soc M5 x 15
1485-19	78-8028-8244-5	Key - 4 x 4 x 10 mm
1485-20	78-8054-8925-5	Washer - 12 x 25 x 3 mm
1485-21	78-8054-8926-3	Collar
1485-22	78-8054-8578-2	Crank
1485-23	78-8055-0623-1	Spring
1485-24	78-8055-0624-9	Spacer
1485-25	78-8055-0625-6	End Cap
1485-26	78-8005-5740-3	Washer - Plain - Metric 4 mm Nick.

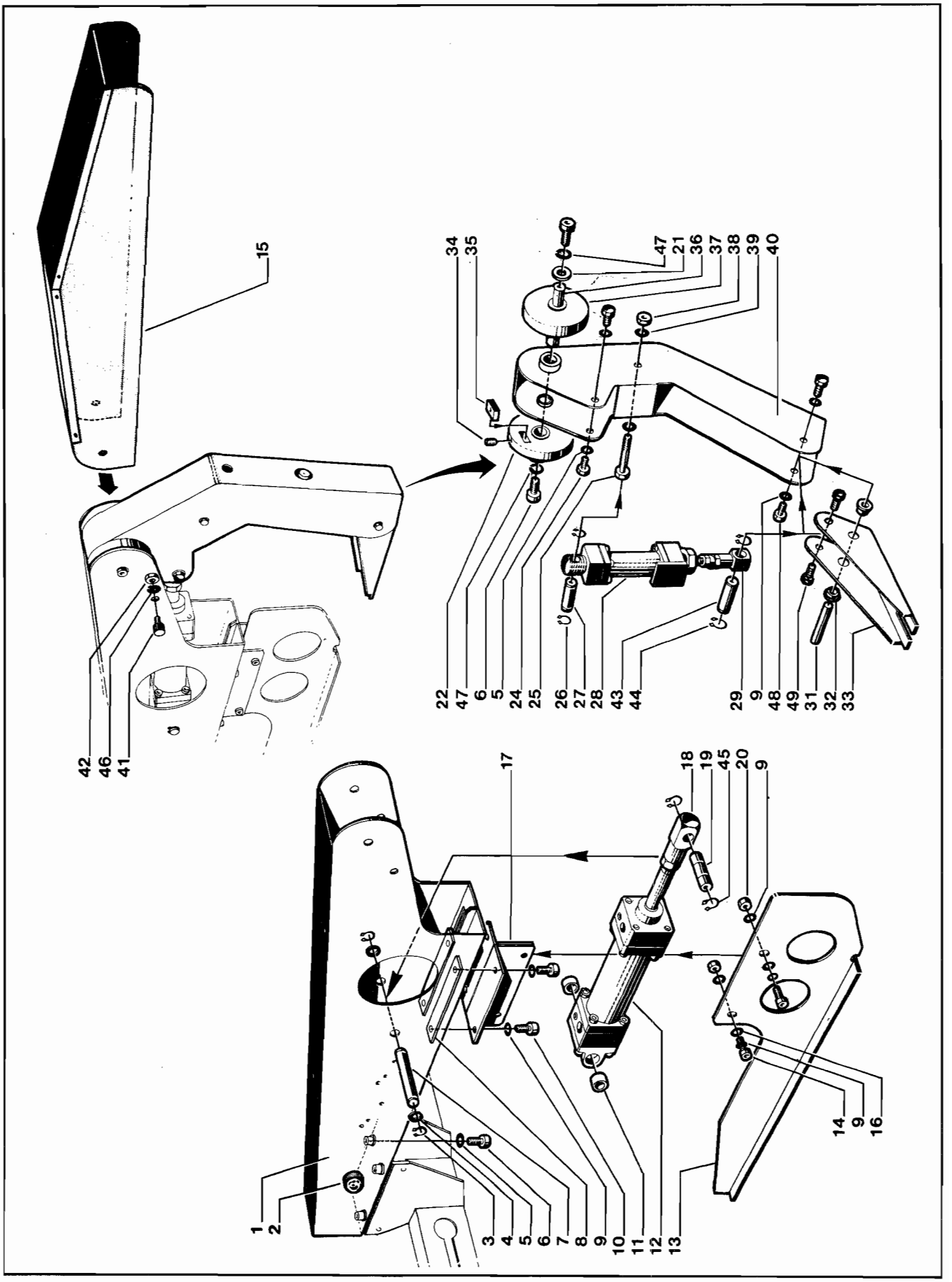
15
34
35
47
21
36
37
38
39
40
22
47
6
5
24
25
26
27
28
43
44
29
9
48
49
31
32
33
42
46
41
17
18
19
45
20
9
1
2
3
4
5
6
7
8
9
10
11
12
13
14
9
16

FIGURE 1487

Figure 1487

Ref. No.	3M Part No.	Description
1487-1	78-8054-8936-2	Support - Side Flap Folder
1487-2	26-1005-6907-3	Indicator - Air
1487-3	78-8656-3965-8	E-Ring M8
1487-4	78-8017-9059-9	Washer - Flat for M12 Screw
1487-5	78-8017-9318-9	Washer - Plain Metric 8 mm
1487-6	26-1003-7964-8	Screw - Soc. Hd. Hex. Soc. M8 x 20
1487-7	78-8054-8937-0	Shaft - 12 x 100 mm
1487-8	78-8054-8938-8	Bracket
1487-9	26-1000-0010-3	Washer - Flat M6
1487-10	78-8010-7209-7	Screw - Soc. Hd. M6 x 12
1487-11	78-8054-8939-6	Spacer - 12.5 x 20 x 13.5 mm
1487-12	78-8057-5738-8	Cylinder - SIRI Air 40 x 100 mm
1487-13	78-8054-8940-4	Separator - Bracket
1487-14	78-8010-7210-5	Screw - Soc. Hd. Hex. Soc. M6 x 20
1487-15	78-8054-8941-2	Guard - Side Flap Folder
1487-16	78-8054-8942-0	Washer
1487-17	78-8054-8943-8	Bracket - Flap Folder
1487-18	78-8057-5747-9	Mount - Cylinder Rod End
1487-19	78-8054-8944-6	Shaft - 12 x 51 mm
1487-20	26-1003-6916-9	Nut - Locking Plastic Insert M6
1487-21	26-1004-5507-5	Washer - M8
1487-22	78-8054-8945-3	Cam
1487-24	26-1003-5841-0	Screw - M8 x 16
1487-25	78-8057-5895-6	Screw - Soc. Hd. M5 x 60
1487-26	78-8052-6732-1	Ring - Special M8
1487-27	78-8054-8946-1	Shaft - 5/8 x 51 mm
1487-28	78-8057-5729-7	Cylinder - Air 25 mm x 60 mm
1487-29	78-8057-5748-7	Mount - Cylinder Rod End
1487-31	78-8054-8954-5	Spacer - 10 X 51 mm
1487-32	78-8054-8780-4	Bushing - 10 x 14 mm
1487-33	78-8054-8948-7	Flap - Folder
1487-34	78-8057-5730-5	Screw - Set M5 x 16
1487-35	78-8054-8949-5	Clamp - Cam
1487-36	78-8054-8950-3	Shaft - 12 x 81 mm
1487-37	78-8054-8951-1	Roller Spacer
1487-38	26-1005-6859-6	Nut - Self Locking M5
1487-39	78-8005-5741-1	Washer - Metric Plain M5
1487-40	78-8054-8952-9	Arm - Flap Folder
1487-41	78-8054-8953-7	Guard - Stop
1487-42	78-8010-7417-6	Nut - Metric Hex. Stl. M5
1487-43	78-8060-7764-6	Spacer - 10 x 39 mm
1487-44	78-8052-6733-9	Ring - Special M10
1487-45	78-8656-3972-4	E-Ring M12
1487-46	78-8005-5735-3	Washer - Metric, Lock, M5
1487-47	78-8005-5736-1	Lockwasher For M8 Screw
1487-48	78-8010-7169-3	Screw - Metric, M6 X 12, Hex. Hd.
1487-49	78-8060-7852-9	Screw - Hex. Hd. M6 X 10 Special
1487-50	78-8017-9319-7	Washer, Flat M10

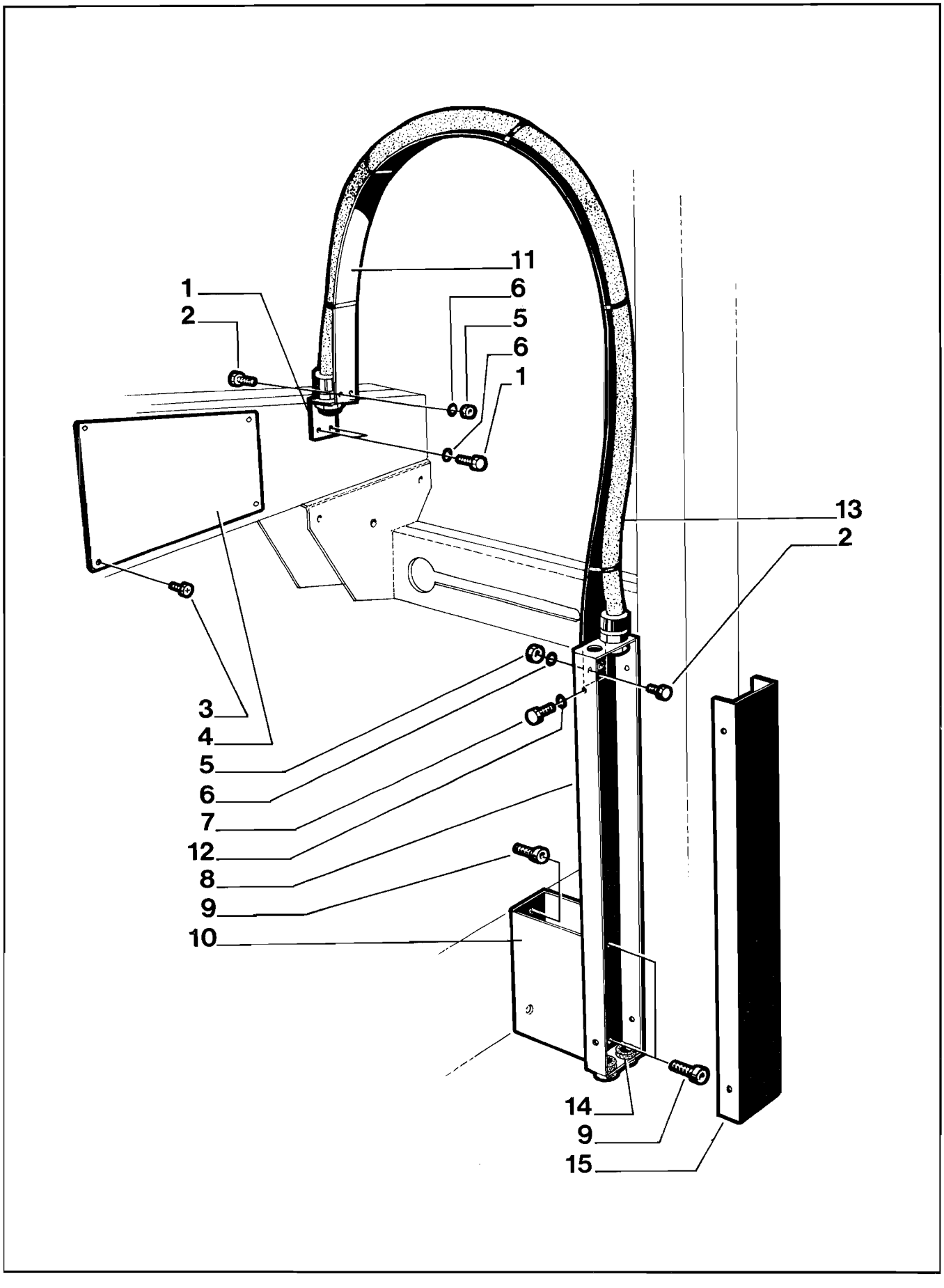

FIGURE 1488

Figure 1488

Ref. No.	3M Part No.	Description
1488-1	78-8054-8955-2	Clamp - Bracket
1488-2	78-8010-7163-6	Screw - Metric Hex. Hd.M5 x 10
1488-3	26-1002-5753-9	Screw - Self Tapping
1488-4	78-8054-8956-0	Cover - Upper Housing
1488-5	78-8010-7417-6	Nut - Metric Hex Stl. M5
1488-6	78-8005-5741-1	Washer - Metric Plain M5
1488-7	26-1003-5810-5	Screw - Hex. Hd. M4 x 8
1488-8	78-8052-6657-0	Housing - Wire
1488-9	26-1003-7963-0	Screw - Soc. Hd. M8 x 16
1488-10	78-8054-8957-8	Bracket - Conveyor
1488-11	78-8054-8958-6	Strap - Wire
1488-12	78-8005-5740-3	Washer - Plain Metric 4 mm Nick.
1488-13	78-8054-8959-4	Sleeving - Wire
1488-14	78-8052-6659-6	Grommet
1488-15	78-8052-6658-8	Cover

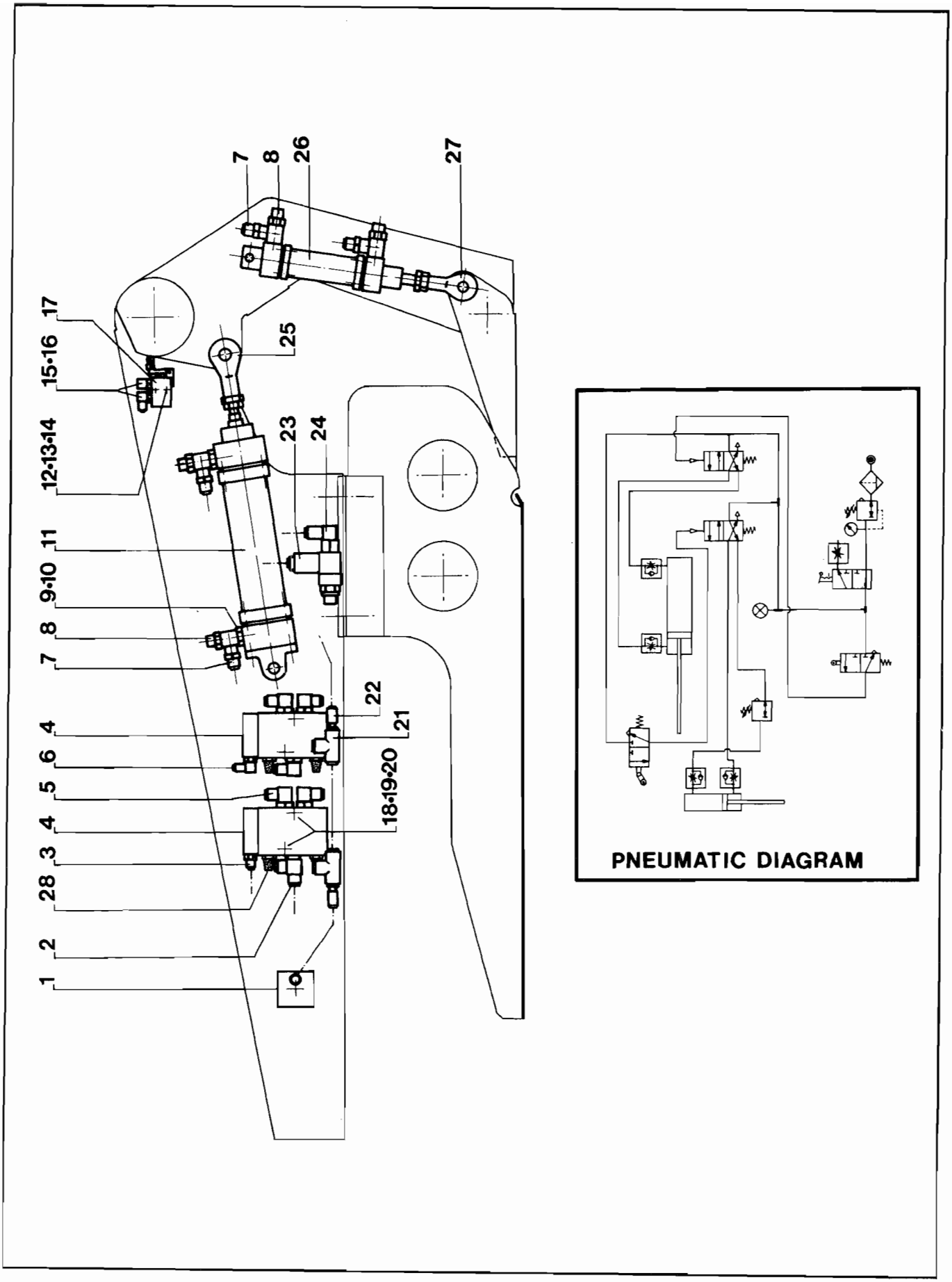
7
8
26
27
17
15•16
25
12•13•14
23
24
11
9•10
8
7
22
4
21
6
5
18•19•20
4
3
28
2
1
PNEUMATIC DIAGRAM

FIGURE 1492

Figure 1492

Ref. No.	3M Part No.	Description
1492-1	26-1005-6907-3	Air Indicator
1492-2	26-1005-6884-4	Swivel - Tee - Lateral
1492-3	78-8060-7853-7	Union Straight MR12-04-18
1492-4	26-1005-6911-5	Valve - Single Pilot
1492-5	26-1005-6893-5	90 Degree Elbow
1492-6	26-1005-6881-0	Flow Control 6 mm
1492-7	26-1005-6910-7	Union Straight
1492-8	78-8057-5731-3	Flow Control GRL 1/8 PK4 Fiesto
1492-9	26-1005-6902-4	Reducer - 1/4 - 1/8
1492-10	78-8057-5745-3	Seal, Teflon 0-1/4
1492-11	78-8057-5738-8	Cylinder - SIRI Air 40 x 100 mm
1492-12	26-1002-5812-3	Screw - Hex Hd. M4 x 25 mm
1492-13	26-1003-6914-4	Nut - Plastic Insert M4
1492-14	78-8005-5740-3	Washer - Plain Metric 4 mm Nick.
1492-15	78-8057-5732-1	Fitting - Elbow MR15-04-05 (Megliani)
1492-16	78-8057-5746-1	Washer - Special
1492-17	78-8057-5733-9	Valve - L-3-M5 Fiesto
1402-18	26-1002-5824-8	Screw - Hex. Hd. M5 x 35 mm
1492-19	78-8010-7417-6	Nut - Metric Hex. Stl. M5
1492-20	78-8005-5741-1	Washer - Metric Plain M5
1492-21	78-8057-5734-7	Fitting "T" MP24-00-06 (Megliani)
1492-22	78-8057-5735-4	Fitting Reducer MR25-04-06 (Megliani)
1492-23	78-8057-5749-5	Regulator - Pressure
1492-24	78-8060-7854-5	Union Straight RDF-06-18
1492-25	78-8057-5747-9	Mount - Cyl. Rod End
1492-26	78-8057-5729-7	Cylinder - Air 25 mm x 100 mm
1492-27	78-8057-5748-7	Mount - Cyl. Rod End
1492-28	26-1005-6890-1	Muffler

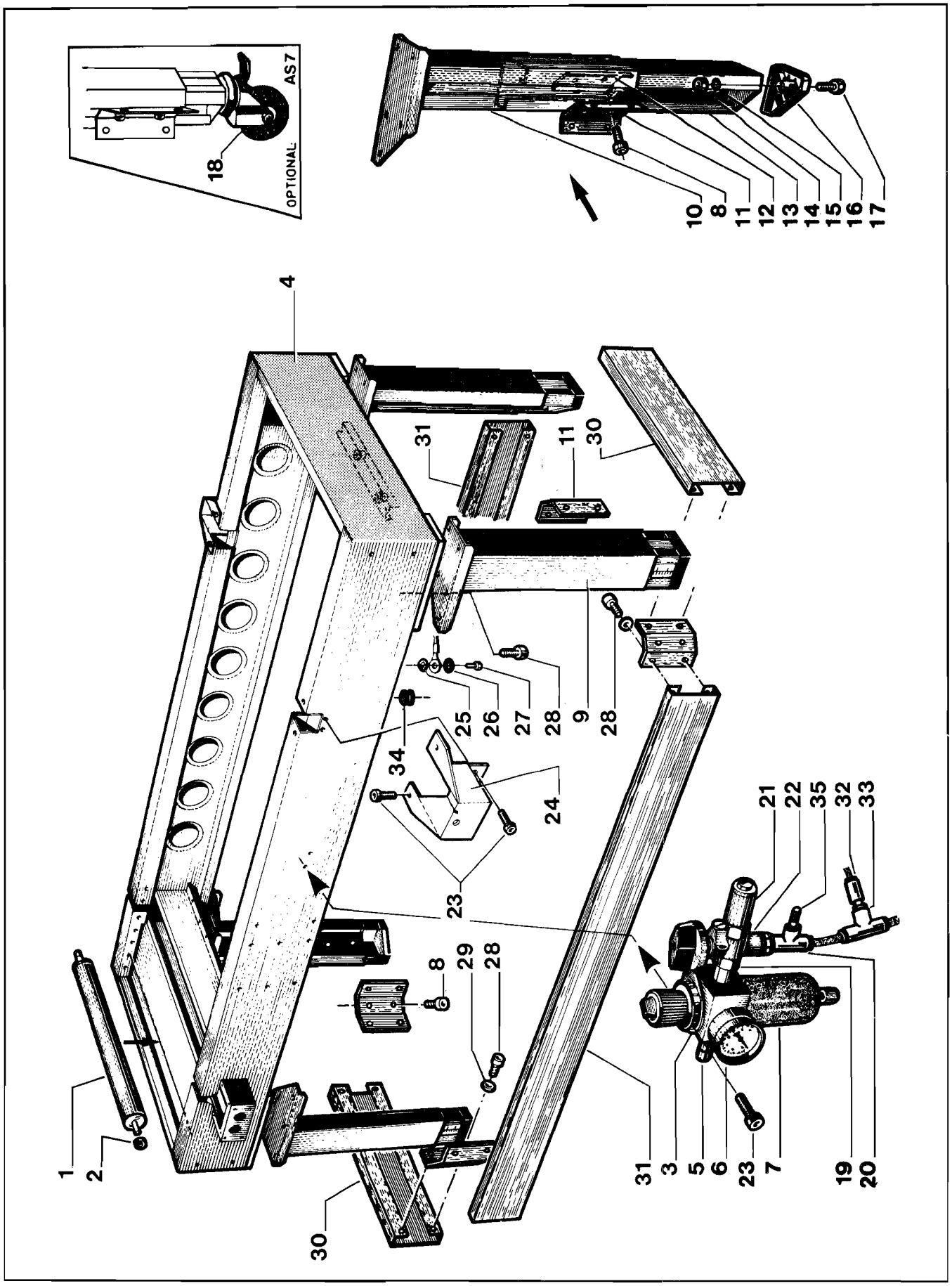
OPTIONAL
AS7
18
10
8
11
12
13
14
15
16
17
4
31
11
30
25
26
27
28
9
28
34
24
23
21
22
35
32
33
8
29
28
1
2
30
31
3
5
6
23
7
19
20

FIGURE 1976

Figure 1976

Ref. No.	3M Part No.	Description
1976-1	78-8052-6669-5	Roller - Conveyor
1976-2	78-8052-6668-7	Snap - Roller
1976-3	78-8054-8837-2	Bracket - Regulator
1976-5	78-8017-9295-9	Hose Connector
1976-6	78-8054-8838-0	Gage - Air
1976-7	26-1005-5899-3	Filter Pressure Regulator
1976-8	26-1003-7963-0	Screw - Soc. Hd. M8 X 16
1976-9	78-8060-7855-2	Leg - Conveyor Left
1976-10	78-8060-7856-0	Leg - Conveyor Right
1976-11	78-8060-7857-8	Bracket - Special
1976-12	78-8052-6677-8	Clamp - Inner
1976-13	78-8052-6678-6	Leg - Inner
1976-14	78-8017-9313-0	Nut Self Locking M8 Nick. Pl.
1976-15	26-1004-5507-5	Washer M8
1976-16	78-8052-6679-4	Pad - Foot
1976-17	26-1003-5842-8	Screw Hex. Hd. M8 X 20
1976-18	78-8054-8818-2	Wheel - Caster
1976-19	26-1005-6898-4	Nipple 1/4" X 1/4"
1976-20	78-8060-7858-6	Union, MP15-06-14
1976-21	78-8057-5725-5	Muffler, Type S4 Festo
1976-22	26-1005-6900-8	Valve On/Off
1976-23	78-8010-7209-7	Screw, Soc. Hd. M6 X 12
1976-24	78-8055-0620-7	Mount - Side Guide
1976-25	78-8046-8217-3	Washer - Special
1976-26	78-8005-5741-1	Washer - Metric Plain, M5
1976-27	26-1003-5820-4	Screw - Hex Hd. M5 X 12
1976-28	26-1003-7964-8	Screw, Soc. Hd. Hex Soc. Dr., M8 X 20
1976-29	78-8017-9318-9	Washer - Metric Plain, 8 mm
1976-30	78-8060-7859-4	Cross Member, Front/Rear
1976-31	78-8060-7860-2	Cross Member, Lengthwise
1976-32	78-8057-5735-4	Fitting, Reducer MR25-04-06
1976-33	78-8057-5734-7	Fitting 'T' MP24-00-06
1976-34	78-8060-7758-8	Fairlead/20
1976-35	78-8060-7861-0	End Cap MR 290006

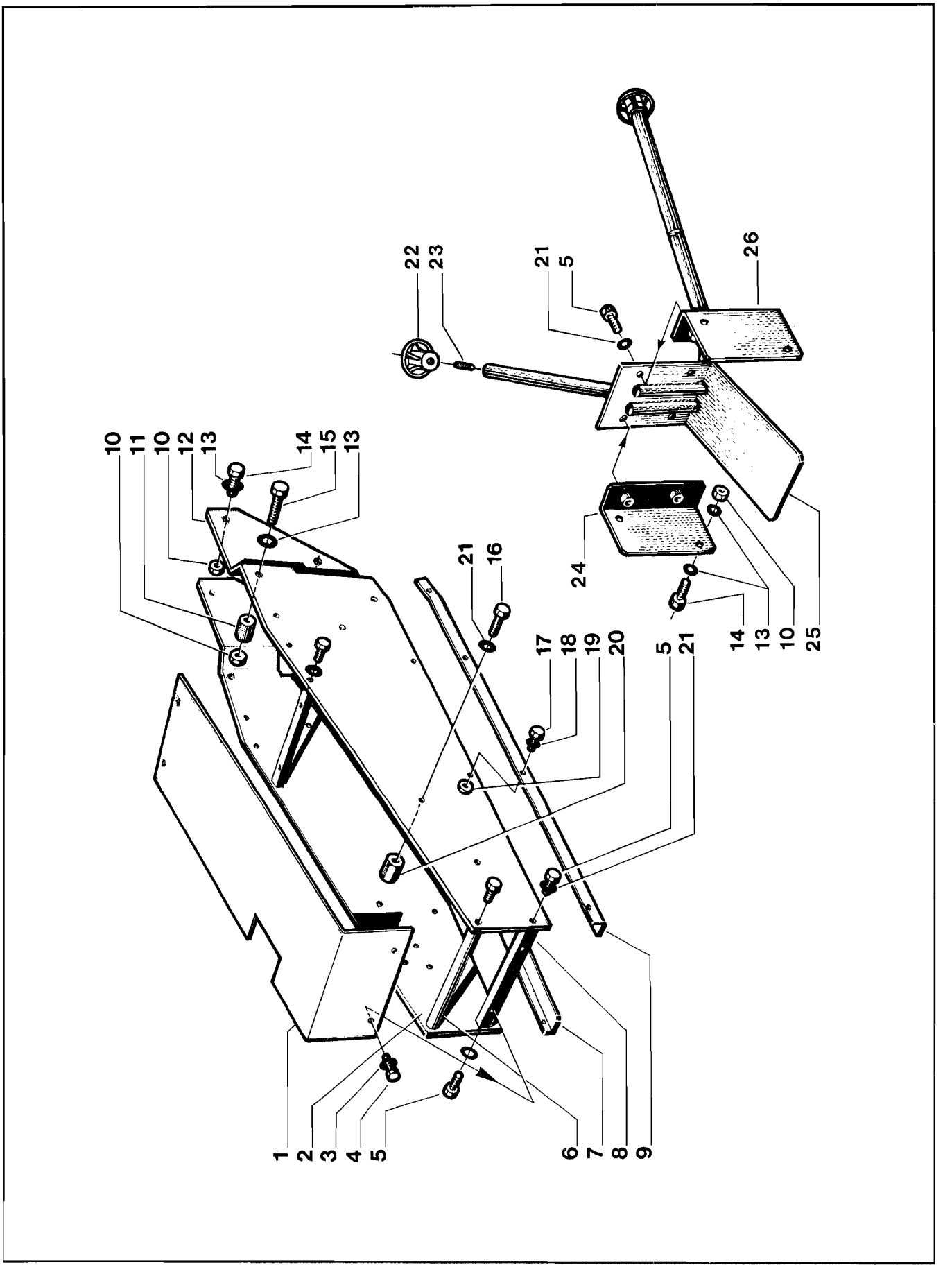
10
11
10
12
13
14
15
13
22
23
21
5
26
21
16
24
17
18
19
20
5
21
14
13
10
25
1
2
3
4
5
6
7
8
9

FIGURE 1977

Figure 1977

Ref. No.	3M Part No.	Description
1977-1	78-8054-8927-1	Cover, Top
1977-2	78-8054-8928-9	Upper Main Frame, Right
1977-3	78-8005-5741-1	Washer - Metric Plain, M5
1977-4	78-8010-7163-6	Screw - Metric, M5 X 10, Hex. Hd.
1977-5	78-8032-0375-7	Screw - Metric, M6 X 16, Hex. Hd.
1977-6	78-8054-8929-7	Spacer - /10X140 mm
1977-7	78-8054-8930-5	Slide - Right
1977-8	78-8054-8931-3	Spacer - 10X10X140 mm
1977-9	78-8054-8932-1	Slide - Left
1977-10	26-1000-1347-8	Nut Metric Hex Stl., M8
1977-11	78-8054-8933-9	Spacer - 8.5/20X25 mm
1977-12	78-8054-8934-7	Upper Main Frame, Left
1977-13	78-8017-9318-9	Washer - Metric Plain, 8 mm
1977-14	78-8017-9301-5	Screw - Hex Hd. M8 X 25
1977-15	26-1002-5942-8	Screw - Hex Hd. M8 X 45
1977-16	26-1003-5833-7	Screw - Hexx Hd. 6 X 30
1977-17	78-8010-7157-8	Screw - Hex Hd. M4 X 10
1977-18	78-8005-5740-3	Washer - Metric Plain, 4 mm Nick.
1977-19	78-8010-7416-8	Nut - Metric, Hex Steel M4
1977-20	78-8054-8935-4	Spacer
1977-21	26-1000-0010-3	Washer - Flat M6
1977-22	78-8060-7862-8	Knob
1977-23	78-8060-7863-6	Stud - M6 X 20
1977-24	78-8060-7864-4	Plate, Right
1977-25	78-8060-7865-1	Side Flap Folder
1977-26	78-8060-7866-9	Plate, Left

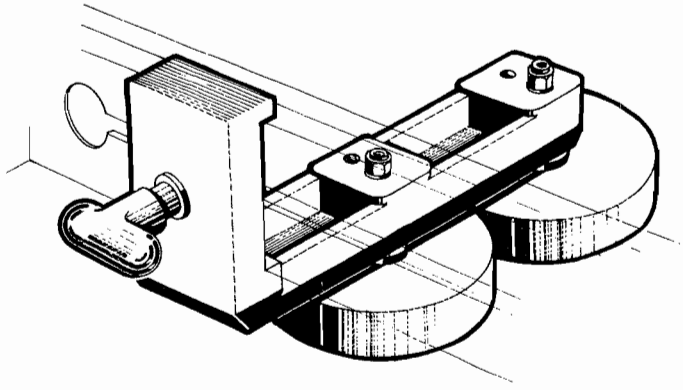

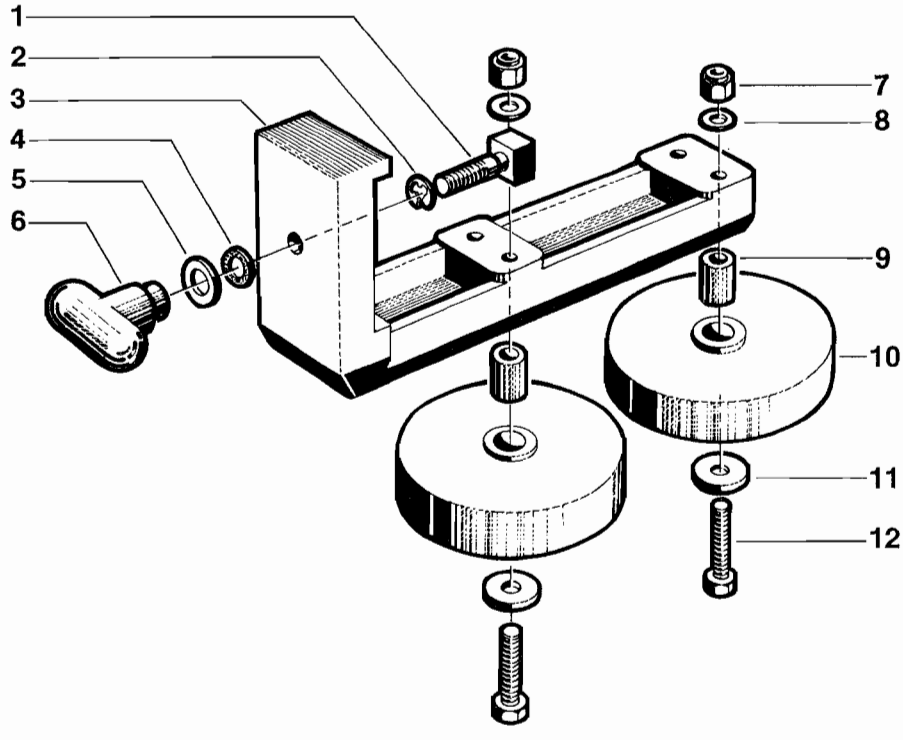

FIGURE 1978

Figure 1978

Ref. No.	3M Part No.	Description
1978-1	78-8057-5740-4	Screw - Special
1978-2	78-8016-5855-6	E - Ring 10 mm
1978-3	78-8060-7867-7	Mount - Side Rollers
1978-4	78-8017-9074-8	Washer - Nylon 15 mm
1978-5	78-8052-6566-3	Washer - Friction
1978-6	78-8052-6684-4	Knob
1978-7	78-8017-9313-0	Nut Self Locking M8 Nick. Pl.
1978-8	78-8017-9318-9	Washer - Metric Plain, 8 mm
1978-9	78-8055-0622-3	Bushing
1978-10	78-8054-8648-3	Pressure Roller
1978-11	78-8052-6703-2	Washer - Special
1978-12	26-1003-5845-1	Screw - Hex. Hd. M-8 X 40

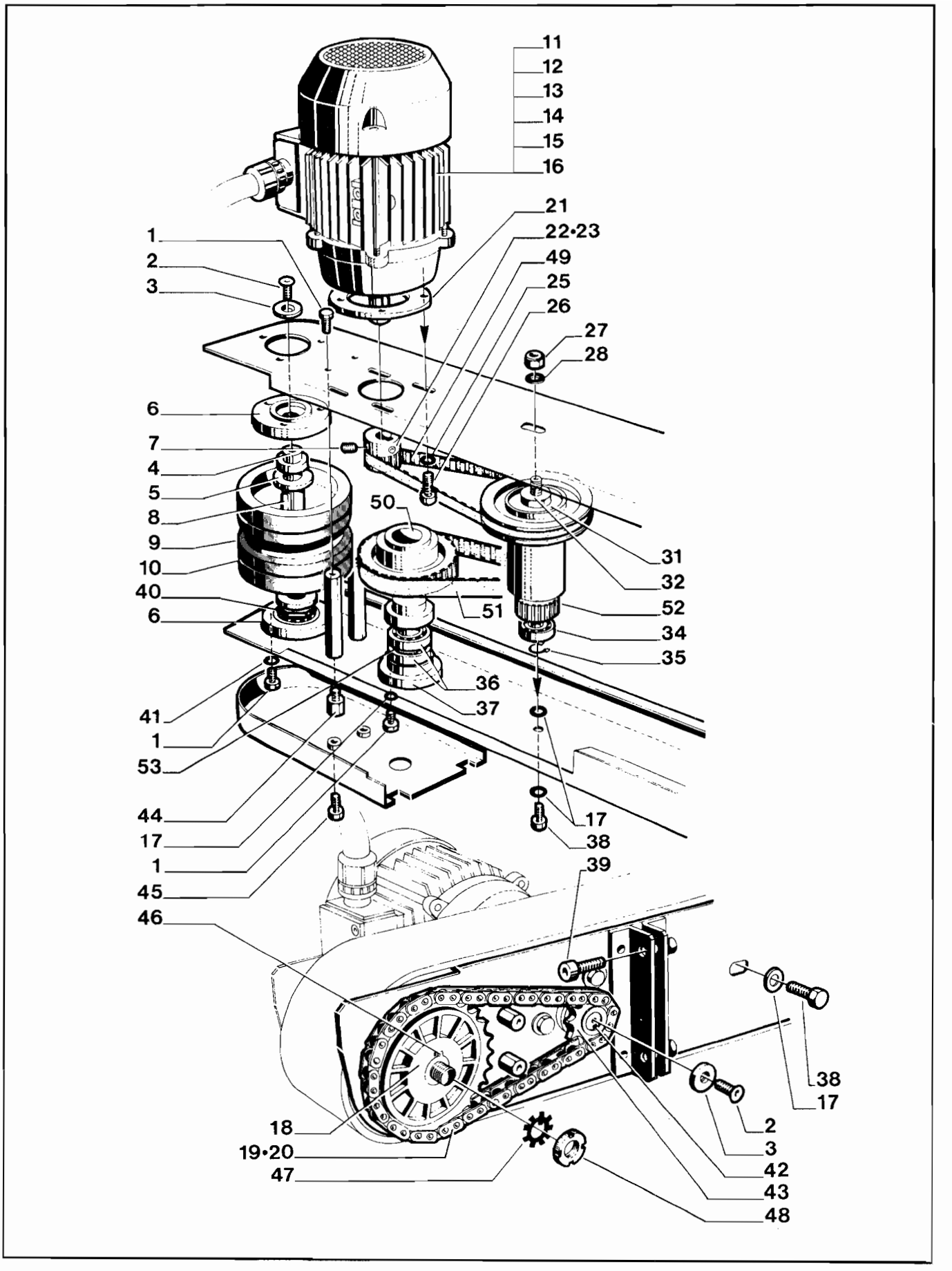
11
12
13
14
15
16
21
22•23
49
25
26
27
28
1
2
3
6
7
4
5
8
9
10
40
6
50
31
32
52
34
35
51
36
37
41
1
53
44
17
1
45
46
17
38
39
38
17
2
3
42
43
48
18
19•20
47

FIGURE 1979

Figure 1979

Ref. No.	3M Part No.	Description
1979-1	78-8010-7169-3	Screw - Metric, M6 X 12, Hex. Hd.
1979-2	26-0001-5862-1	Screw - Flat Hd. Soc., M5 X 12
1979-3	78-8054-8877-8	Washer, 5.5/20X4
1979-4	78-8054-8878-6	Shaft - Pulley Keyed
1979-5	78-8054-8879-4	Washer, /20.5 mm
1979-6	78-8060-7648-1	Bearing - Flanged
1979-7	26-1003-8816-9	Screw, Set M5 X 6
1979-8	78-8057-5739-6	Key, M5 X 5 X 30 mm
1979-9	78-8052-6717-2	Roller - Drive
1979-10	78-8052-6713-1	Ring - Rubber
1979-11	78-8055-0757-7	Motor 115V, 60 Hz, 1-Phase
1979-12	78-8060-7837-0	Motor 200V, 50/60 Hz, 3F H63
1979-13	78-8060-7838-8	Motor 220V, 60 Hz, 3F H63
1979-14	78-8060-7839-6	Motor 220/380V, 50 Hz, 3F H63
1979-15	78-8060-7840-4	Motor 240/415V, 50 Hz, 3F H63
1979-16	78-8060-7841-2	Motor 260/440V, 50 Hz, 3F H63
1979-17	78-8042-2919-9	Washer M6 Nick. Pl.
1979-18	78-8054-8881-0	Sprocket - 3/8" Pitch, 28 Teeth
1979-19	78-8054-8882-8	Chain - 3/8" Pitch, 43 Pitch Long
1979-20	78-8046-8269-4	Connecting - Link - 3/8" Pitch Chain
1979-21	78-8054-8883-6	Spacer - Motor
1979-22	78-8054-8884-4	Pulley - Timing 17 Teeth
1979-23	78-8054-8885-1	Pulley - Timing 14 Teeth, For 60 Hz Motor
1979-25	78-8028-8214-8	Washer
1979-26	78-8032-0382-3	Screw - Soc. Hex Hd. M5 X 16 Zinc. Pl.
1979-27	78-8017-9313-0	Nut - Self Locking M8 Nick. Pl.
1979-28	26-1004-5507-5	Washer M8
1979-31	78-8023-2544-5	Bearing - 6203-2RS
1979-32	78-8054-8887-7	Shaft - Pulley Wrap
1979-34	78-8023-2410-9	Bearing - 6000-2RS
1979-35	78-8016-5855-6	E - Ring 10 mm
1979-36	26-1000-6036-2	Bearing - 6003-2RS
1979-37	78-8054-8889-3	Support - Pulley Keyed
1979-38	78-8032-0375-7	Screw - Metric M6 X 16 Hex Hd.
1979-39	26-1003-7966-3	Screw - Soc. Hd. Hex Soc. M8 X 30
1979-40	78-8017-9096-1	Nut - Special M18 X 1
1979-41	26-1000-0010-3	Washer - Flat M6
1979-42	78-8028-8244-5	Key - 4 X 4 X 10 mm
1979-43	78-8054-8890-1	Sprocket - 3/8" Pitch, 10 Teeth
1979-44	78-8054-8891-9	Screw - Special
1979-45	26-1003-7948-1	Screw - Soc. Hd. Hex Soc. M5 X 10
1979-46	78-8046-8135-7	Key - 5 X 5 12 mm
1979-47	78-8057-5834-5	Tab Washer
1979-48	78-8057-5835-2	Centering Washer
1979-49	78-8059-5552-9	Timing Belt 180XL045
1979-50	78-8055-0825-2	Pulley - Keyed
1979-51	12-7996-1361-2	Belt - Timing, 187L075
1979-52	78-8060-7868-5	Pulley, Wrap
1979-53	78-8060-7547-5	Spacer - Bearing